(12) INTERNATIONAL APPLICATION PUBLISHED UNDER THE PATENT COOPERATION TREATY (PCT)

(19) World Intellectual Property Organization
International Bureau

(43) International Publication Date
14 August 2025 (14.08.2025)

WIPO | PCT

(10) International Publication Number
WO 2025/171189 A1

(51) International Patent Classification:
H04L 9/32 (2006.01) *G06Q 20/06* (2012.01)
G06Q 20/38 (2012.01)

(21) International Application Number:
PCT/US2025/014879

(22) International Filing Date:
06 February 2025 (06.02.2025)

(25) Filing Language: English

(26) Publication Language: English

(30) Priority Data:
63/550,966 07 February 2024 (07.02.2024) US
18/797,264 07 August 2024 (07.08.2024) US

(71) Applicant: **HAMSA PAY, INC.** [US/US]; 388 Market Street, Suite 1050, San Francisco, California 94111 (US).

(72) Inventors: **WU, Hongbing**; c/o Hamsa Pay, Inc., 388 Market Street, Suite 1050, San Francisco, California 94111 (US). **ZBAR, Adam**; c/o Hamsa Pay, Inc., 388 Market Street, Suite 1050, San Francisco, California 94111 (US). **LIN, Wenhao**; c/o Hamsa Pay, Inc., 388 Market Street, Suite 1050, San Francisco, California 94111 (US). **SUN, Chen**; c/o Hamsa Pay, Inc., 388 Market Street, Suite 1050, San Francisco, California 94111 (US).

(74) Agent: **GALLIANI, William S.** et al.; COOLEY LLP, 1299 Pennsylvania Ave. NW, Suite 700, Washington, District of Columbia 20004-2400 (US).

(81) Designated States *(unless otherwise indicated, for every kind of national protection available)*: AE, AG, AL, AM, AO, AT, AU, AZ, BA, BB, BG, BH, BN, BR, BW, BY, BZ, CA, CH, CL, CN, CO, CR, CU, CV, CZ, DE, DJ, DK, DM, DO, DZ, EC, EE, EG, ES, FI, GB, GD, GE, GH, GM, GT, HN, HR, HU, ID, IL, IN, IQ, IR, IS, IT, JM, JO, JP, KE, KG, KH, KN, KP, KR, KW, KZ, LA, LC, LK, LR, LS, LU, LY, MA, MD, MG, MK, MN, MU, MW, MX, MY, MZ, NA, NG, NI, NO, NZ, OM, PA, PE, PG, PH, PL, PT, QA, RO, RS, RU, RW, SA, SC, SD, SE, SG, SK, SL, ST, SV, SY, TH, TJ, TM, TN, TR, TT, TZ, UA, UG, US, UY, UZ, VC, VN, WS, ZA, ZM, ZW.

(84) Designated States *(unless otherwise indicated, for every kind of regional protection available)*: ARIPO (BW, CV, GH, GM, KE, LR, LS, MW, MZ, NA, RW, SC, SD, SL, ST, SZ, TZ, UG, ZM, ZW), Eurasian (AM, AZ, BY, KG, KZ, RU, TJ, TM), European (AL, AT, BE, BG, CH, CY, CZ, DE, DK, EE, ES, FI, FR, GB, GR, HR, HU, IE, IS, IT, LT, LU, LV, MC, ME, MK, MT, NL, NO, PL, PT, RO, RS, SE, SI, SK, SM, TR), OAPI (BF, BJ, CF, CG, CI, CM, GA, GN, GQ, GW, KM, ML, MR, NE, SN, TD, TG).

(54) Title: NETWORKED SYSTEM FOR PRIVATE ASSET MANAGEMENT ACROSS ON CHAIN AND OFF CHAIN MACHINES

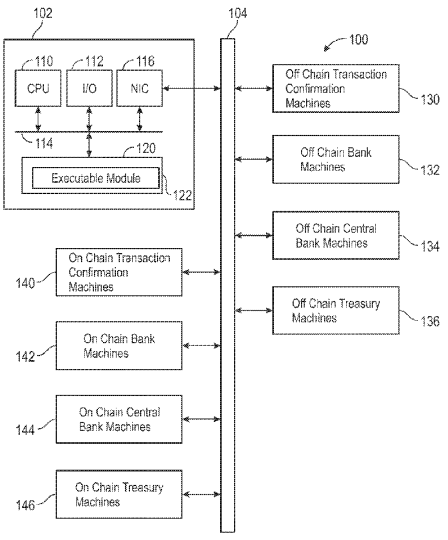

FIG. 1

(57) Abstract: A system has off chain transaction confirmation machines exchanging private transaction messages. Off chain zero knowledge proof machines are in communication with the off chain transaction confirmation machines. Off chain bank machines are in communication with the zero knowledge proof machines via proprietary code associated with the off chain zero knowledge proof machines. Off chain central bank machines are in communication with the off chain bank machines to validate a network transaction and form a private network transaction record and a public network transaction record. On chain bank machines and on chain central bank machines record the public network transaction record in a distributed ledger.

WO 2025/171189 A1

[Continued on next page]

Declarations under Rule 4.17:

— *as to applicant's entitlement to apply for and be granted a patent (Rule 4.17(ii))*

— *as to the applicant's entitlement to claim the priority of the earlier application (Rule 4.17(iii))*

Published:

— *with international search report (Art. 21(3))*