(12) INTERNATIONAL APPLICATION PUBLISHED UNDER THE PATENT COOPERATION TREATY (PCT)

CORRECTED VERSION

(19) World Intellectual Property Organization
International Bureau

(43) International Publication Date
8 August 2002 (08.08.2002)

PCT

(10) International Publication Number
WO 02/061362 A2

(51) International Patent Classification[7]: F41A

(21) International Application Number: PCT/US01/49934

(22) International Filing Date: 25 October 2001 (25.10.2001)

(25) Filing Language: English

(26) Publication Language: English

(30) Priority Data:
60/243,709 27 October 2000 (27.10.2000) US
09/834,821 13 April 2001 (13.04.2001) US

(71) Applicant: **UNITED DEFENSE LP** [US/US]; 1525 Wilson Boulevard, Suite 700, Arlington, VA 22209 (US).

(72) Inventors: **STAIERT, Richard**; c/o United Defense LP, 1525 Wilson Boulevard, Suite 700, Arlington, VA 22209 (US). **STRATTON, Robert, B.**; c/o United Defense LP, 1525 Wilson Boulevard, Suite 700, Arlington, VA 22209 (US).

(74) Agents: **PATTERSON, James, H.** et al.; Patterson, Thuent , Skaar & Christensen, P.A, 4800 IDS Center, 80 South 8th Street, Minneapolis, MN 55402-2100 (US).

(81) Designated States *(national)*: AE, AG, AL, AM, AT, AU, AZ, BA, BB, BG, BR, BY, BZ, CA, CH, CN, CO, CR, CU, CZ, DE, DK, DM, DZ, EE, ES, FI, GB, GD, GE, GH, GM, HR, HU, ID, IL, IN, IS, JP, KE, KG, KP, KR, KZ, LC, LK, LR, LS, LT, LU, LV, MA, MD, MG, MK, MN, MW, MX, MZ, NO, NZ, PL, PT, RO, RU, SD, SE, SG, SI, SK, SL, TJ, TM, TR, TT, TZ, UA, UG, UZ, VN, YU, ZA, ZW.

(84) Designated States *(regional)*: ARIPO patent (GH, GM, KE, LS, MW, MZ, SD, SL, SZ, TZ, UG, ZW), Eurasian patent (AM, AZ, BY, KG, KZ, MD, RU, TJ, TM), European patent (AT, BE, CH, CY, DE, DK, ES, FI, FR, GB, GR, IE, IT, LU, MC, NL, PT, SE, TR), OAPI patent (BF, BJ, CF, CG, CI, CM, GA, GN, GW, ML, MR, NE, SN, TD, TG).

Published:
— *without international search report and to be republished upon receipt of that report*

(48) Date of publication of this corrected version:
21 November 2002

(15) Information about Correction:
see PCT Gazette No. 47/2002 of 21 November 2002, Section II

For two-letter codes and other abbreviations, refer to the "Guidance Notes on Codes and Abbreviations" appearing at the beginning of each regular issue of the PCT Gazette.

(54) Title: HIGH-MOBILITY ARTILLERY CANNON SYSTEM

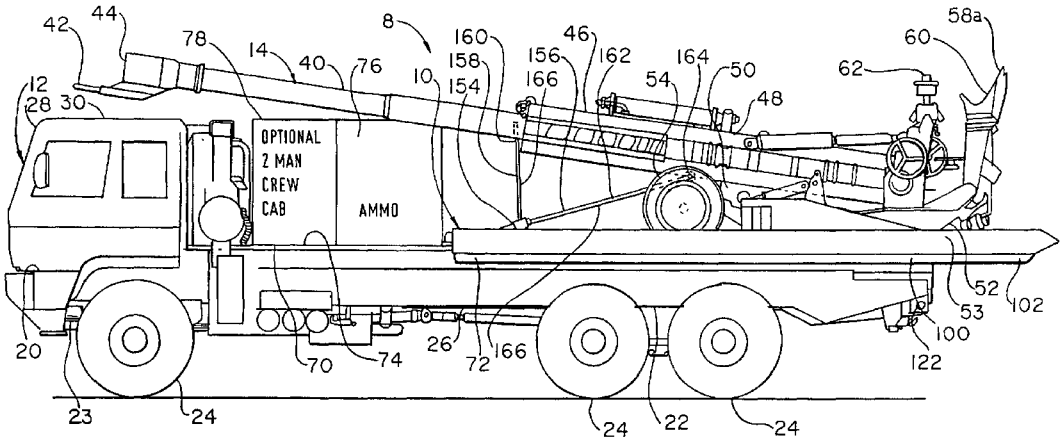

(57) Abstract: A high-mobility artillery cannon system transportable with the cargo envelop of a transport aircraft, includes a lightweight field howitzer, a medium tactical vehicle, and a bed disposable on the vehicle, the bed for receiving and supporting the howitzer such that the vehicle with the howitzer disposed on the bed is receivable within an envelop having substantially the dimensions of the cargo envelop defined within the C-130 type transport aircraft. A method of configuring a cannon system for transport the C-130 type transport aircraft is included.

WO 02/061362 A2