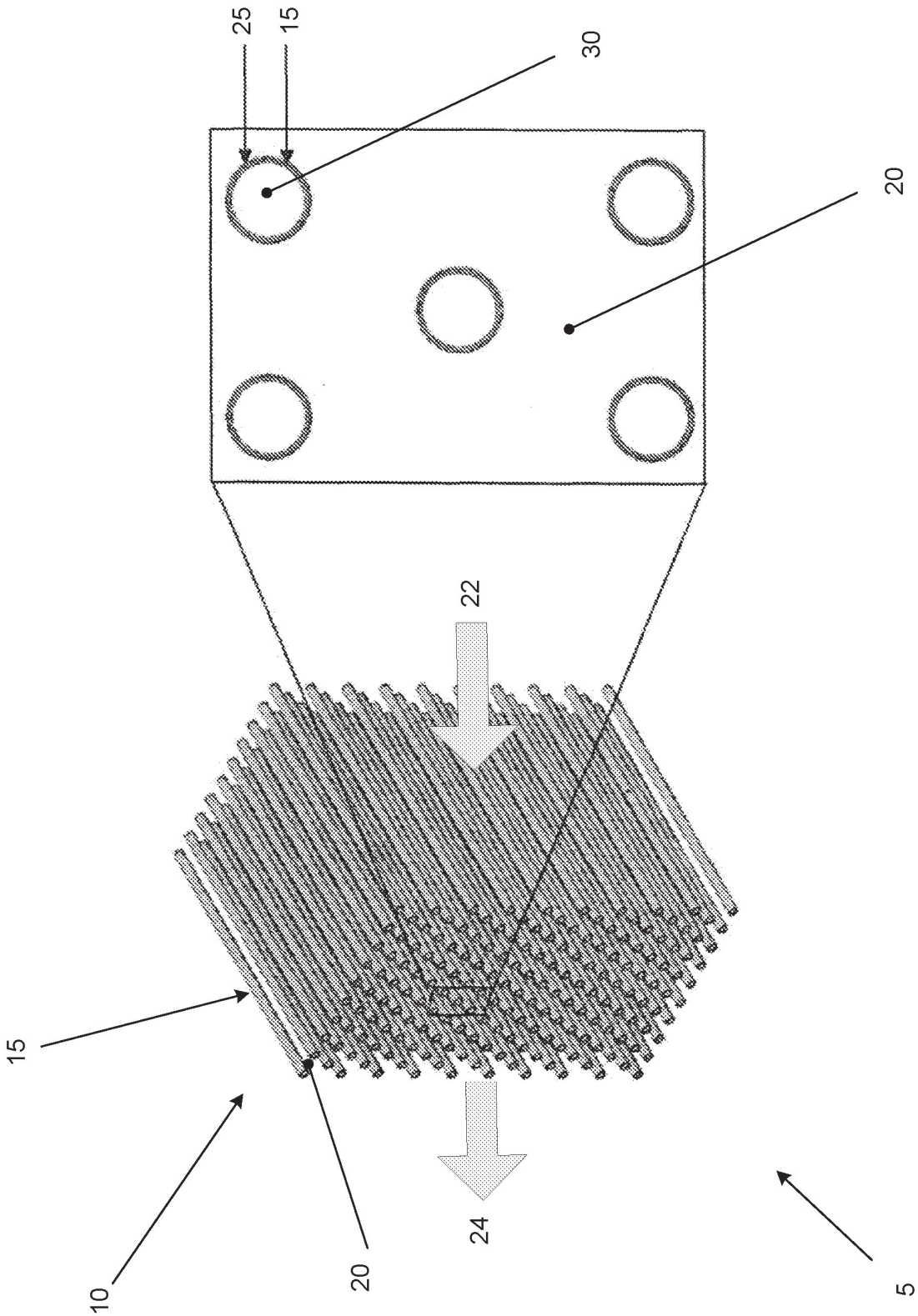

Figure 1

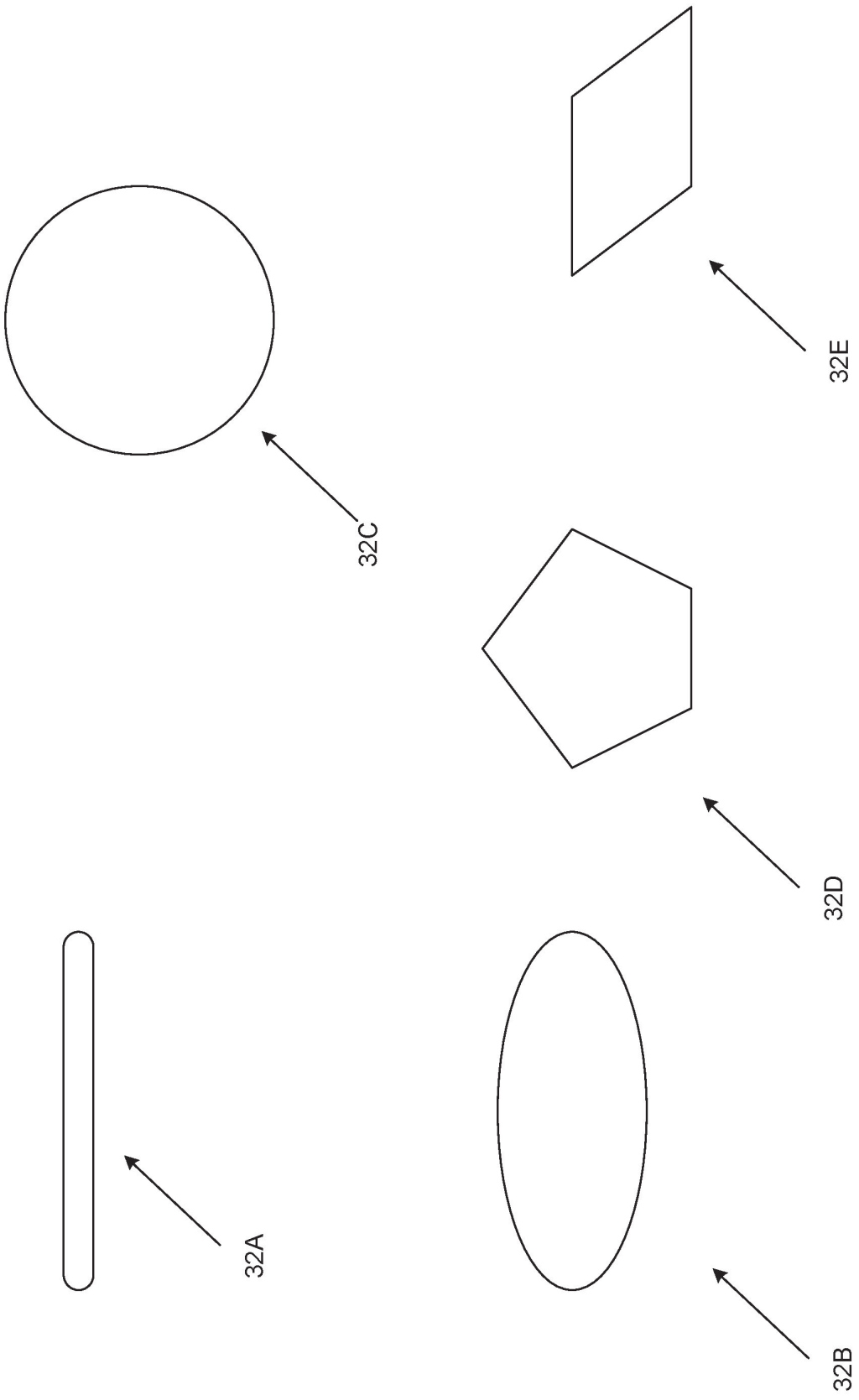

Figure 2

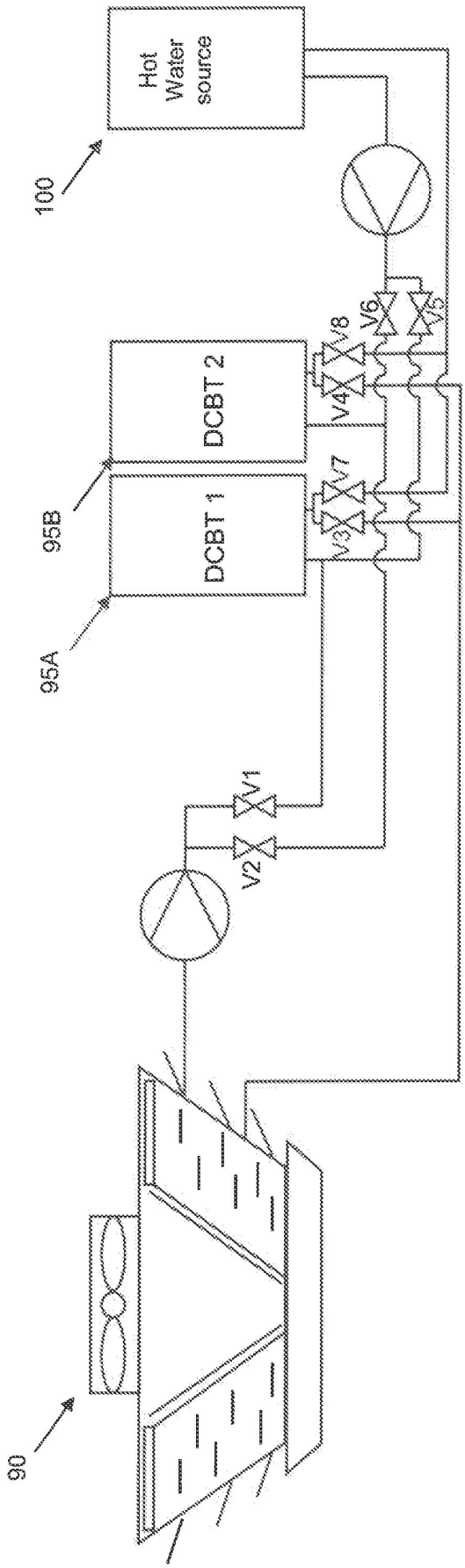
Hot Water source
100
DCBT 2
DCBT 1
95B
95A
V1
V2
V3
V4
V5
V6
V7
V8
90
85

Figure 3

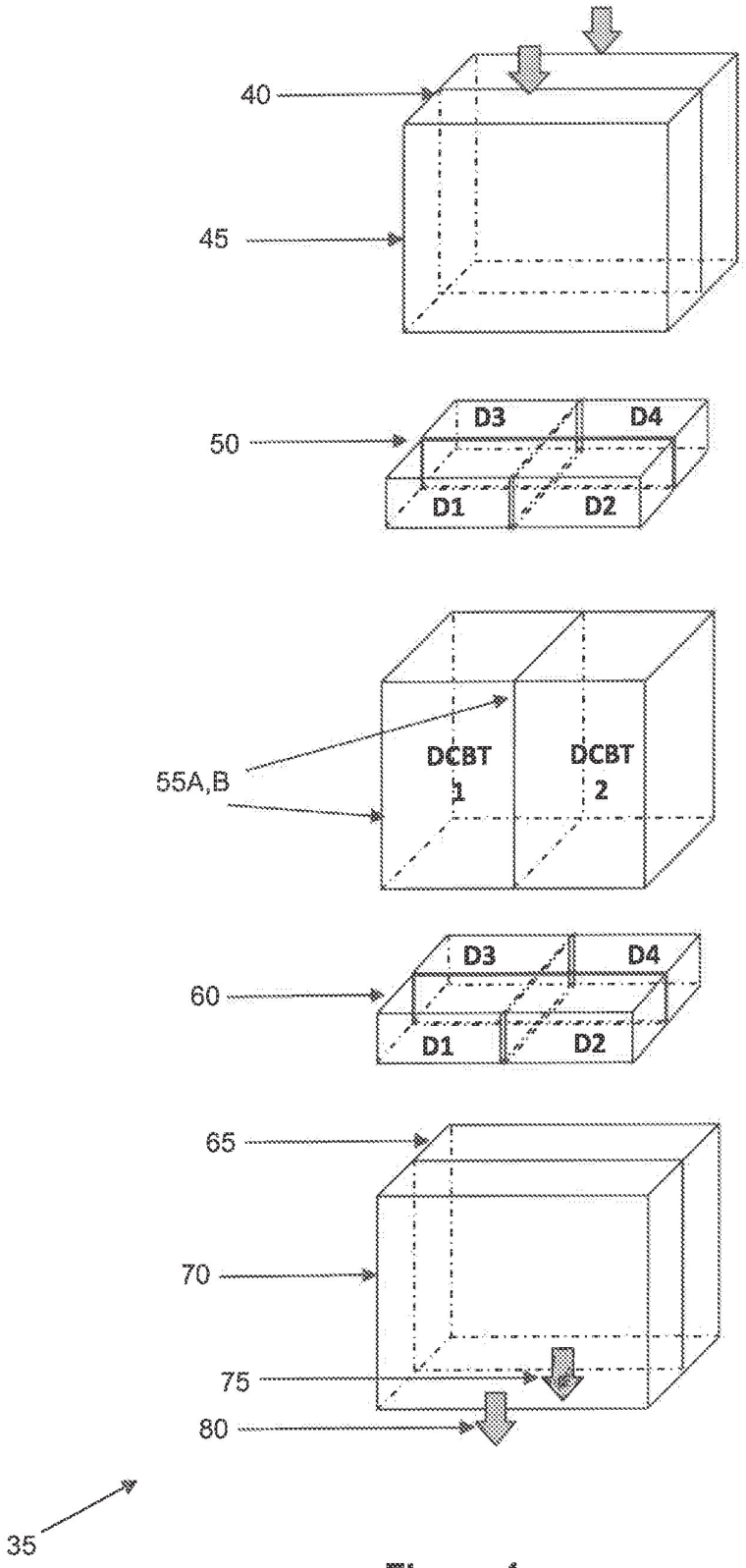

Figure 4

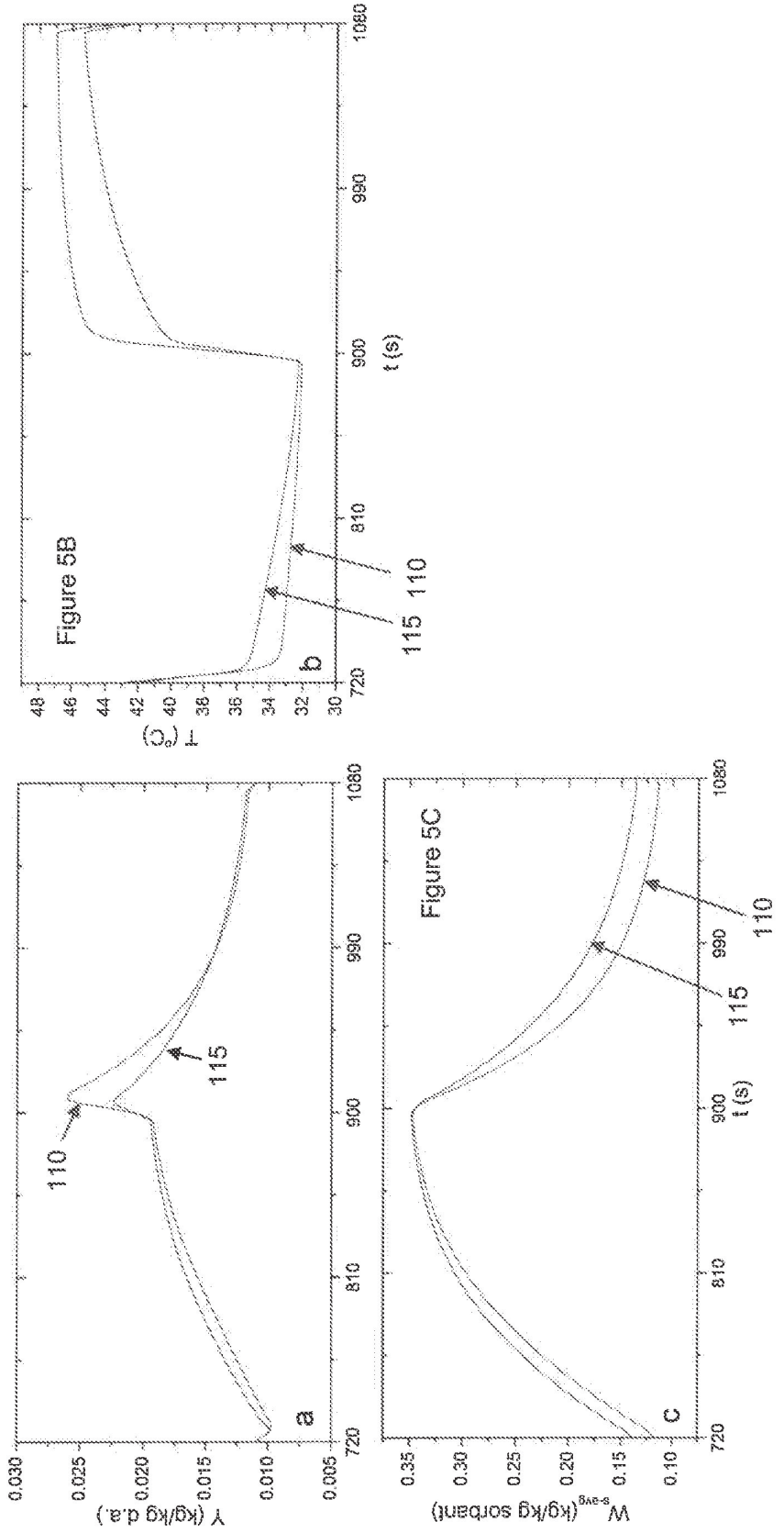
Figure 5B
T (°C)
t (s)
a
b
c
110
115
Figure 5C
Y (kg/kg d.a.)
W s-avg (kg/kg sorbant)

Figure 5

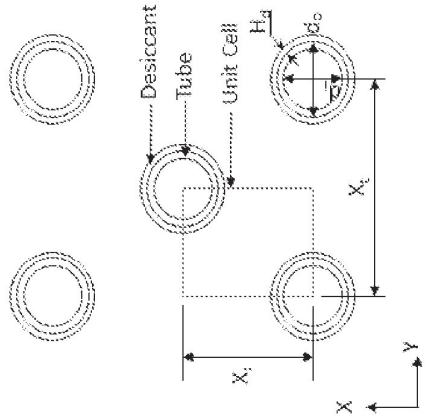

Figure 6A

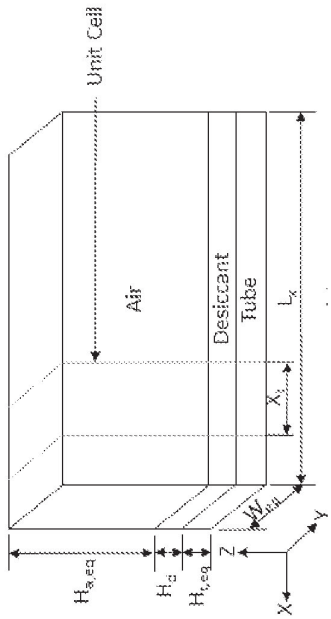

Figure 6B