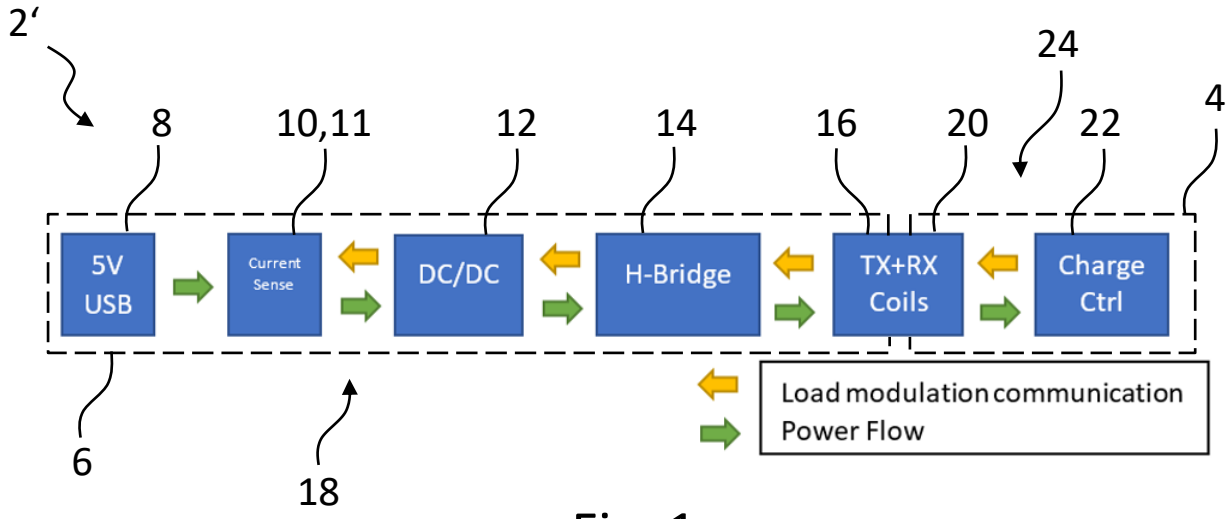
2'
8
10,11
12
14
16
20
24
22
4
5V USB
Current Sense
DC/DC
H-Bridge
TX+RX Coils
Charge Ctrl
6
18
Load modulation communication
Power Flow

Fig. 1

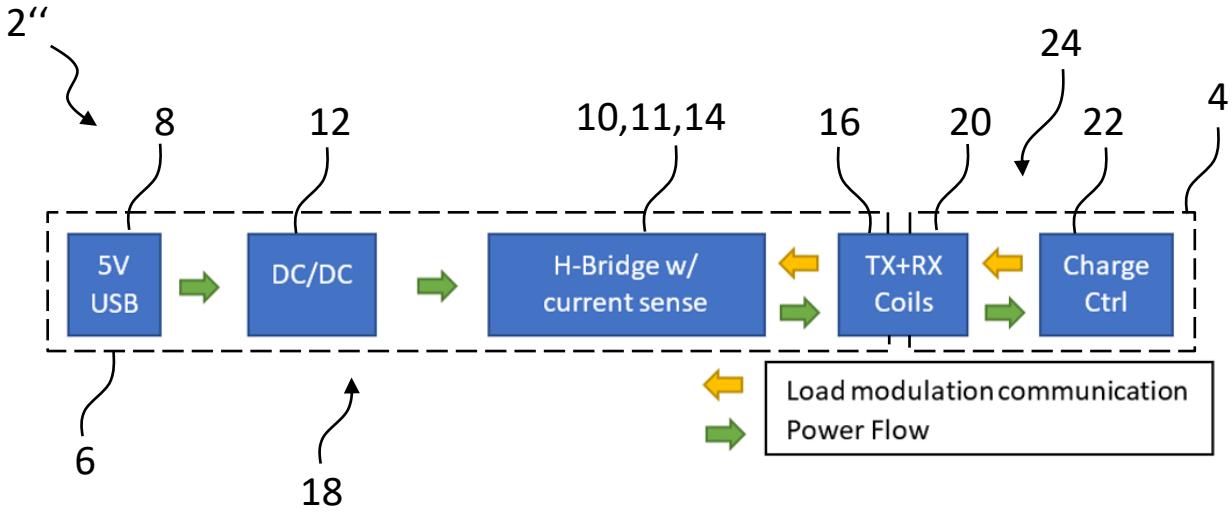
2''
8
12
10,11,14
16
20
24
22
4
5V USB
DC/DC
H-Bridge w/ current sense
TX+RX Coils
Charge Ctrl
6
18
Load modulation communication
Power Flow

Fig. 2

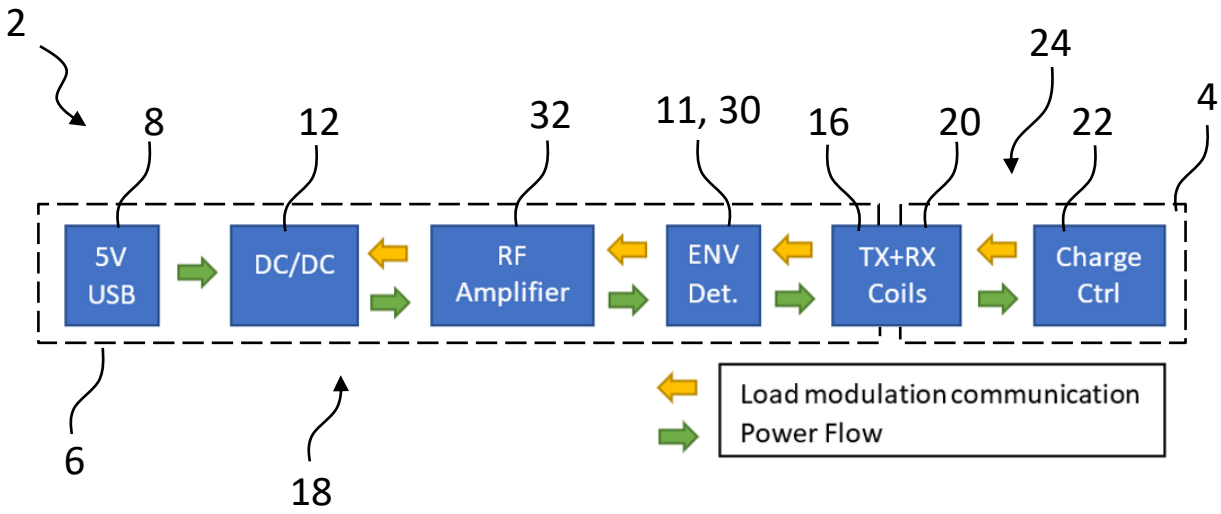
2
8
12
32
11, 30
16
20
24
22
4
5V USB
DC/DC
RF Amplifier
ENV Det.
TX+RX Coils
Charge Ctrl
6
18
Load modulation communication
Power Flow

Fig. 3

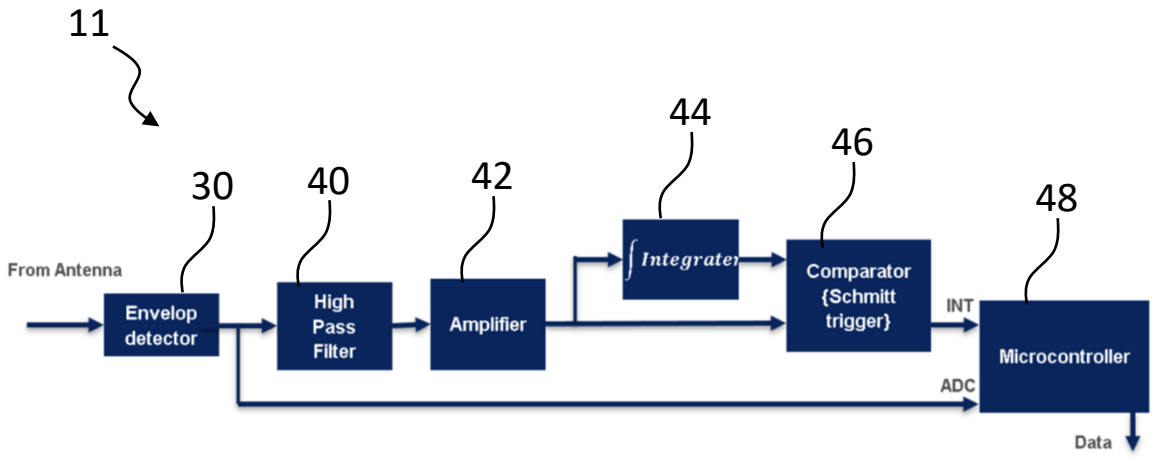
11
30
40
42
44
46
48
From Antenna
Envelop detector
High Pass Filter
Amplifier
∫ Integrater
Comparator {Schmitt trigger}
INT
Microcontroller
ADC
Data

Fig. 4

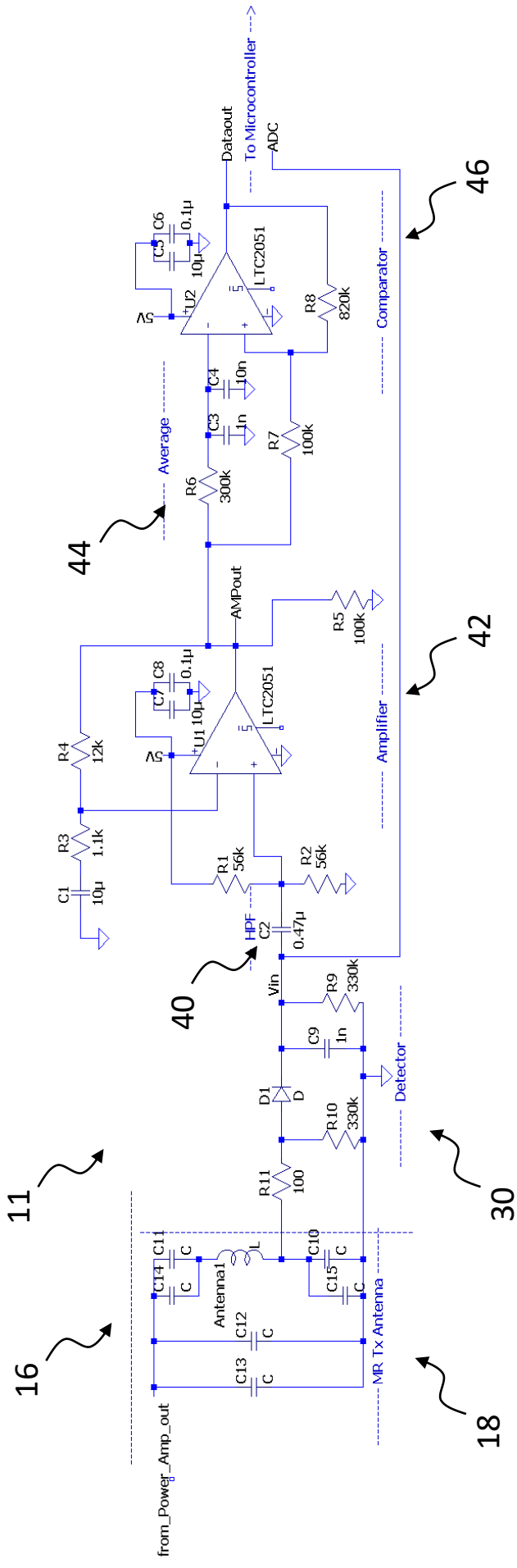

from_Power_Amp_out
MR Tx Antenna
Antenna1
C11
C14
C12
C13
C10
C15
L
C
R11
100
R10
330k
D1
D
C9
1n
R9
330k
Vin
Detector
HPF
C2
0.47µ
R1
56k
R2
56k
C1
10µ
R3
1.1k
R4
12k
U1
LTC2051
C7
C8
0.1µ
10µ
5V
AMPout
R5
100k
Amplifier
Average
R6
300k
C3
1n
C4
10n
R7
100k
U2
LTC2051
C5
C6
0.1µ
10µ
5V
R8
820k
Comparator
Dataout
To Microcontroller
ADC
11
16
18
30
40
42
44
46

Fig. 5

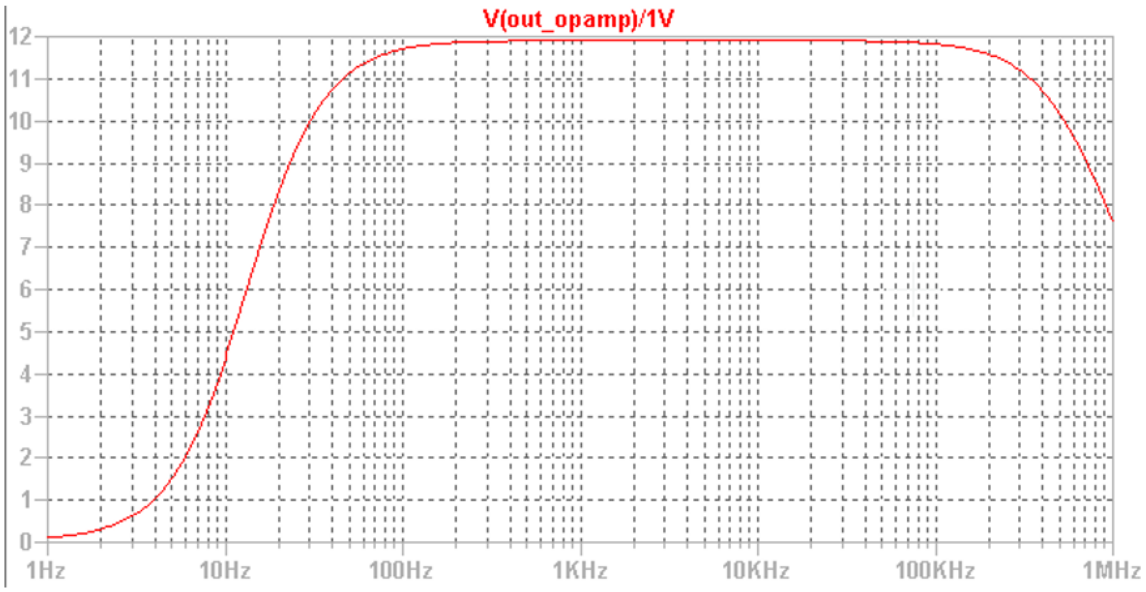
V(out_opamp)/1V
12
11
10
9
8
7
6
5
4
3
2
1
0
1Hz
10Hz
100Hz
1KHz
10KHz
100KHz
1MHz

Fig. 6

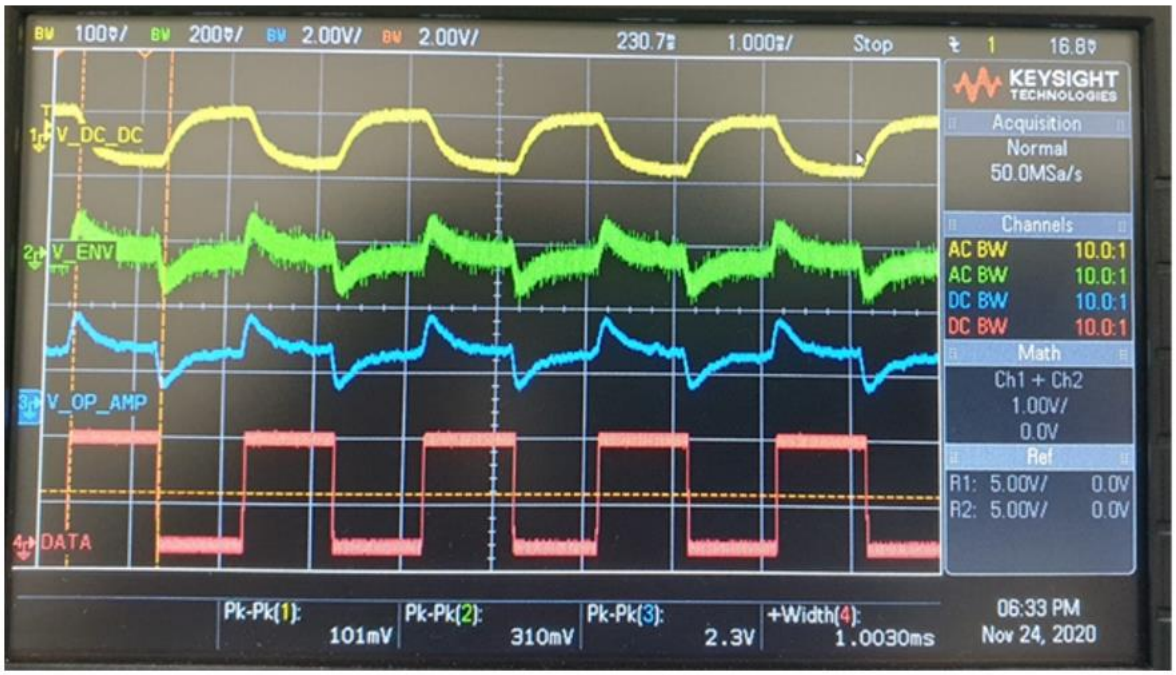
100mV/
200mV/
2.00V/
2.00V/
230.7ns
1.000ns/
Stop
1
16.8ns
KEYSIGHT TECHNOLOGIES
Acquisition
Normal
50.0MSa/s
Channels
AC BW 10.0:1
AC BW 10.0:1
DC BW 10.0:1
DC BW 10.0:1
Math
Ch1 + Ch2
1.00V/
0.0V
Ref
R1: 5.00V/ 0.0V
R2: 5.00V/ 0.0V
V_DC_DC
V_ENV
V_OP_AMP
DATA
Pk-Pk(1): 101mV
Pk-Pk(2): 310mV
Pk-Pk(3): 2.3V
+Width(4): 1.0030ms
06:33 PM
Nov 24, 2020

Fig. 7