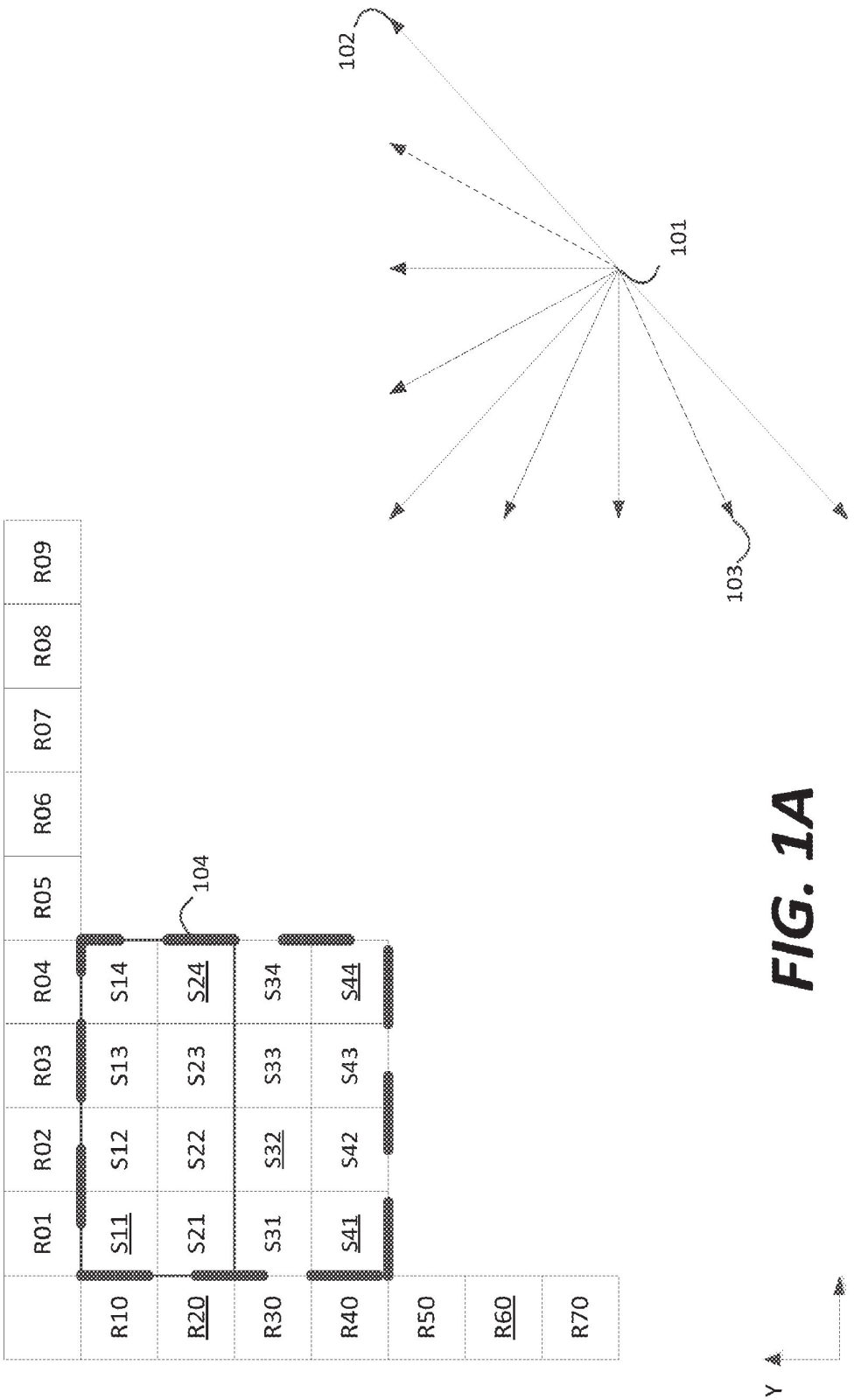
R01
R02
R03
R04
R05
R06
R07
R08
R09
R10
R20
R30
R40
R50
R60
R70
S11
S12
S13
S14
S21
S22
S23
S24
S31
S32
S33
S34
S41
S42
S43
S44
104
101
102
103
Y
X

FIG. 1A

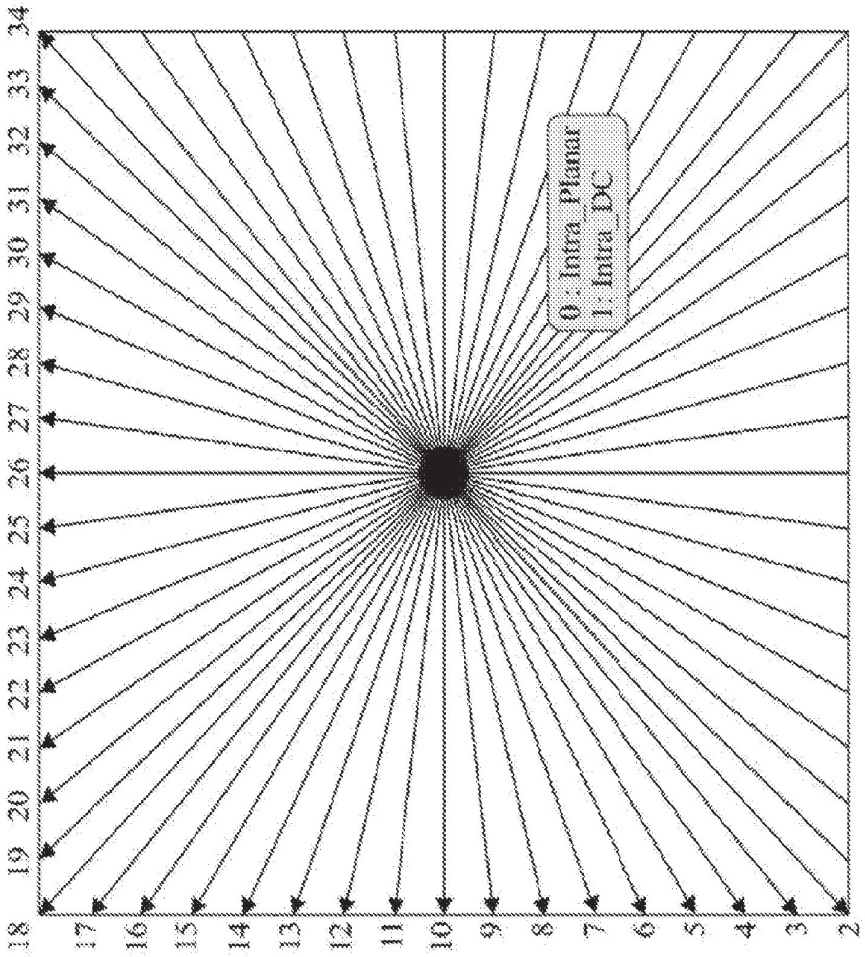
0: Intra_Planar
1: Intra_DC
18
19
20
21
22
23
24
25
26
27
28
29
30
31
32
33
34
17
16
15
14
13
12
11
10
9
8
7
6
5
4
3
2

FIG. 1B

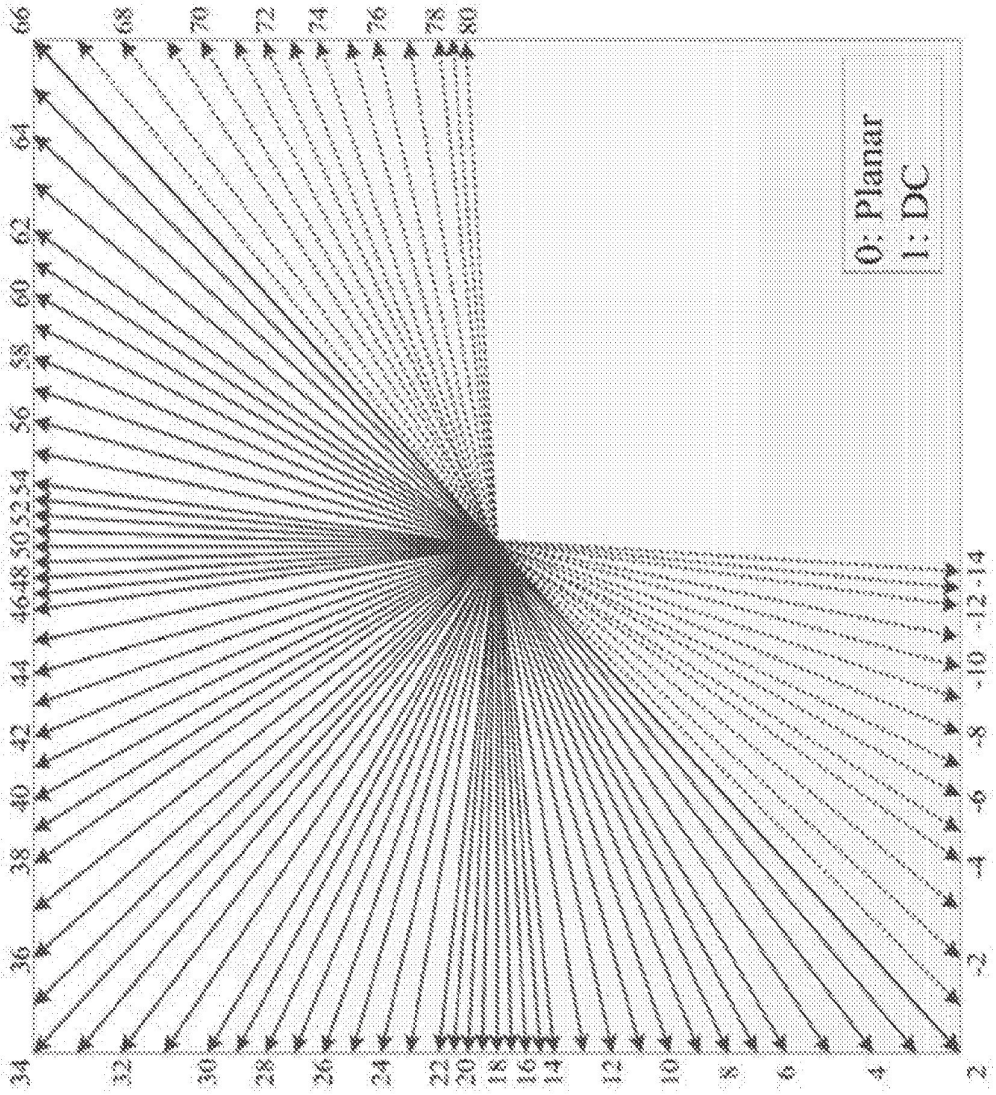
0: Planar
1: DC
34
32
30
28
26
24
22
20
18
16
14
12
10
8
6
4
2
66
68
70
72
74
76
78
80
36
38
40
42
44
46
48
50
52
54
56
58
60
62
64
-2
-4
-6
-8
-10
-12
-14

FIG. 1C

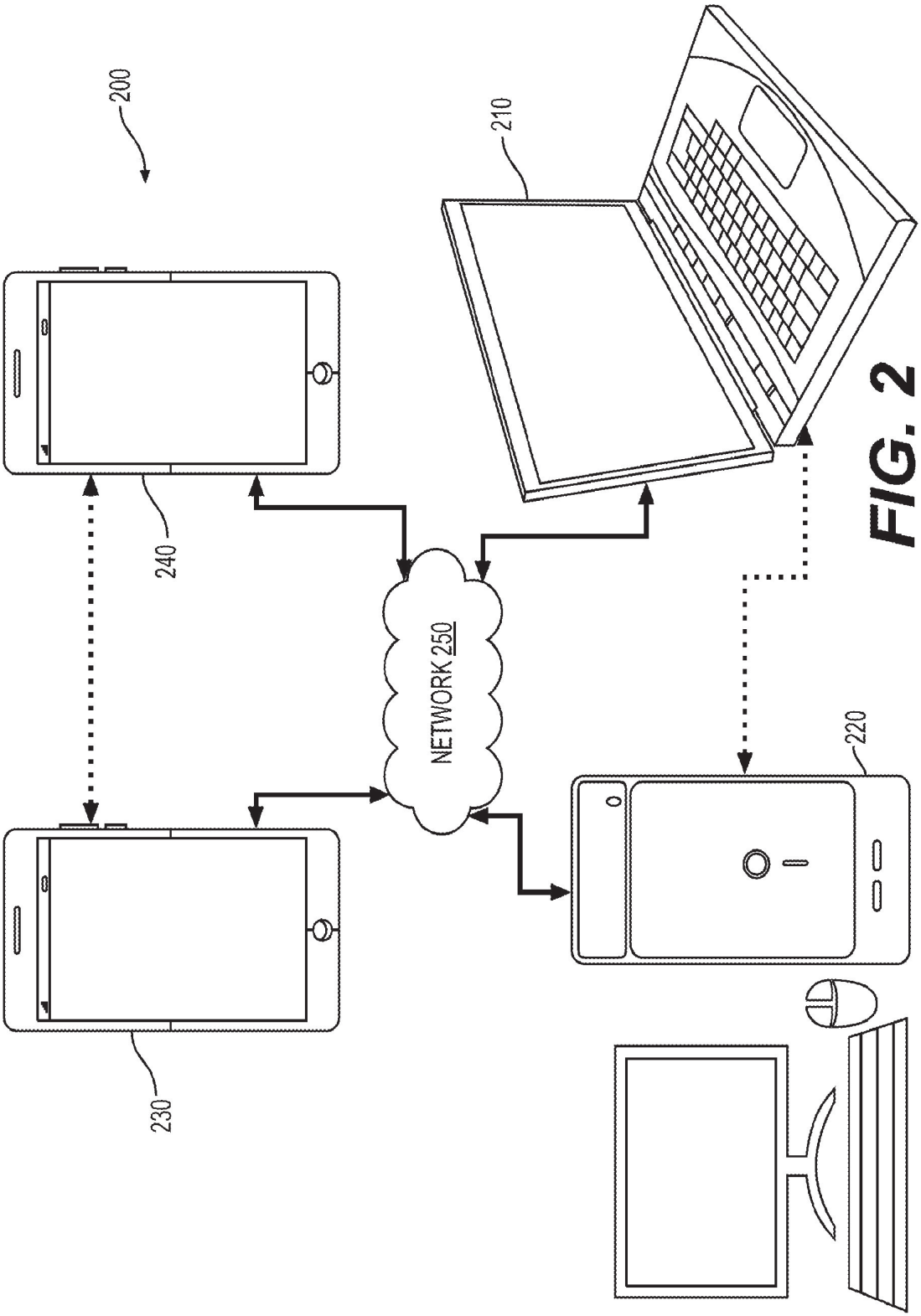


FIG. 2

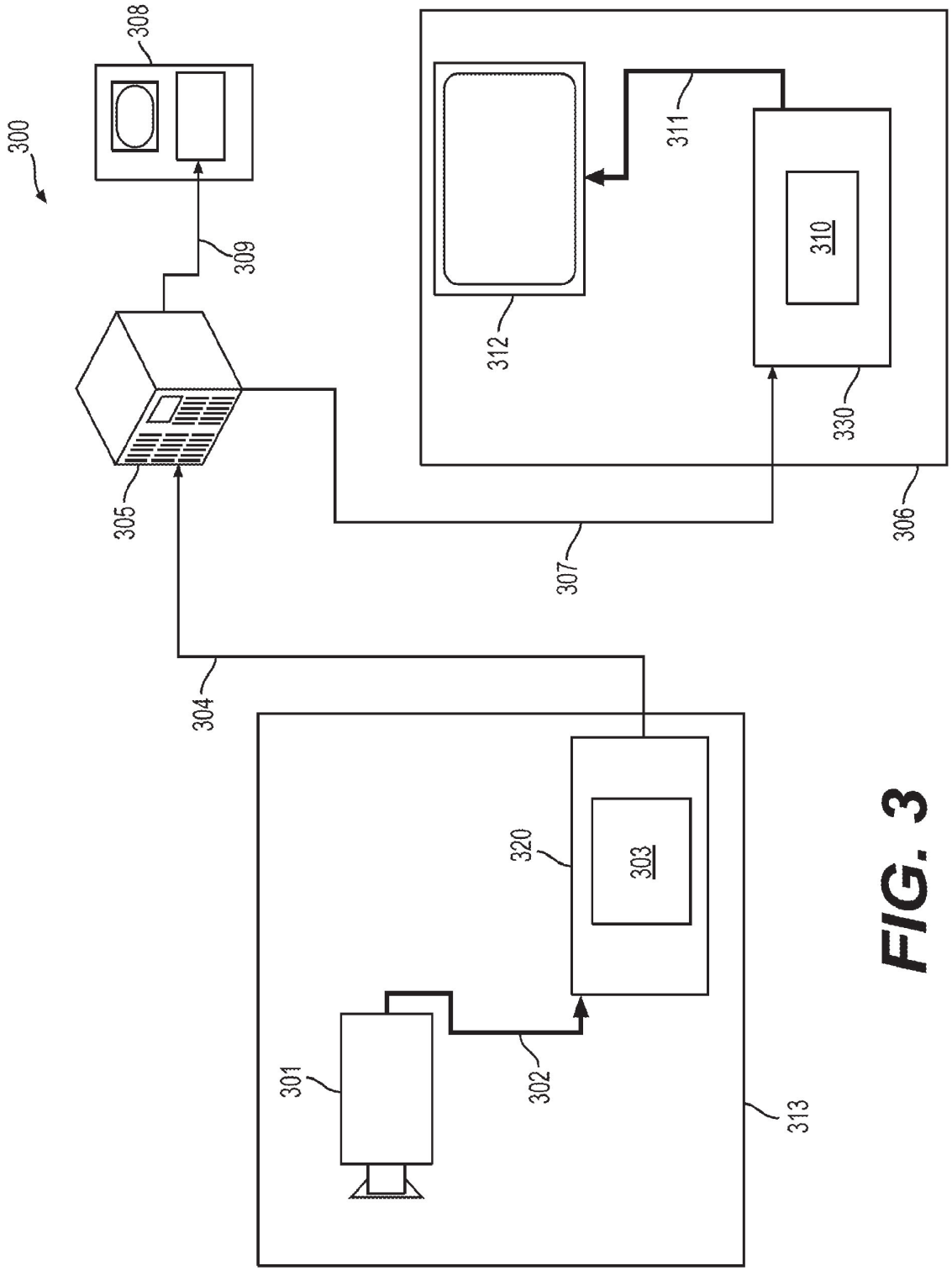


FIG. 3

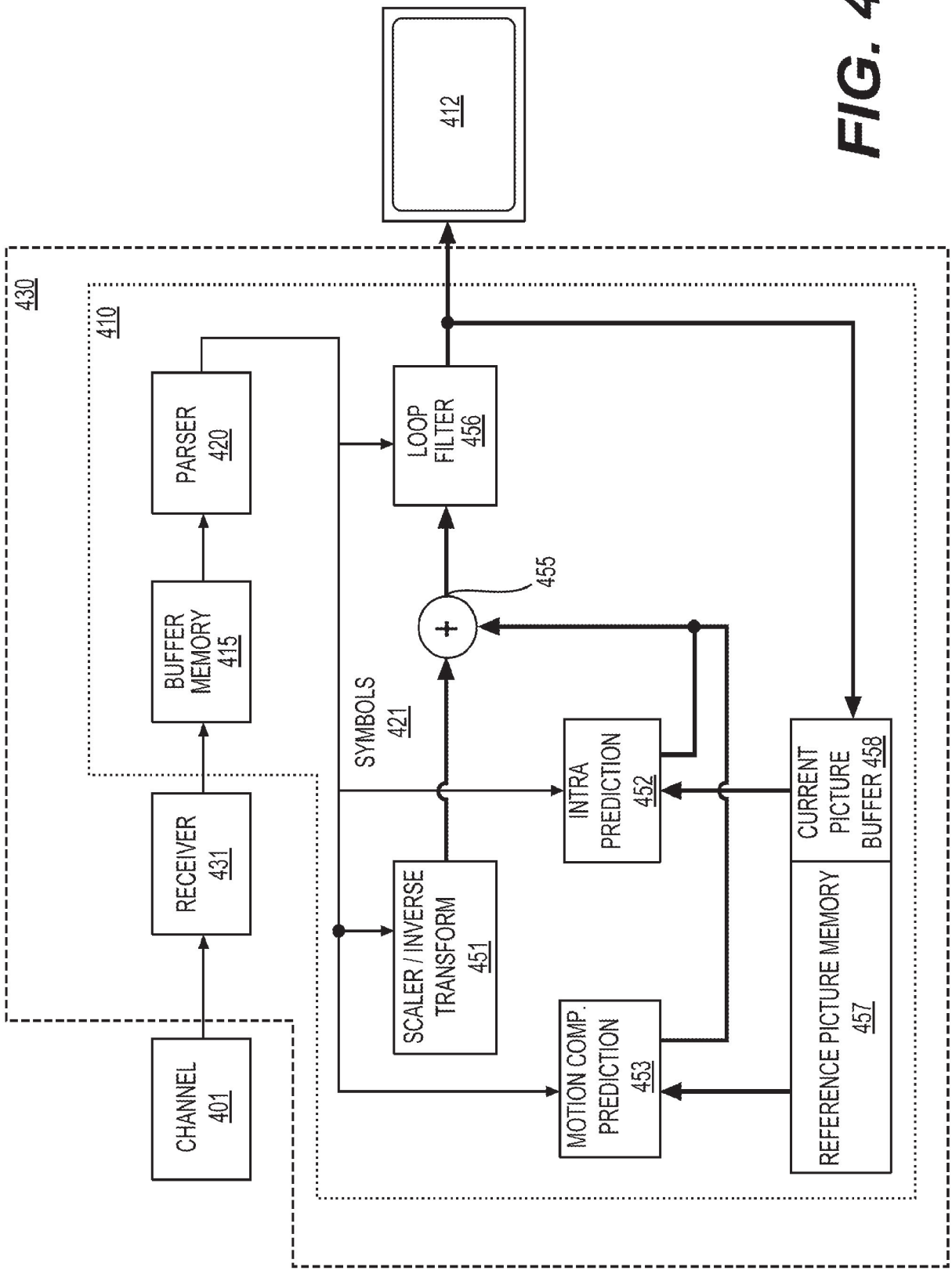
412
430
410
PARSER 420
LOOP FILTER 456
BUFFER MEMORY 415
455
SYMBOLS 421
INTRA PREDICTION 452
CURRENT PICTURE BUFFER 458
RECEIVER 431
SCALER / INVERSE TRANSFORM 451
MOTION COMP. PREDICTION 453
REFERENCE PICTURE MEMORY 457
CHANNEL 401

FIG. 4

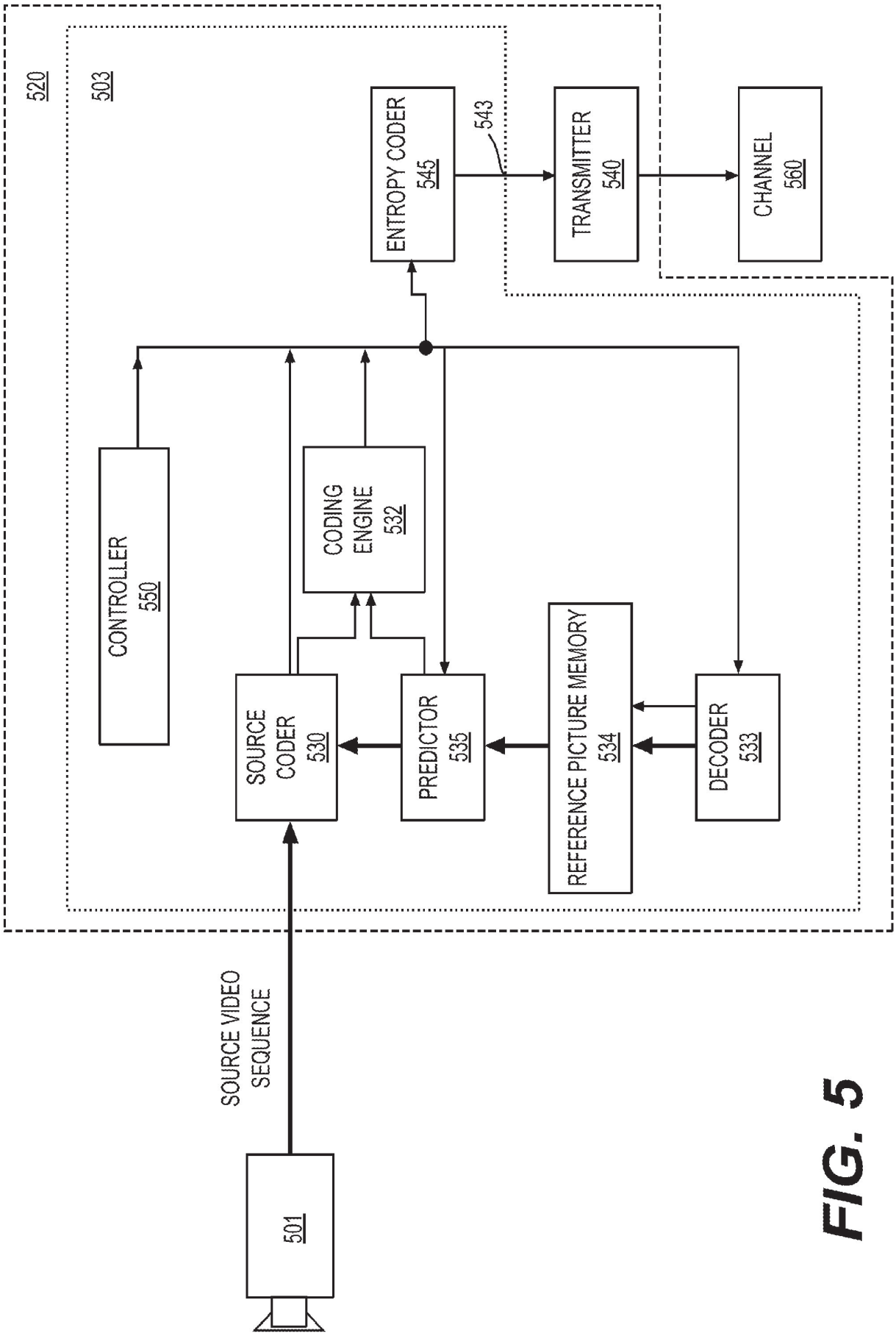
520
503
ENTROPY CODER
545
543
TRANSMITTER
540
CHANNEL
560
CONTROLLER
550
CODING
ENGINE
532
SOURCE
CODER
530
PREDICTOR
535
REFERENCE PICTURE MEMORY
534
DECODER
533
SOURCE VIDEO
SEQUENCE
501

FIG. 5

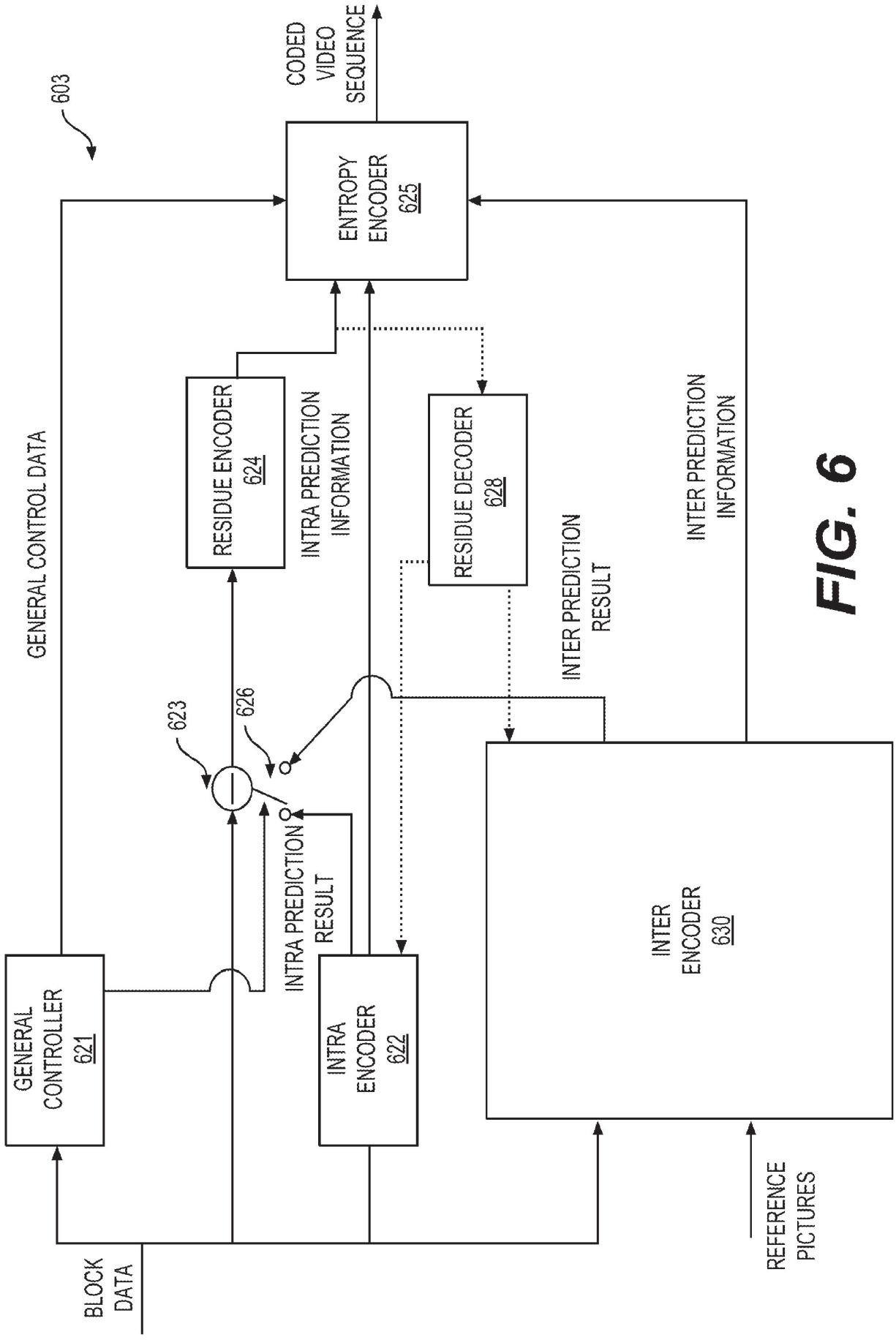
603
CODED VIDEO SEQUENCE
ENTROPY ENCODER 625
GENERAL CONTROL DATA
RESIDUE ENCODER 624
INTRA PREDICTION INFORMATION
RESIDUE DECODER 628
INTER PREDICTION RESULT
INTER PREDICTION INFORMATION
623
626
INTRA PREDICTION RESULT
GENERAL CONTROLLER 621
INTRA ENCODER 622
INTER ENCODER 630
BLOCK DATA
REFERENCE PICTURES

FIG. 6

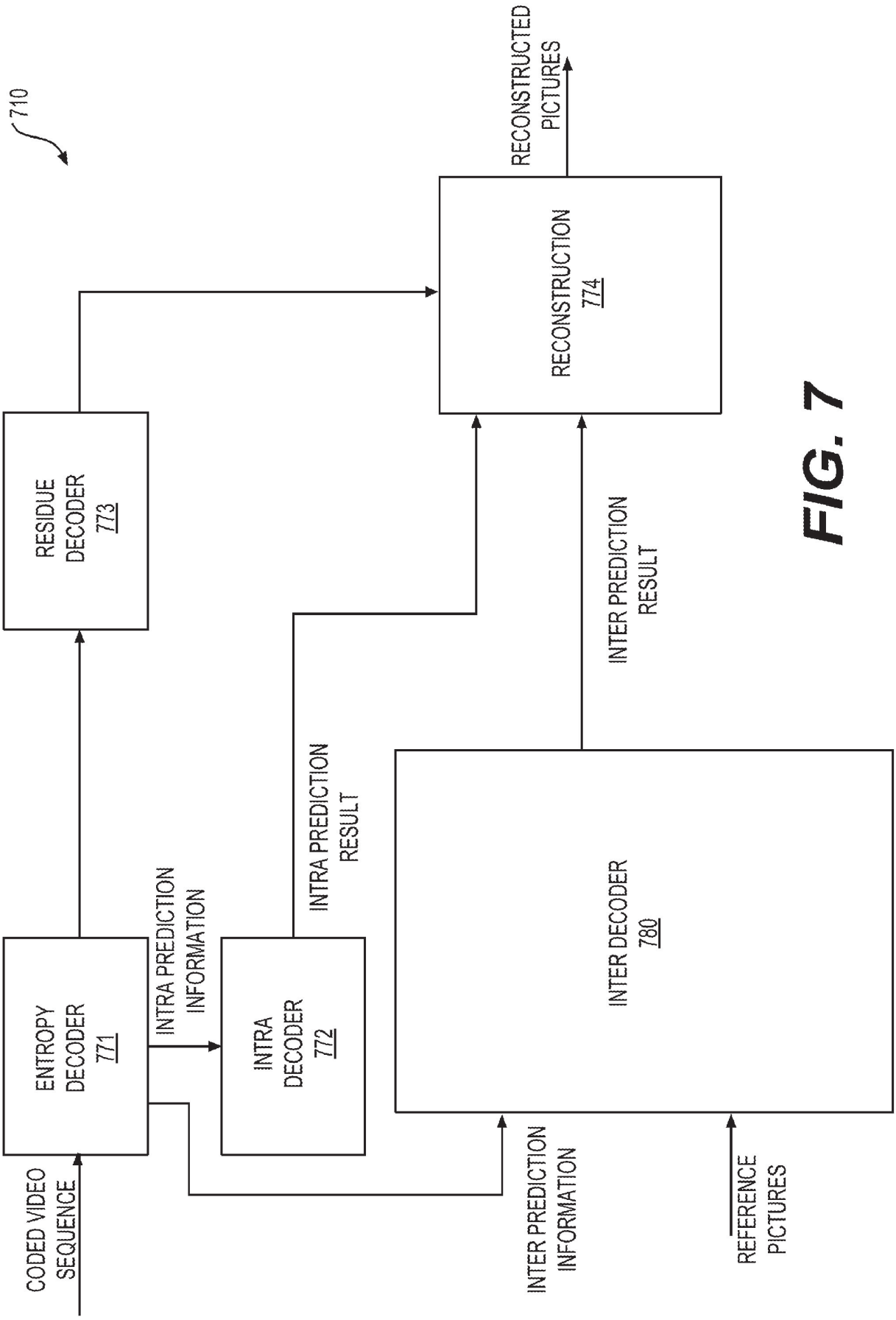
710
CODED VIDEO SEQUENCE
ENTROPY DECODER 771
RESIDUE DECODER 773
INTRA PREDICTION INFORMATION
INTRA DECODER 772
INTRA PREDICTION RESULT
INTER DECODER 780
INTER PREDICTION INFORMATION
REFERENCE PICTURES
INTER PREDICTION RESULT
RECONSTRUCTION 774
RECONSTRUCTED PICTURES

FIG. 7

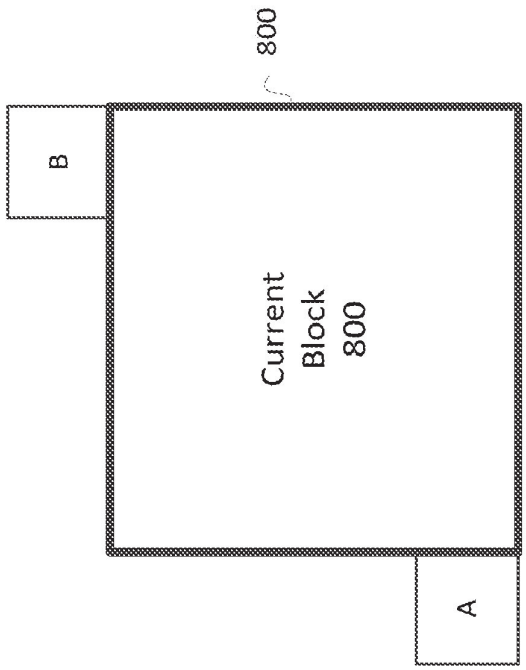


FIG. 8

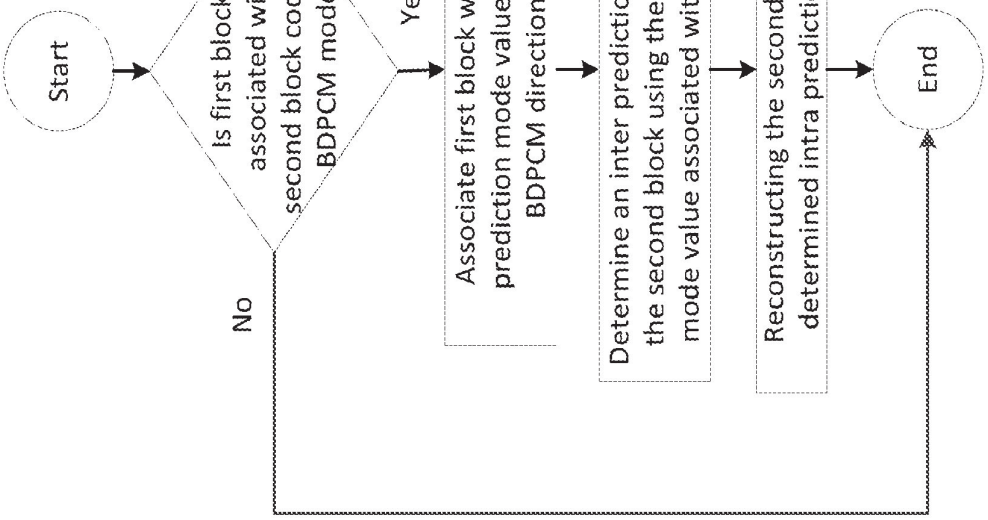
Start
Is first block associated with second block coded in BDPCM mode?
900
Yes
No
Associate first block with an intra prediction mode value based on a BDPCM directional flag
902
Determine an inter prediction mode value for the second block using the intra prediction mode value associated with the first block
904
Reconstructing the second block using the determined intra prediction mode value
906
End

FIG. 9

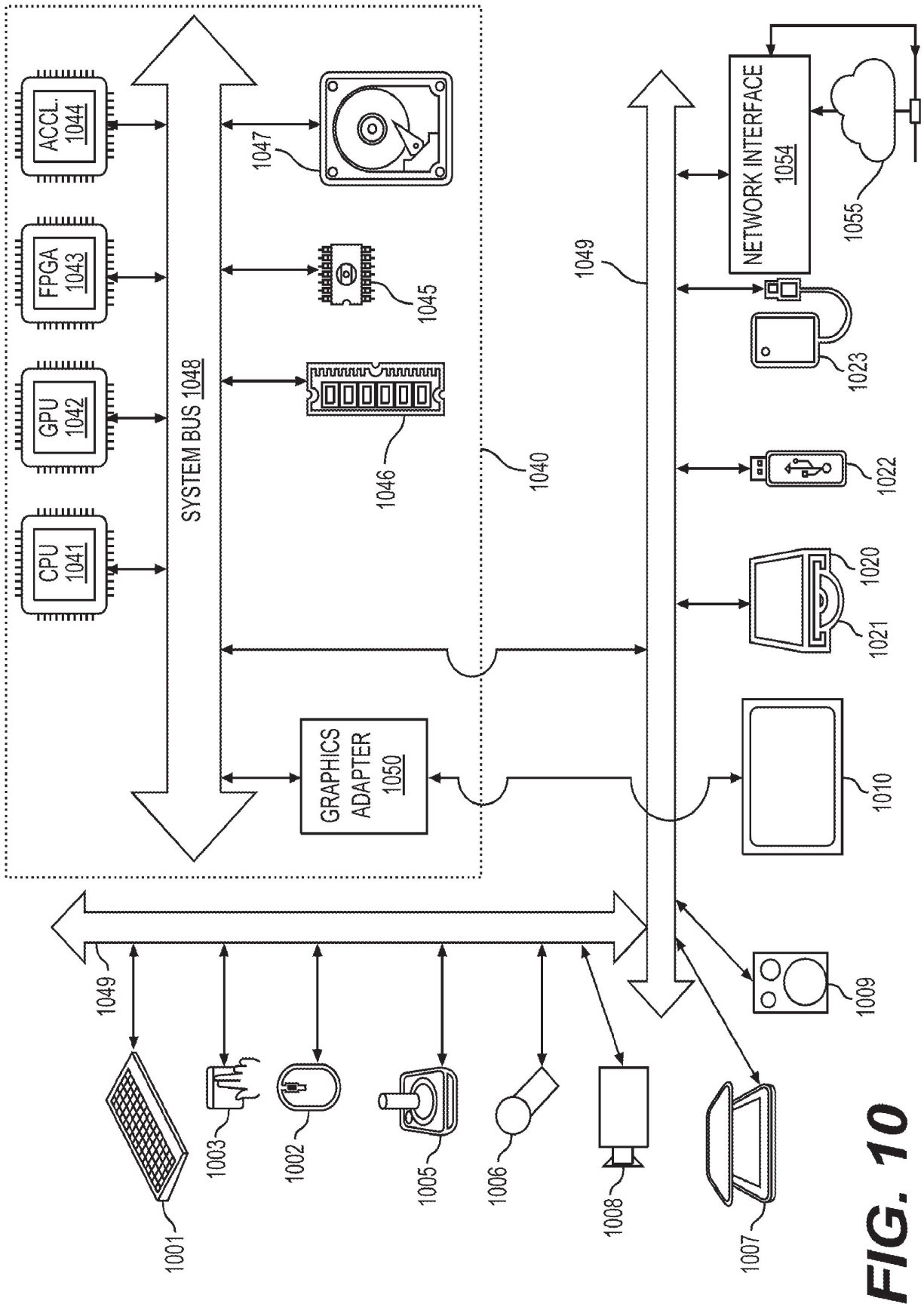
CPU 1041
GPU 1042
FPGA 1043
ACCL. 1044
SYSTEM BUS 1048
1047
1045
1046
1040
GRAPHICS ADAPTER 1050
1049
NETWORK INTERFACE 1054
1055
1023
1022
1020
1021
1010
1009
1001
1003
1002
1005
1006
1008
1007

FIG. 10