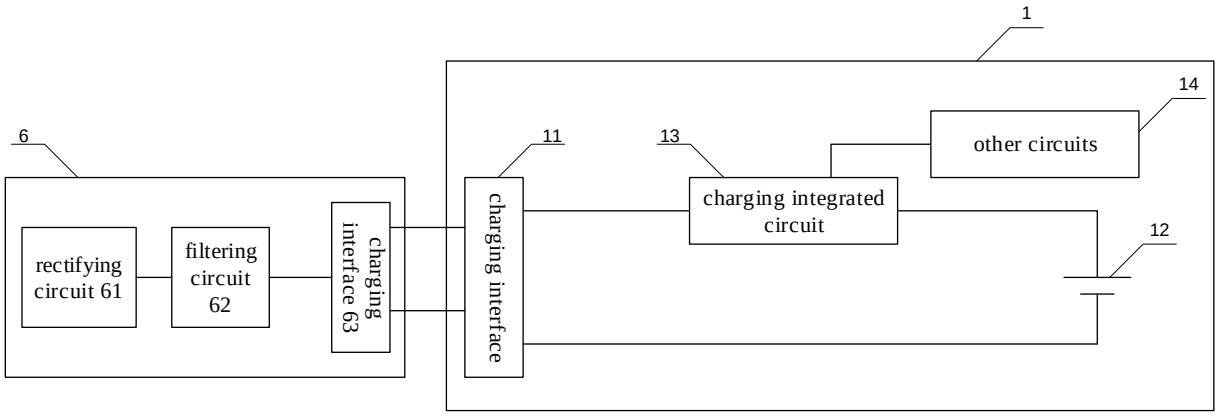

FIG. 1

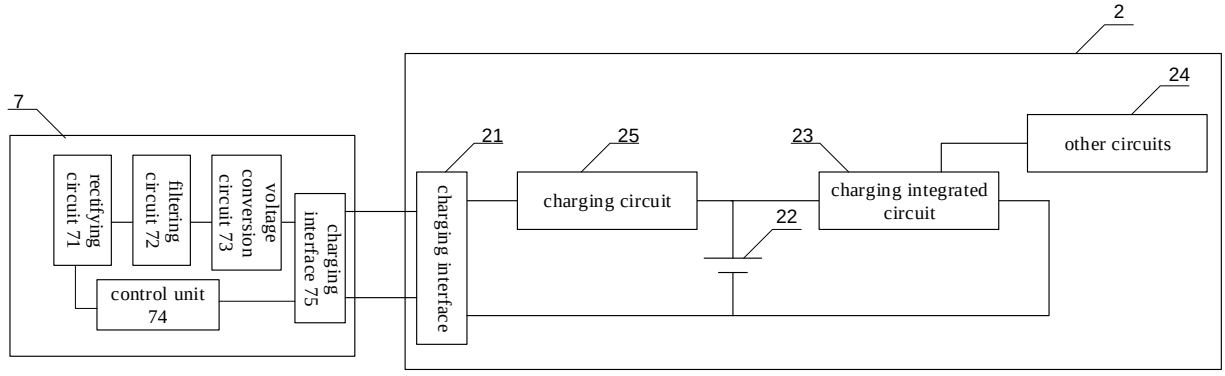

FIG. 2

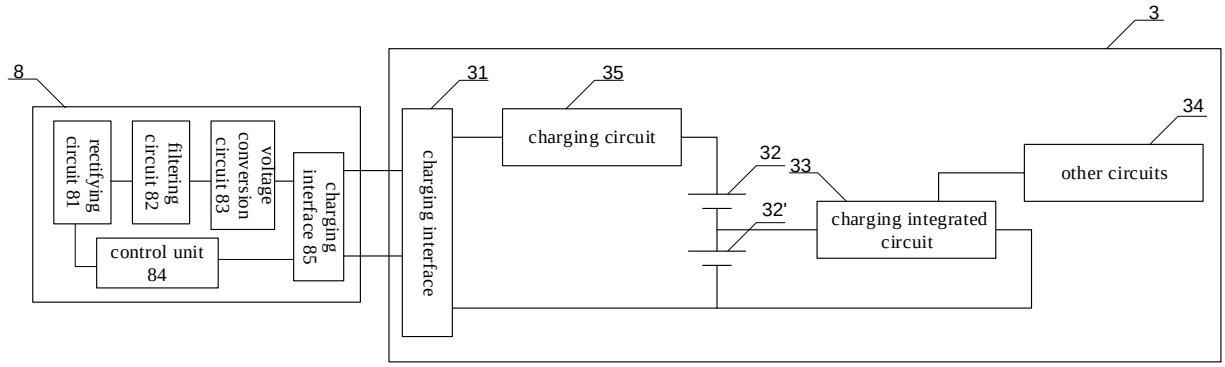

FIG. 3

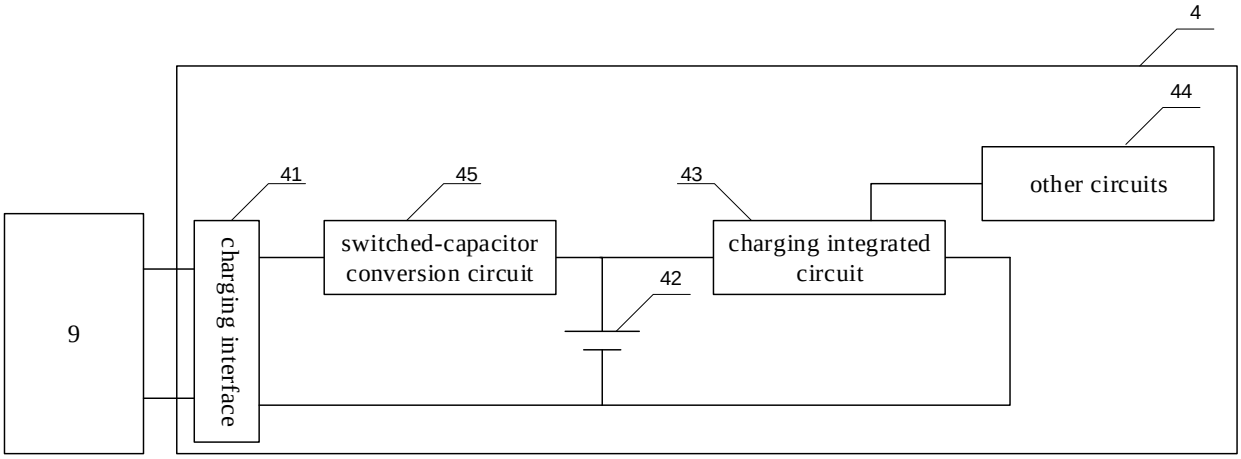
4
44
41
45
43
other circuits
9
charging interface
switched-capacitor conversion circuit
charging integrated circuit
42

FIG. 4

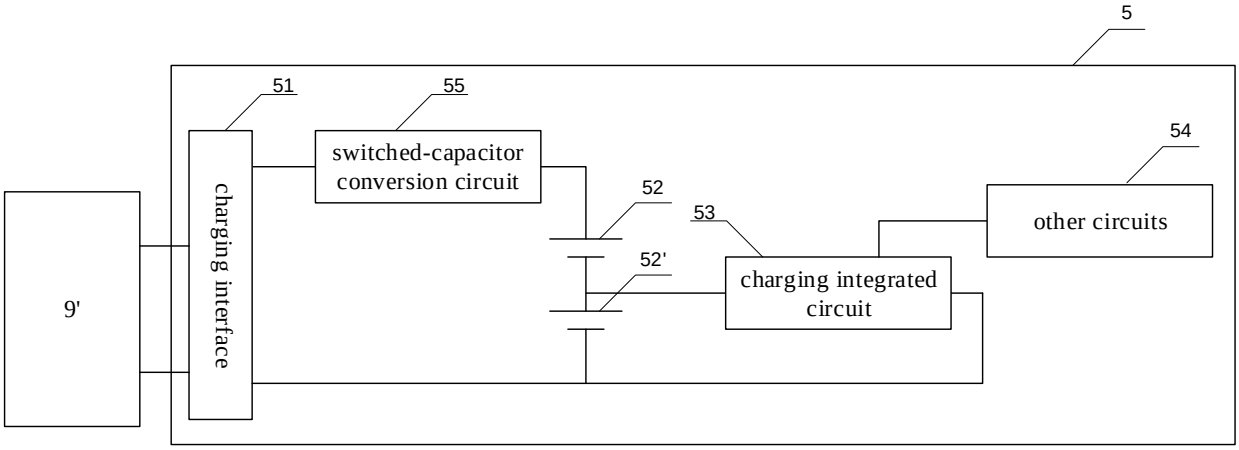
5
51
55
54
switched-capacitor conversion circuit
52
53
other circuits
9'
52'
charging integrated circuit
charging interface

FIG. 5

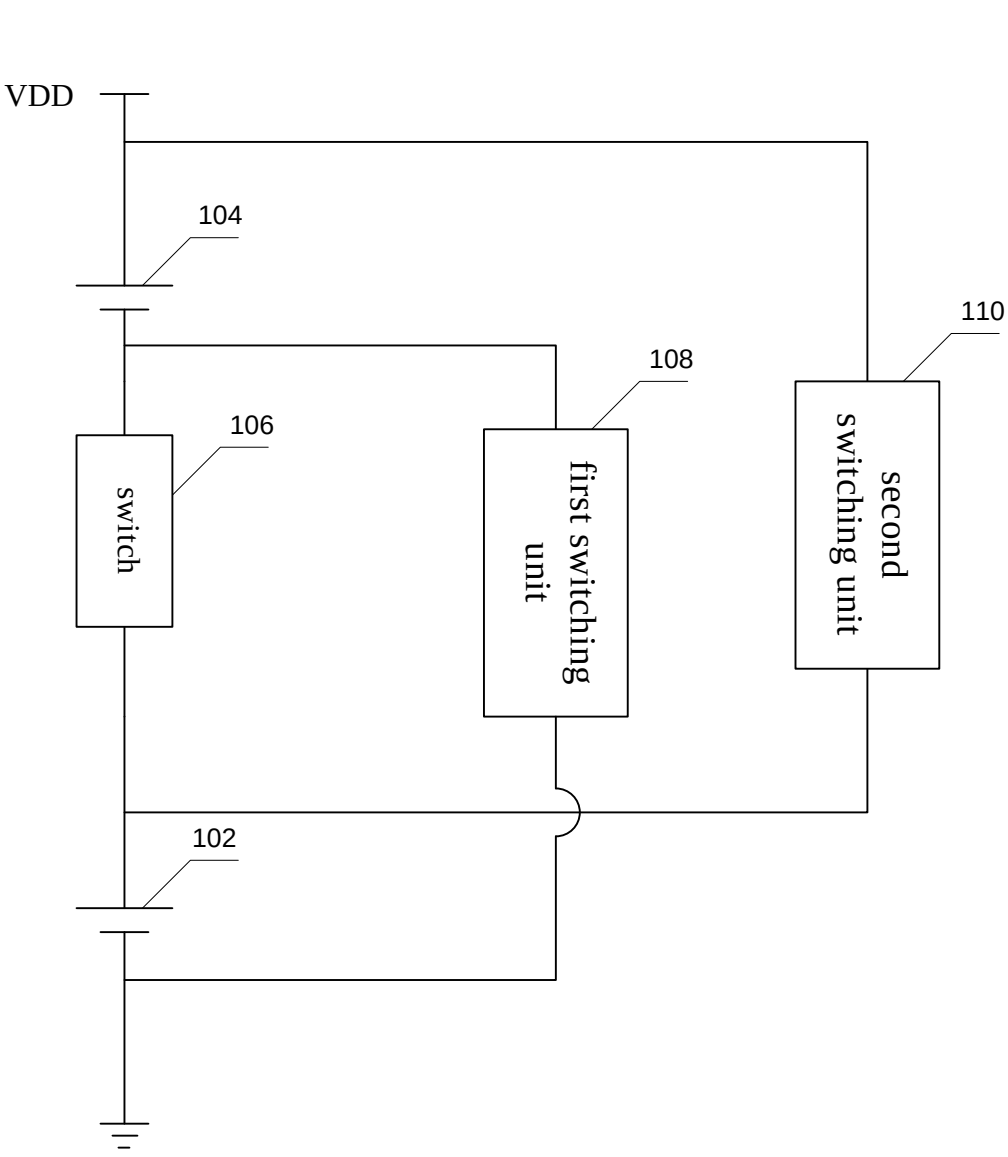
10
VDD
104
110
108
106
switch
first switching unit
second switching unit
102

FIG. 6

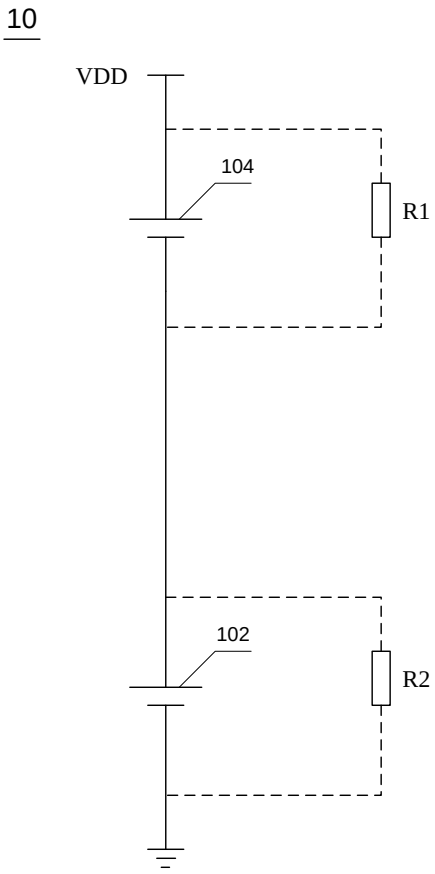

FIG. 7

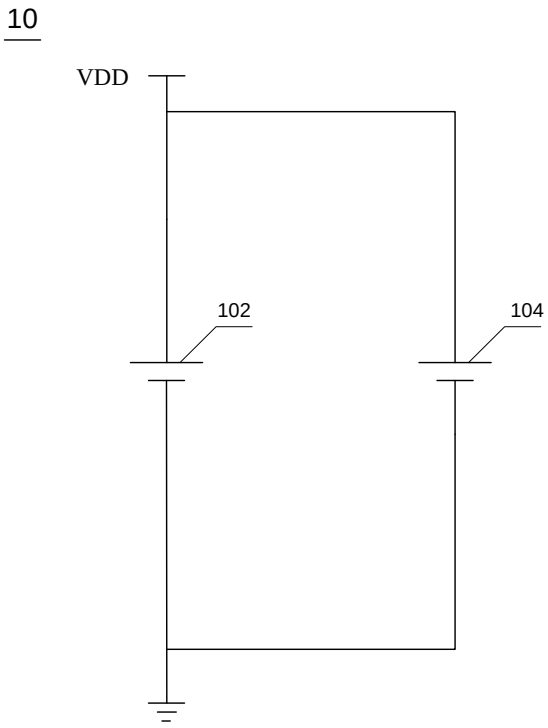

FIG. 8

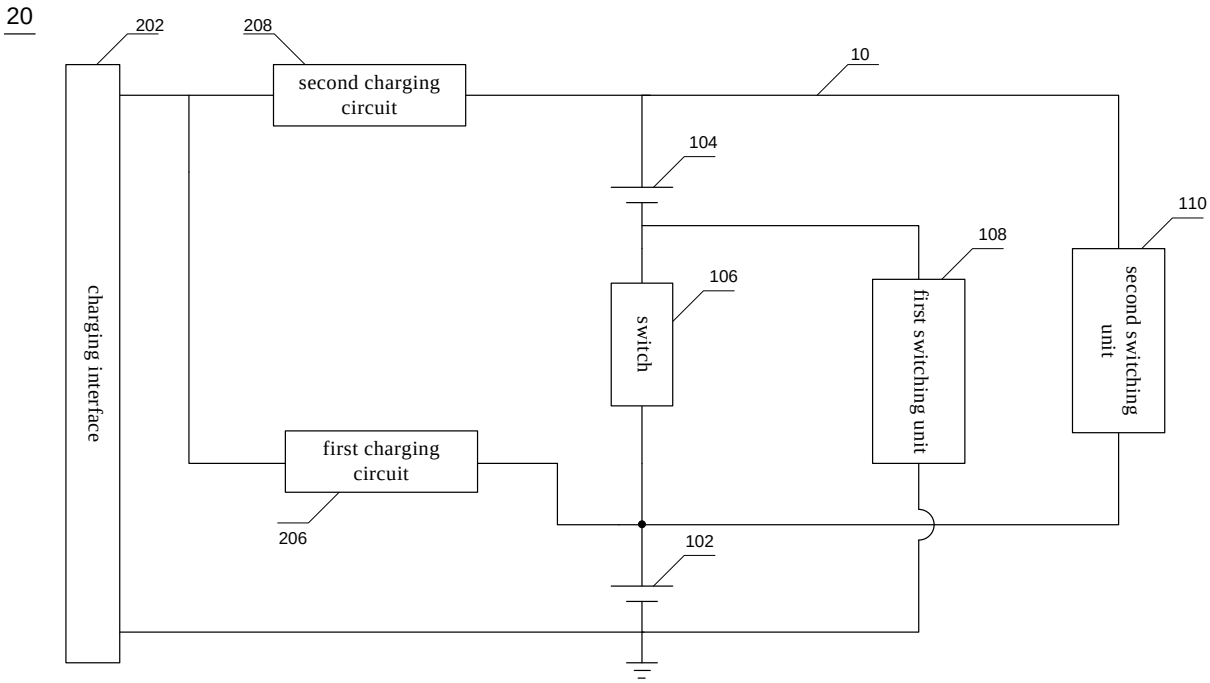

FIG. 9

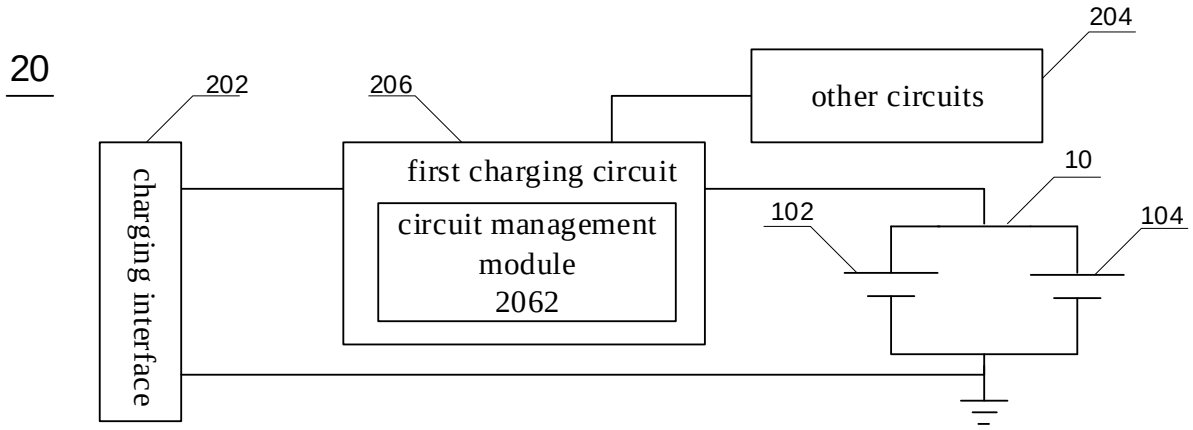

FIG. 10

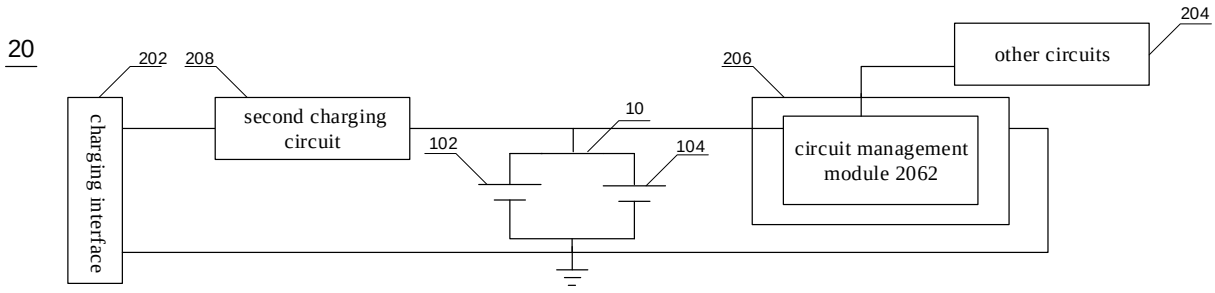

FIG. 11

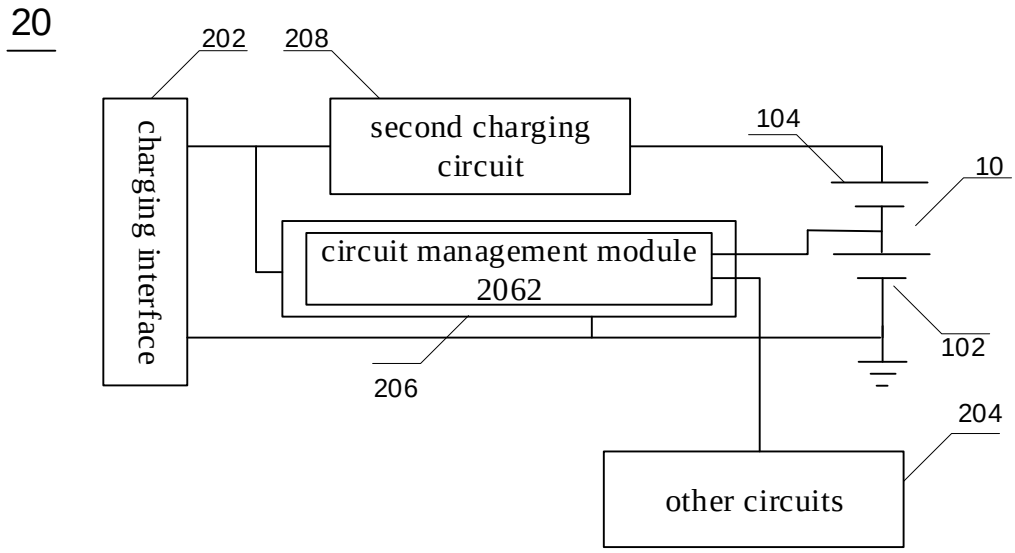
20
202
208
charging interface
second charging circuit
104
10
circuit management module 2062
102
206
204
other circuits

FIG. 12

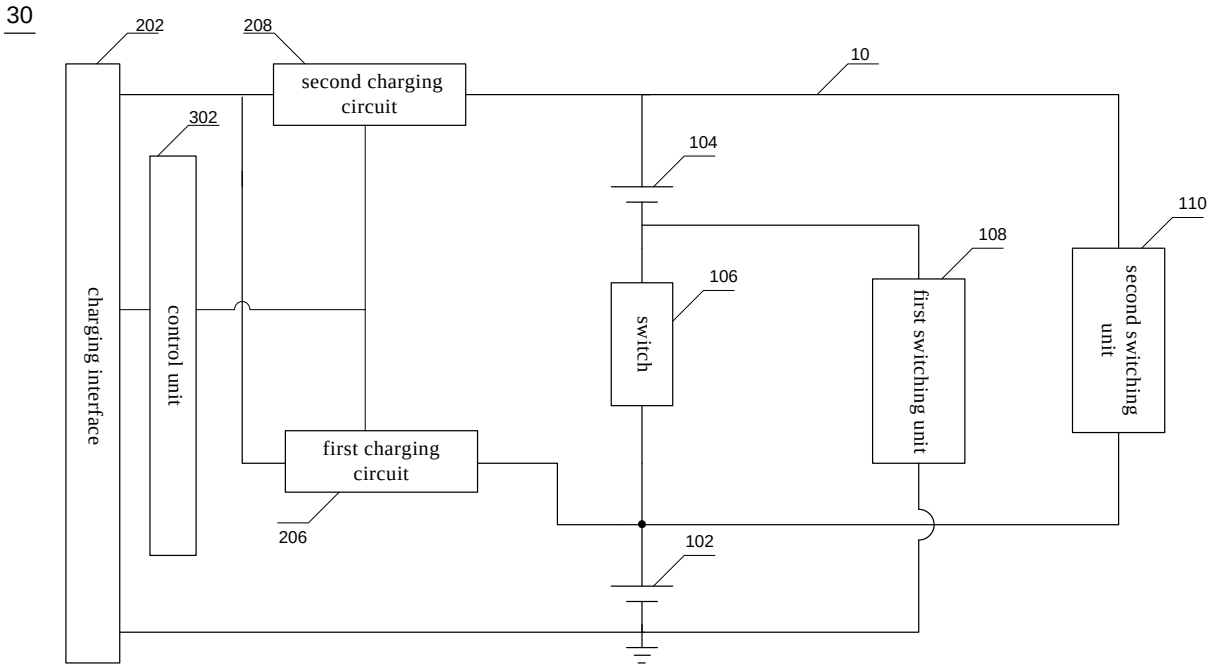
30
202
208
second charging circuit
10
302
104
110
108
106
charging interface
control unit
switch
first switching unit
second switching unit
first charging circuit
206
102

FIG. 13

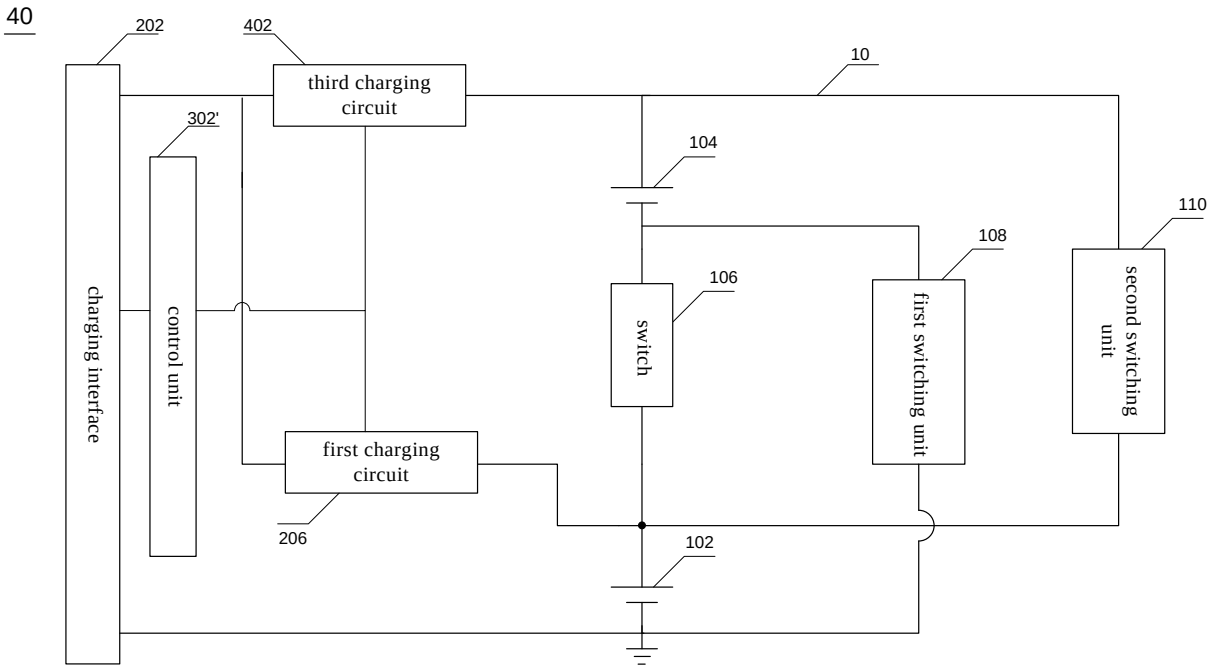

FIG. 14

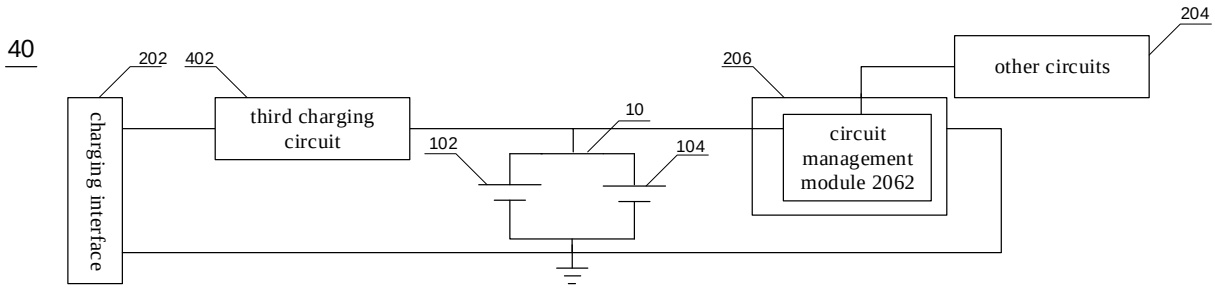

FIG. 15

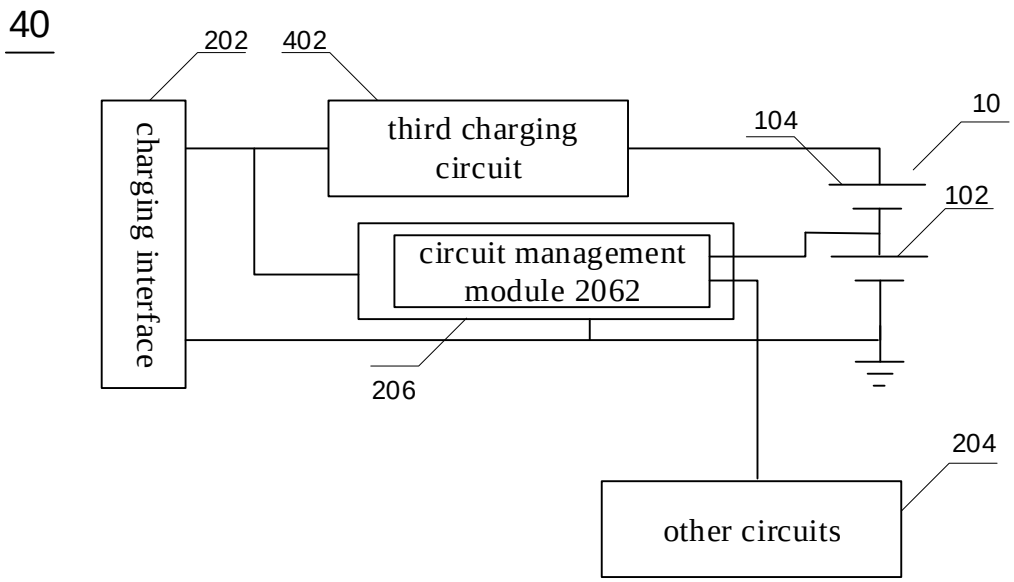

FIG. 16

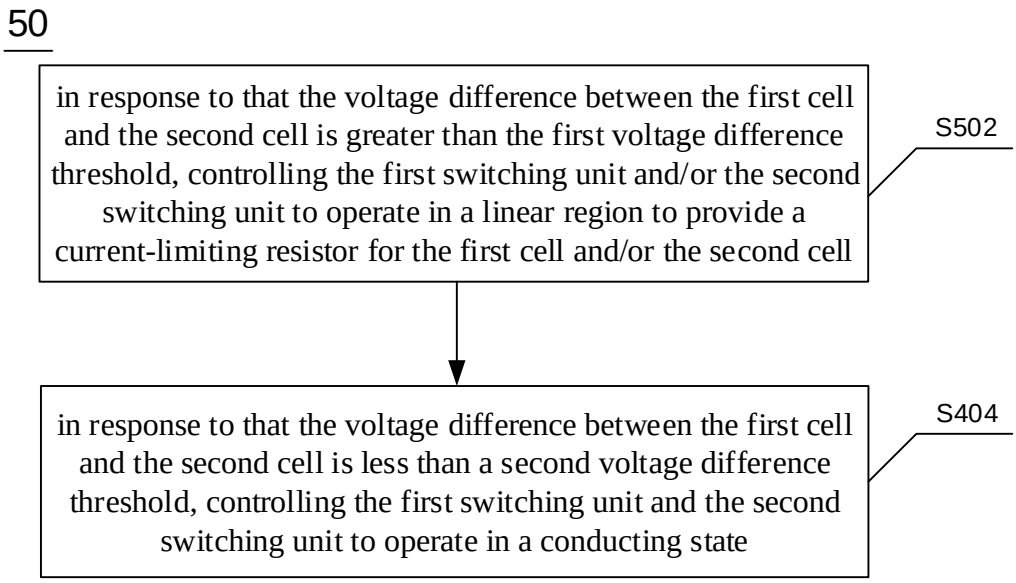
50
in response to that the voltage difference between the first cell and the second cell is greater than the first voltage difference threshold, controlling the first switching unit and/or the second switching unit to operate in a linear region to provide a current-limiting resistor for the first cell and/or the second cell
S502
in response to that the voltage difference between the first cell and the second cell is less than a second voltage difference threshold, controlling the first switching unit and the second switching unit to operate in a conducting state
S404

FIG. 17