(12) INTERNATIONAL APPLICATION PUBLISHED UNDER THE PATENT COOPERATION TREATY (PCT)

(19) World Intellectual Property Organization
International Bureau

(43) International Publication Date
12 August 2004 (12.08.2004)

PCT

(10) International Publication Number
WO 2004/068196 A1

(51) International Patent Classification[7]: G02B 1/04, G02C 7/04

(21) International Application Number: PCT/US2004/001266

(22) International Filing Date: 20 January 2004 (20.01.2004)

(25) Filing Language: English

(26) Publication Language: English

(30) Priority Data:
10/348,448 21 January 2003 (21.01.2003) US

(71) Applicant *(for all designated States except US)*: **JOHNSON & JOHNSON VISION CARE, INC.** [US/US]; Suite 100, 7500 Centurion Parkway, Jacksonville, FL 32256 (US).

(72) Inventors; and

(75) Inventors/Applicants *(for US only)*: **ROFFMAN, Jeffrey, H.** [US/US]; 307 Edgewater Branch Drive, Jacksonville, FL 32259 (US). **KUMAR, Ganesh, N.** [US/US]; 117 Kingfisher Drive, Ponte Vedra Beach, fl 32082 (US). **DURLAND, Scott, C.** [US/US]; 2134 Shepard Street, Jacksonville, FL 32211 (US). **KINDT-LARSEN, Ture** [DK/DK]; Soelleroedvej 40, DK-2840 Holte (DK). **POLING, Timothy, R.** [US/US]; 304 Morris Loop, Jacksonville, FL 32259 (US). **RASTRELLI, Edmund, C.** [US/US]; 1999 Selva Marina Drive, Atlantic Beach, FL 32233 (US).

(74) Agent: **GIANNESCHI, Lois, A.**; Johnson & Johnson, 1 Johnson & Johnson Plaza, New Brunswick, NJ 08933 (US).

(81) Designated States *(unless otherwise indicated, for every kind of national protection available)*: AE, AG, AL, AM, AT, AU, AZ, BA, BB, BG, BR, BW, BY, BZ, CA, CH, CN, CO, CR, CU, CZ, DE, DK, DM, DZ, EC, EE, EG, ES, FI, GB, GD, GE, GH, GM, HR, HU, ID, IL, IN, IS, JP, KE, KG, KP, KR, KZ, LC, LK, LR, LS, LT, LU, LV, MA, MD, MG, MK, MN, MW, MX, MZ, NA, NI, NO, NZ, OM, PG, PH, PL, PT, RO, RU, SC, SD, SE, SG, SK, SL, SY, TJ, TM, TN, TR, TT, TZ, UA, UG, US, UZ, VC, VN, YU, ZA, ZM, ZW.

(84) Designated States *(unless otherwise indicated, for every kind of regional protection available)*: ARIPO (BW, GH, GM, KE, LS, MW, MZ, SD, SL, SZ, TZ, UG, ZM, ZW), Eurasian (AM, AZ, BY, KG, KZ, MD, RU, TJ, TM), European (AT, BE, BG, CH, CY, CZ, DE, DK, EE, ES, FI, FR, GB, GR, HU, IE, IT, LU, MC, NL, PT, RO, SE, SI, SK, TR), OAPI (BF, BJ, CF, CG, CI, CM, GA, GN, GQ, GW, ML, MR, NE, SN, TD, TG).

Published:
— *with international search report*
— *before the expiration of the time limit for amending the claims and to be republished in the event of receipt of amendments*

For two-letter codes and other abbreviations, refer to the "Guidance Notes on Codes and Abbreviations" appearing at the beginning of each regular issue of the PCT Gazette.

(54) Title: HYBRID MULTIFOCAL CONTACT LENSES

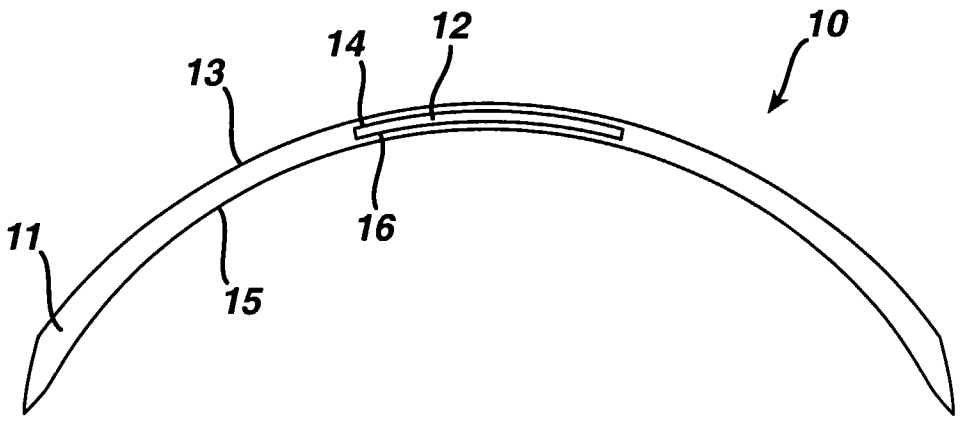

(57) Abstract: The invention provides a multifocal ophthalmic lens that is a hybrid lens in that it combines both soft lens material and rigid lens material. The lens is more comfortable to wear than a rigid lens and yet it provides correction for astigmatism without the need for the addition of cylinder power.

WO 2004/068196 A1