FIG. 19

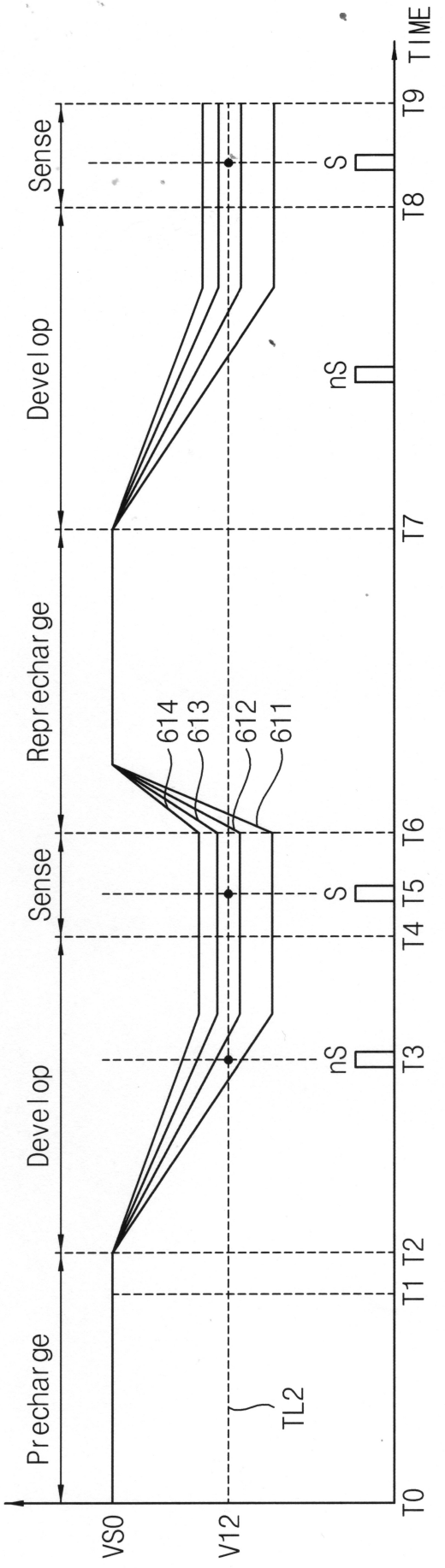
TIME
T0
T1
T2
T3
T4
T5
T6
T7
T8
T9
Precharge
Develop
Sense
Recharge
Develop
Sense
nS
S
nS
S
611
612
613
614
TL2
V12
VS0