FIG. 1

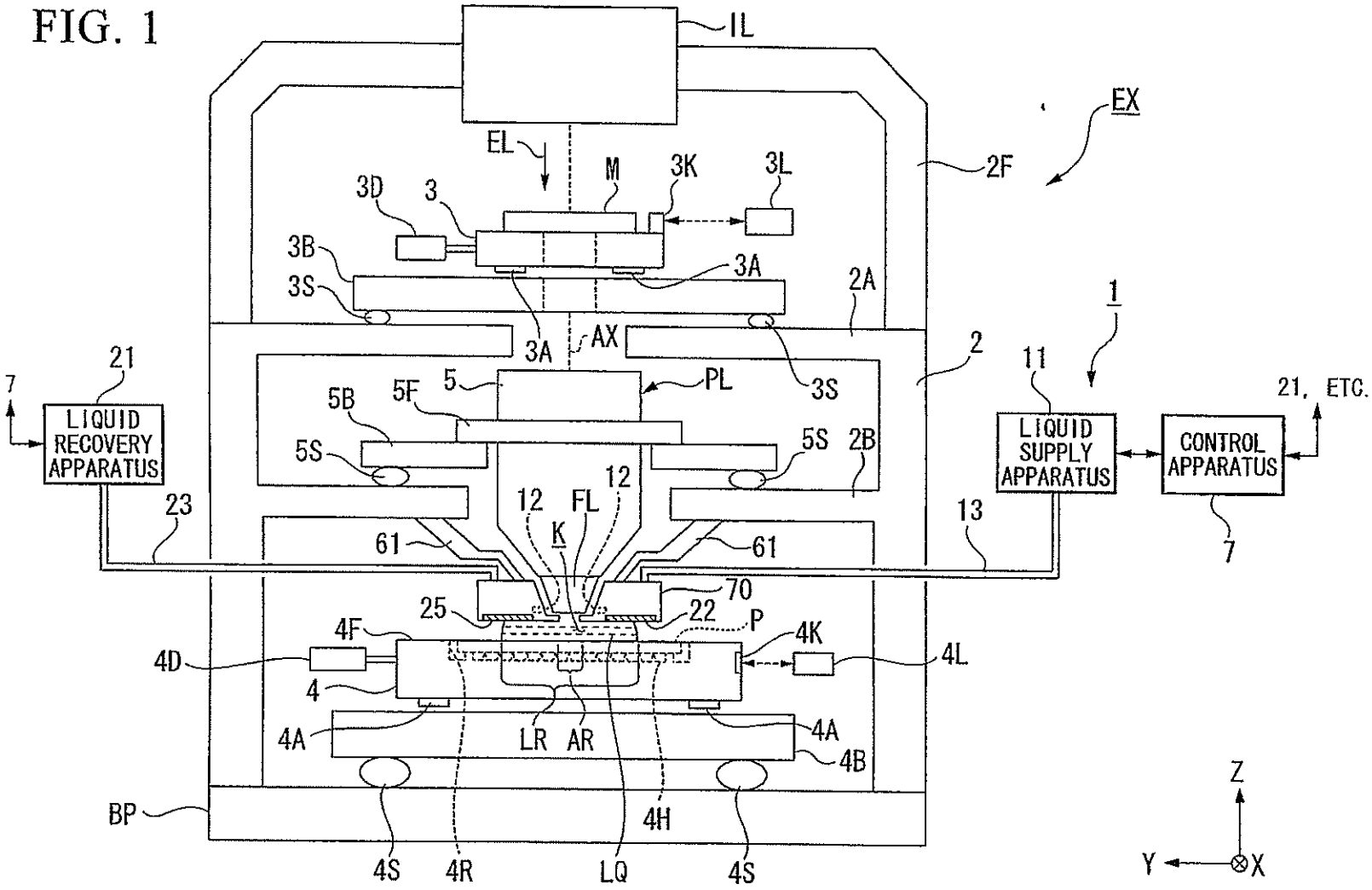
IL
EX
EL
M
3K
3L
2F
3D
3
3B
3A
3S
2A
1
3A
AX
2
11
21
7
5
PL
3S
21, ETC.
LIQUID RECOVERY APPARATUS
5B
5F
LIQUID SUPPLY APPARATUS
CONTROL APPARATUS
5S
5S
2B
12
12
FL
K
23
13
61
61
7
70
25
22
P
4F
4K
4D
4L
4
4A
LR
AR
4A
4B
BP
4H
4S
4R
LQ
4S
Z
Y
X

FIG. 2

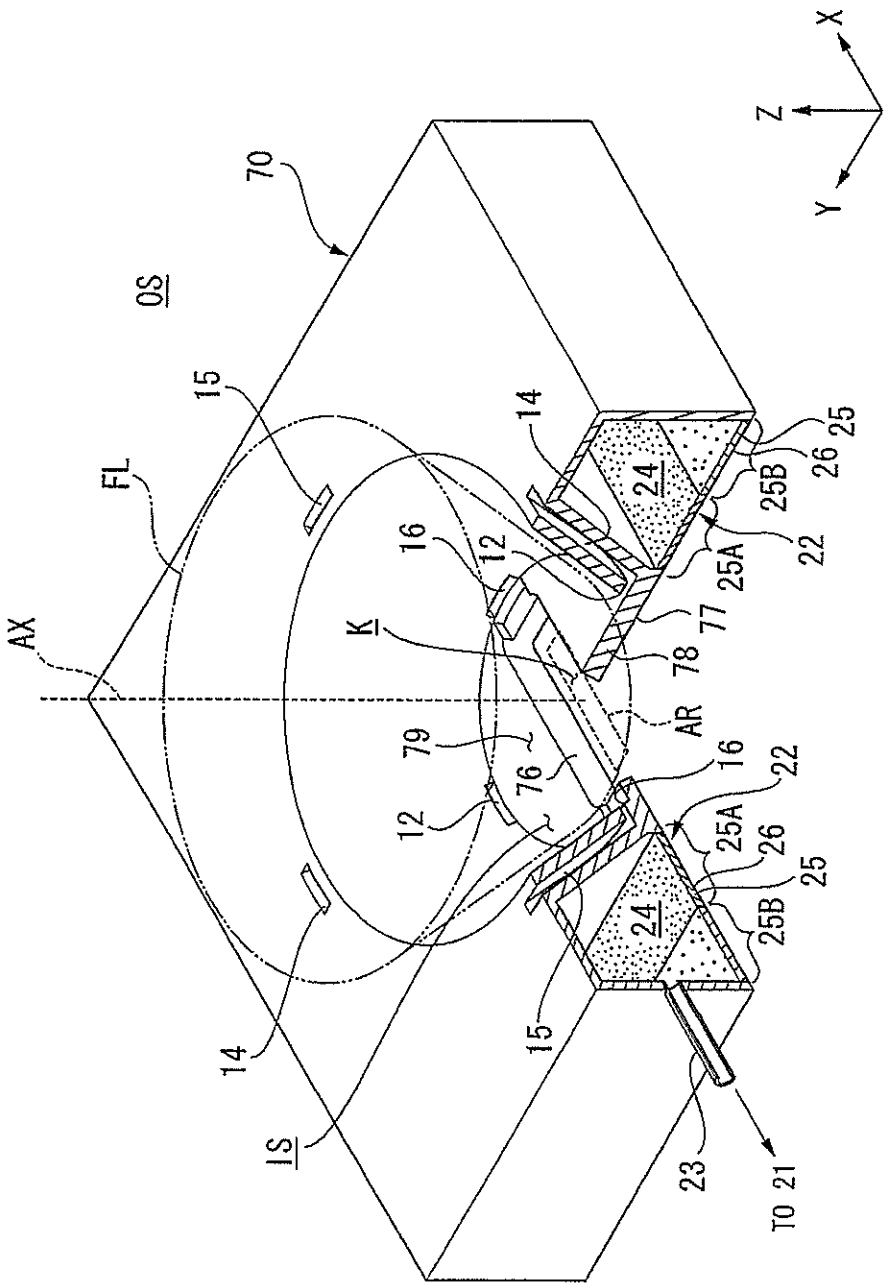
70
OS
15
FL
AX
14
16
12
K
79
76
12
14
IS
15
24
25
26
25B
22
25A
77
78
AR
16
22
25A
26
25
25B
24
23
TO 21
Z
X
Y

FIG. 3

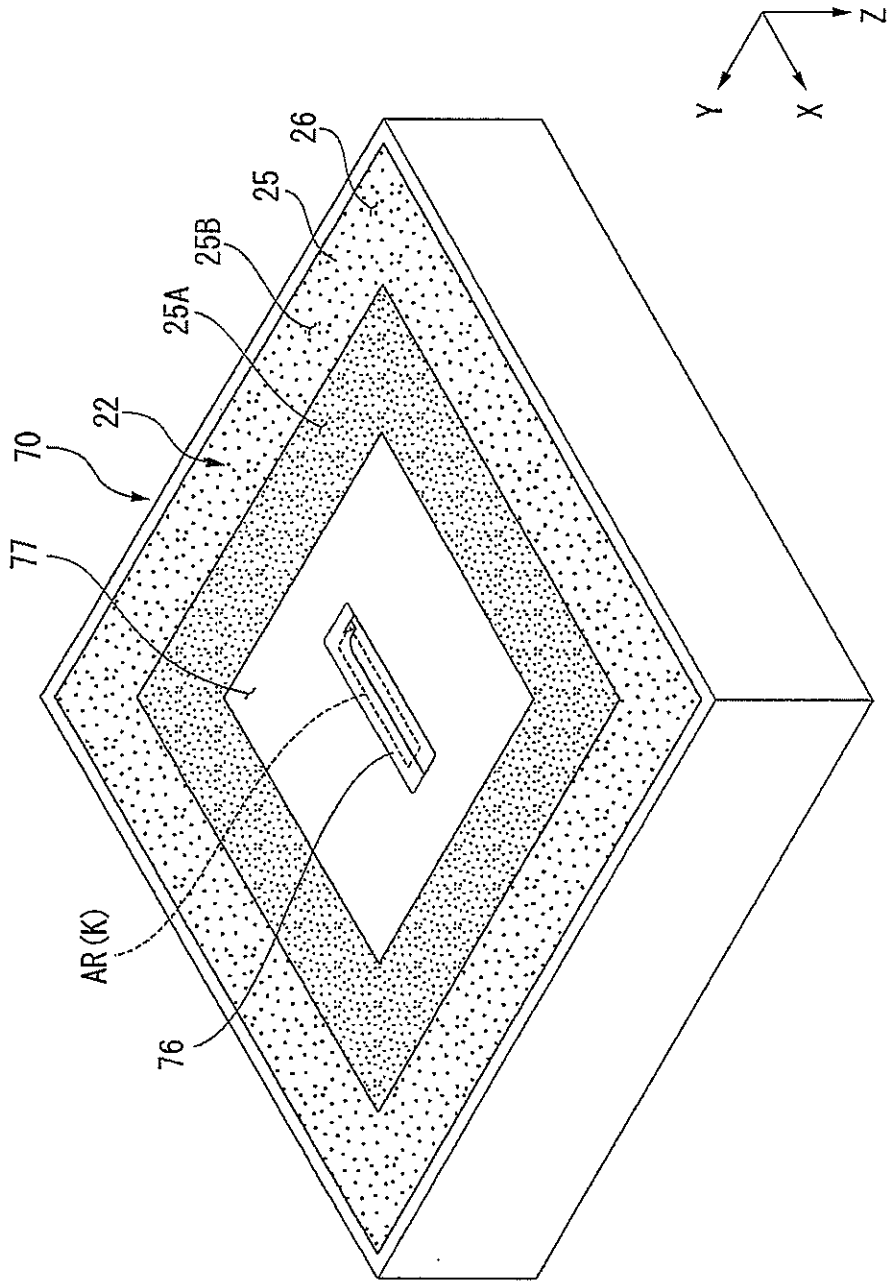

FIG. 4

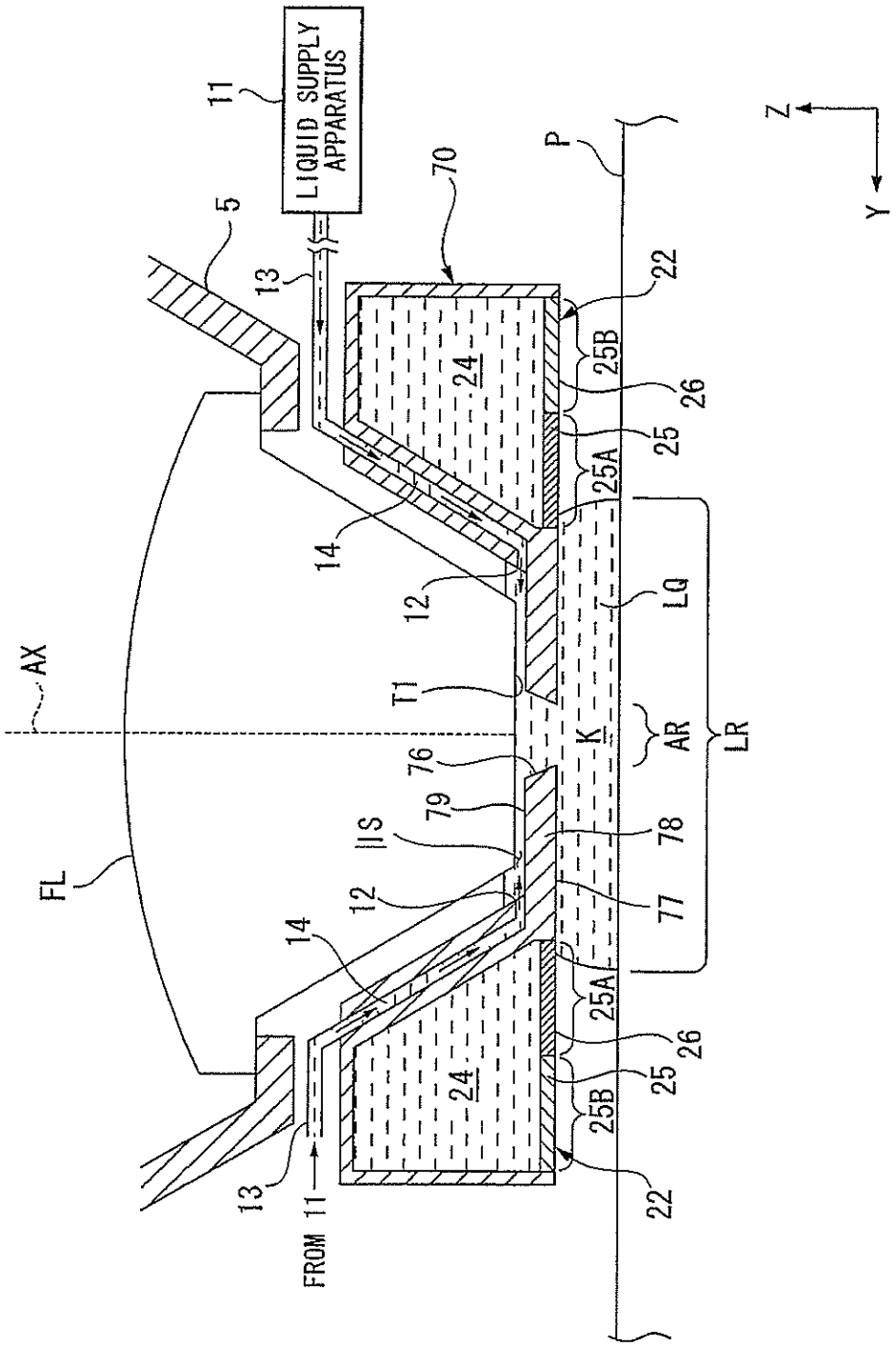
LIQUID SUPPLY APPARATUS
11
5
13
70
P
22
25B
24
26
25
25A
14
12
LQ
AX
T1
K
AR
LR
76
79
IIS
78
FL
77
FROM 11
Z
Y

FIG. 5

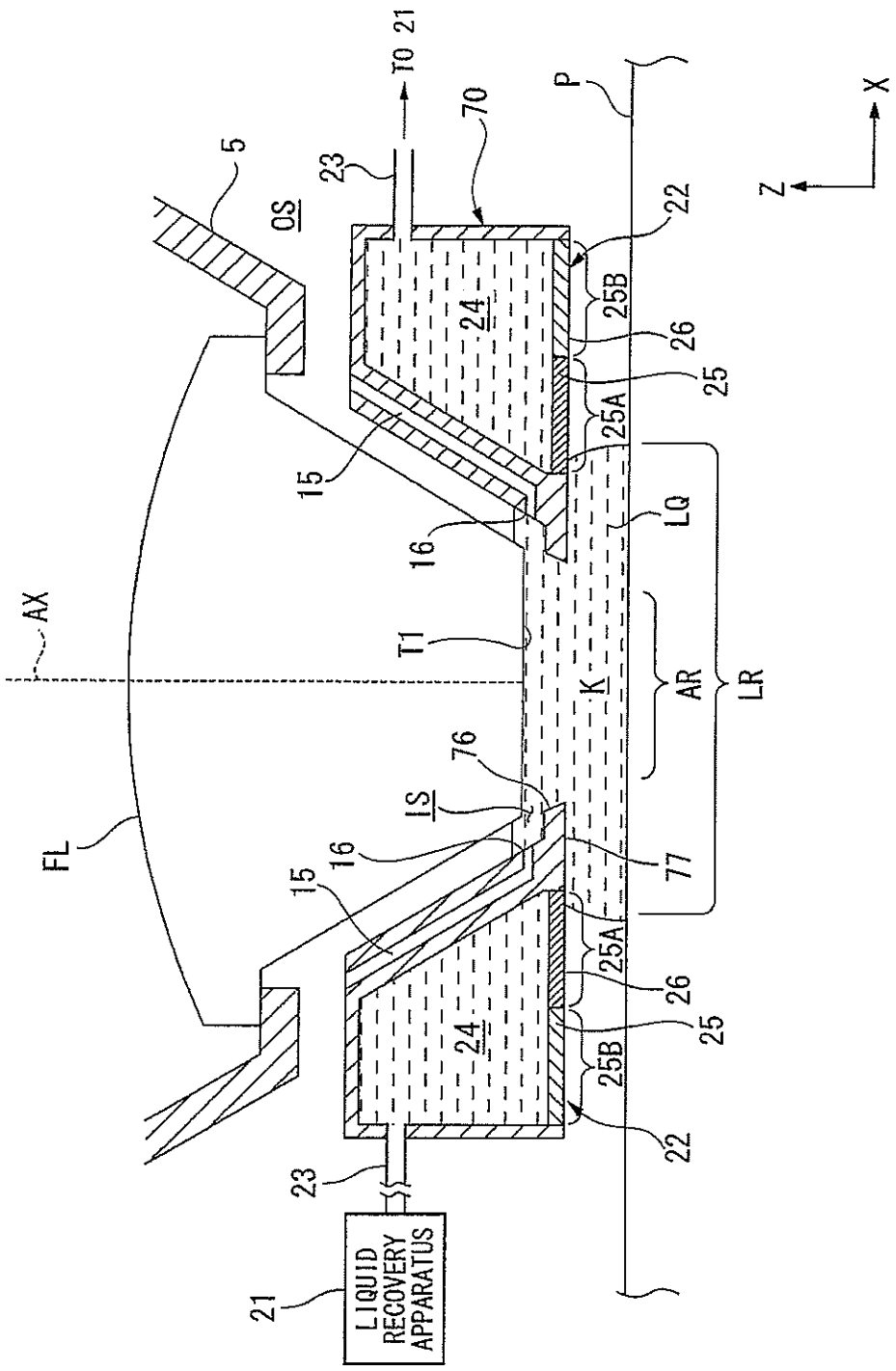
TO 21
70
P
5
OS
23
22
25B
24
26
25
25A
15
16
LQ
AX
T1
K
AR
LR
76
IS
FL
77
LIQUID RECOVERY APPARATUS
21
Z
X

FIG. 6

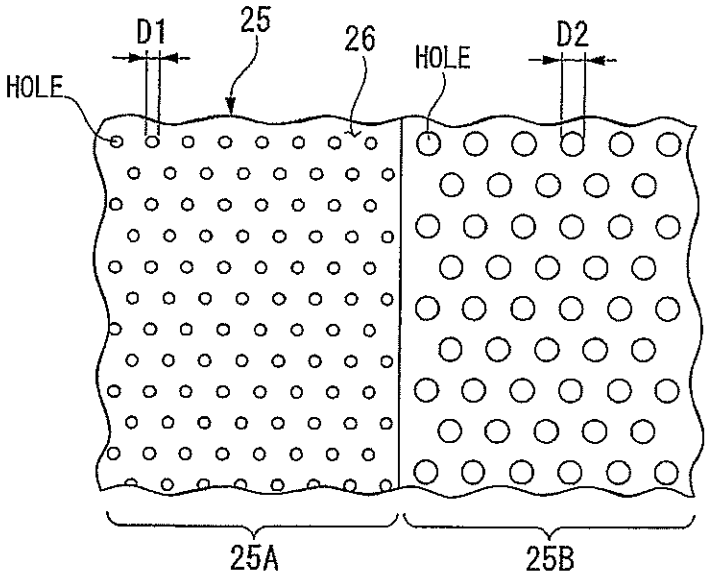

FIG. 7A

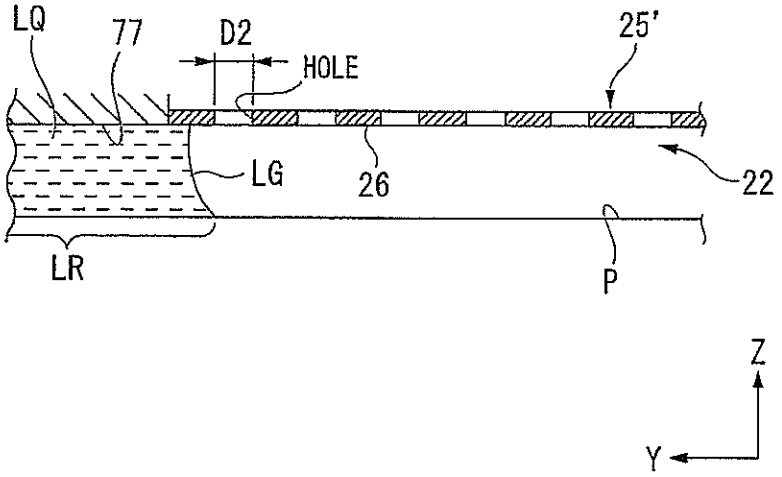
LQ
77
D2
HOLE
25'
LG
26
22
LR
P
Z
Y

FIG. 7B

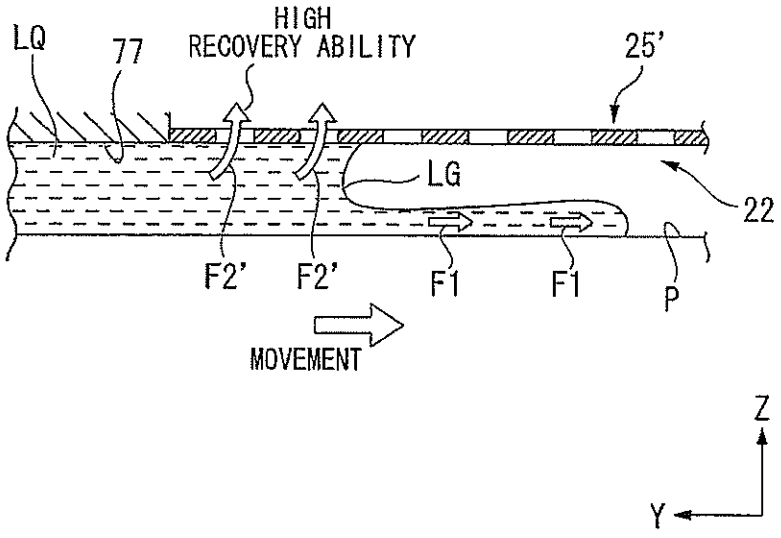
LQ
77
HIGH
RECOVERY ABILITY
25'
LG
22
F2'
F2'
F1
F1
P
MOVEMENT
Z
Y

FIG. 8A

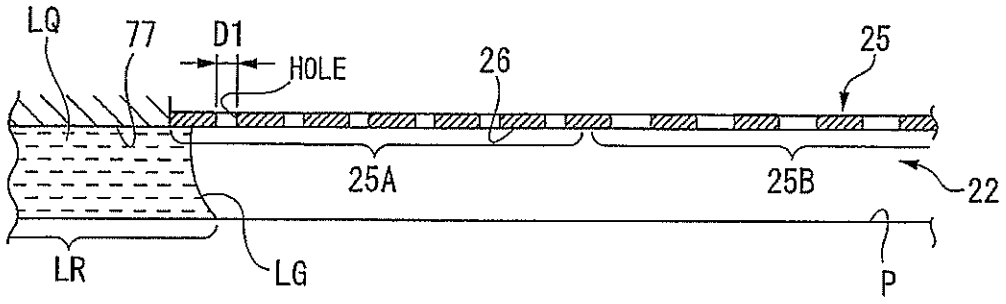
LQ
77
D1
HOLE
26
25
25A
25B
22
LR
LG
P

FIG. 8B

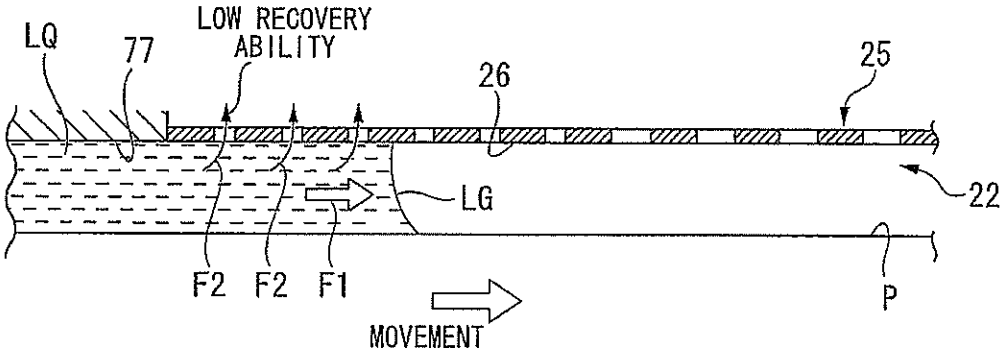
LQ
77
LOW RECOVERY ABILITY
26
25
22
LG
F2
F2
F1
P
MOVEMENT

FIG. 9

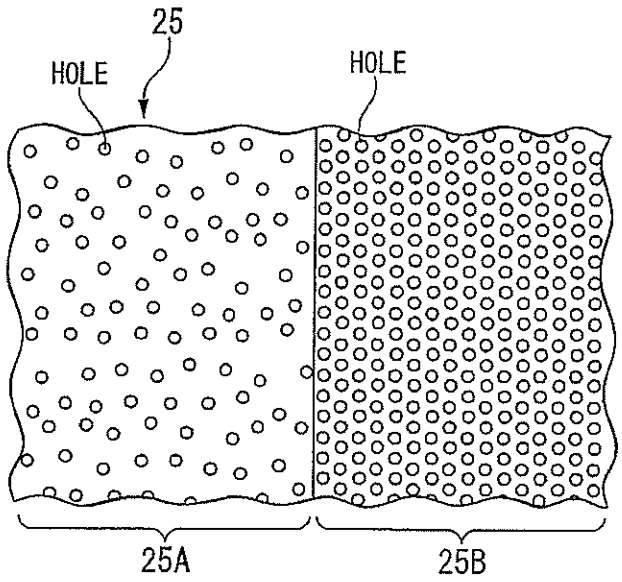

FIG. 10

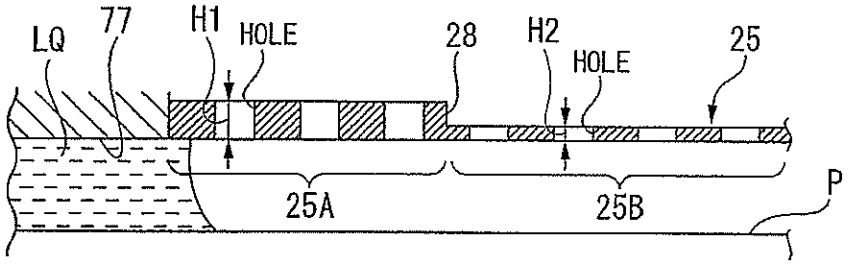

FIG. 11

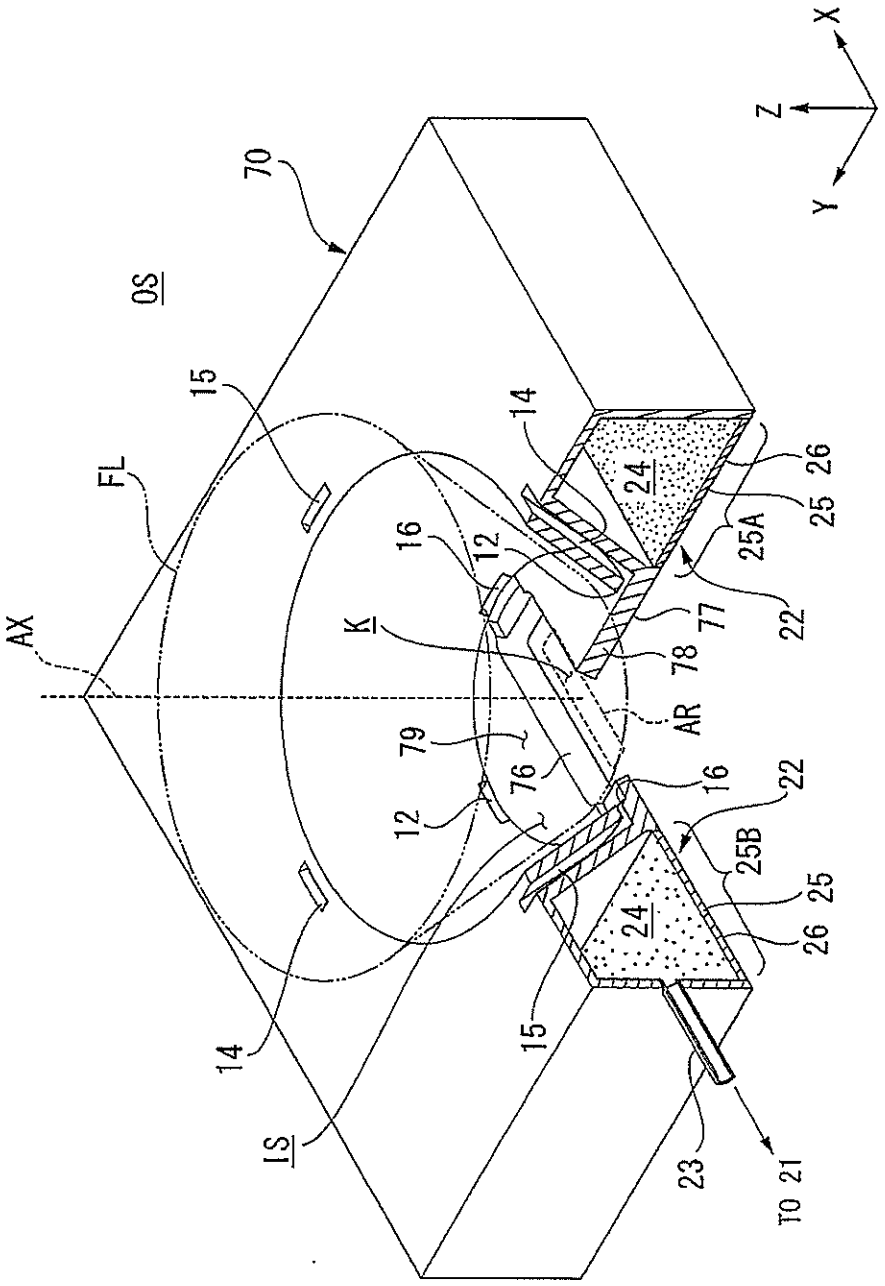

70
OS
15
FL
AX
14
16
12
K
79
76
12
16
22
25B
25
26
24
15
14
IS
23
TO 21
AR
78
77
22
25A
25
26
24
X
Z
Y

FIG. 12

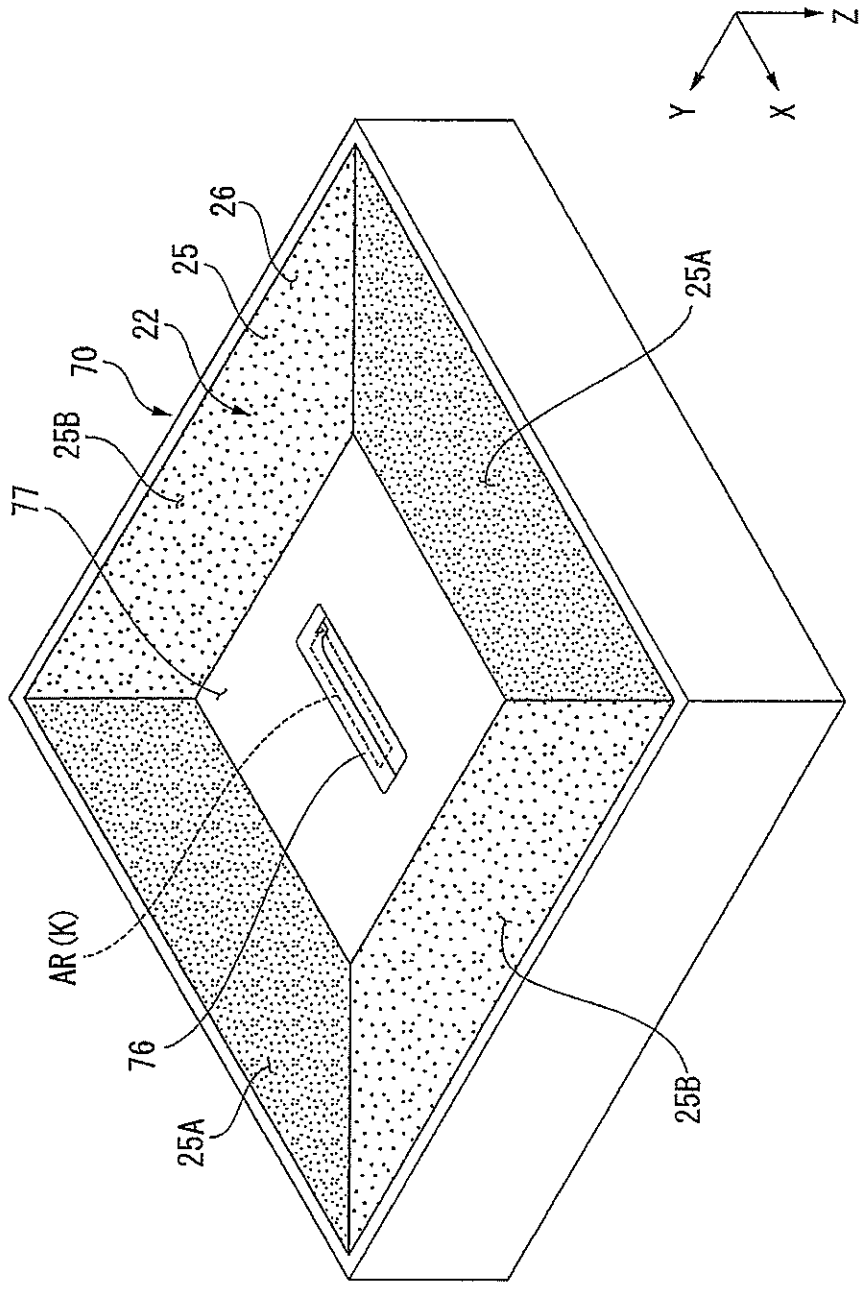

FIG. 13

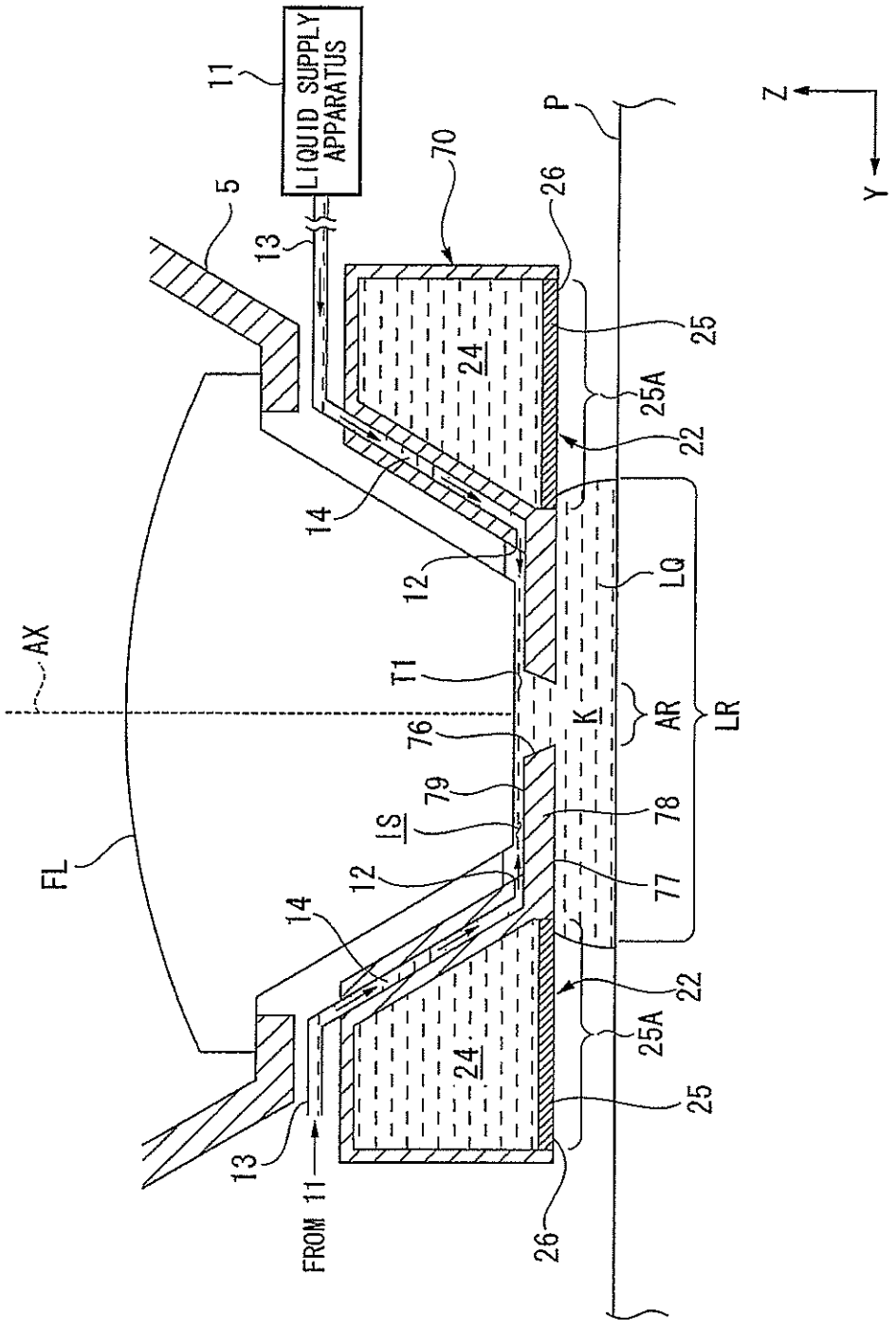
LIQUID SUPPLY APPARATUS
11
5
13
70
26
P
Z
Y
25
24
25A
22
14
12
LQ
AX
T1
K
AR
LR
76
79
78
IS
77
FL
FROM 11

FIG. 14

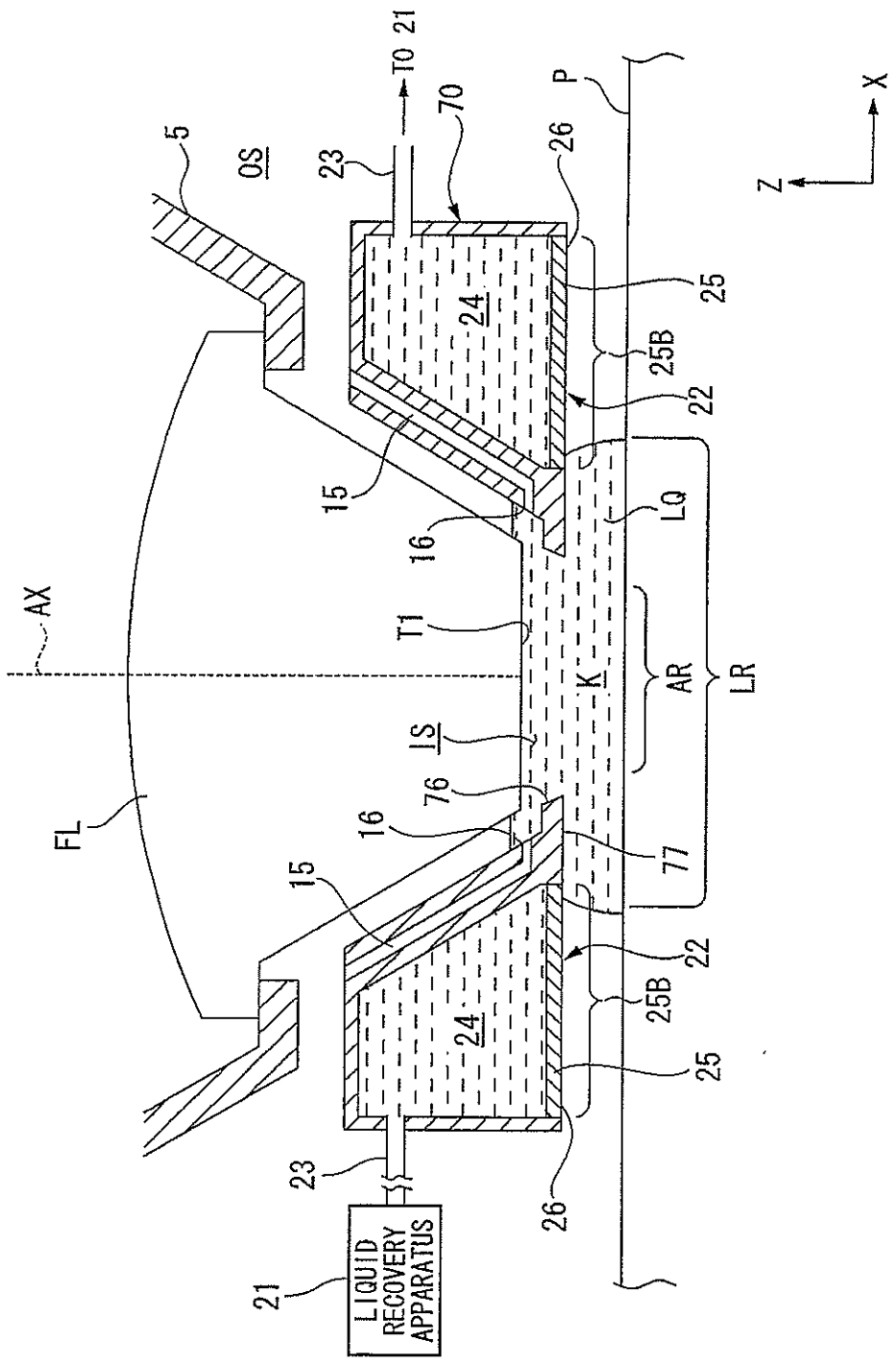
AX
FL
5
OS
23
TO 21
70
26
P
Z
X
25
24
25B
22
15
16
LQ
T1
K
AR
LR
LS
76
77
16
15
22
25B
24
25
23
26
21
LIQUID RECOVERY APPARATUS

FIG. 15

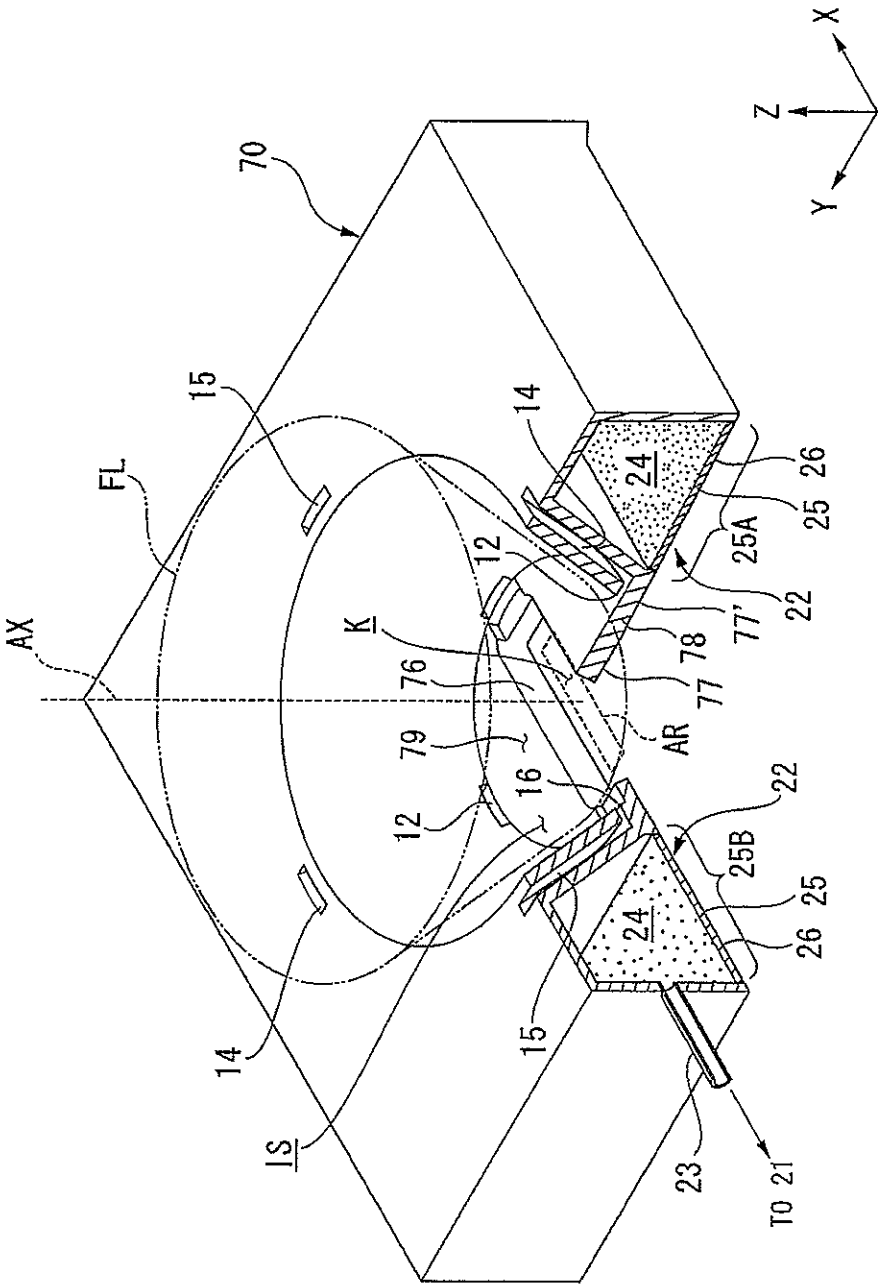
70
15
FL
AX
14
12
K
76
79
16
12
14
IS
15
24
24
26
25
25A
22
77'
78
77
AR
22
25B
25
26
23
TO 21
X
Y
Z

FIG. 16

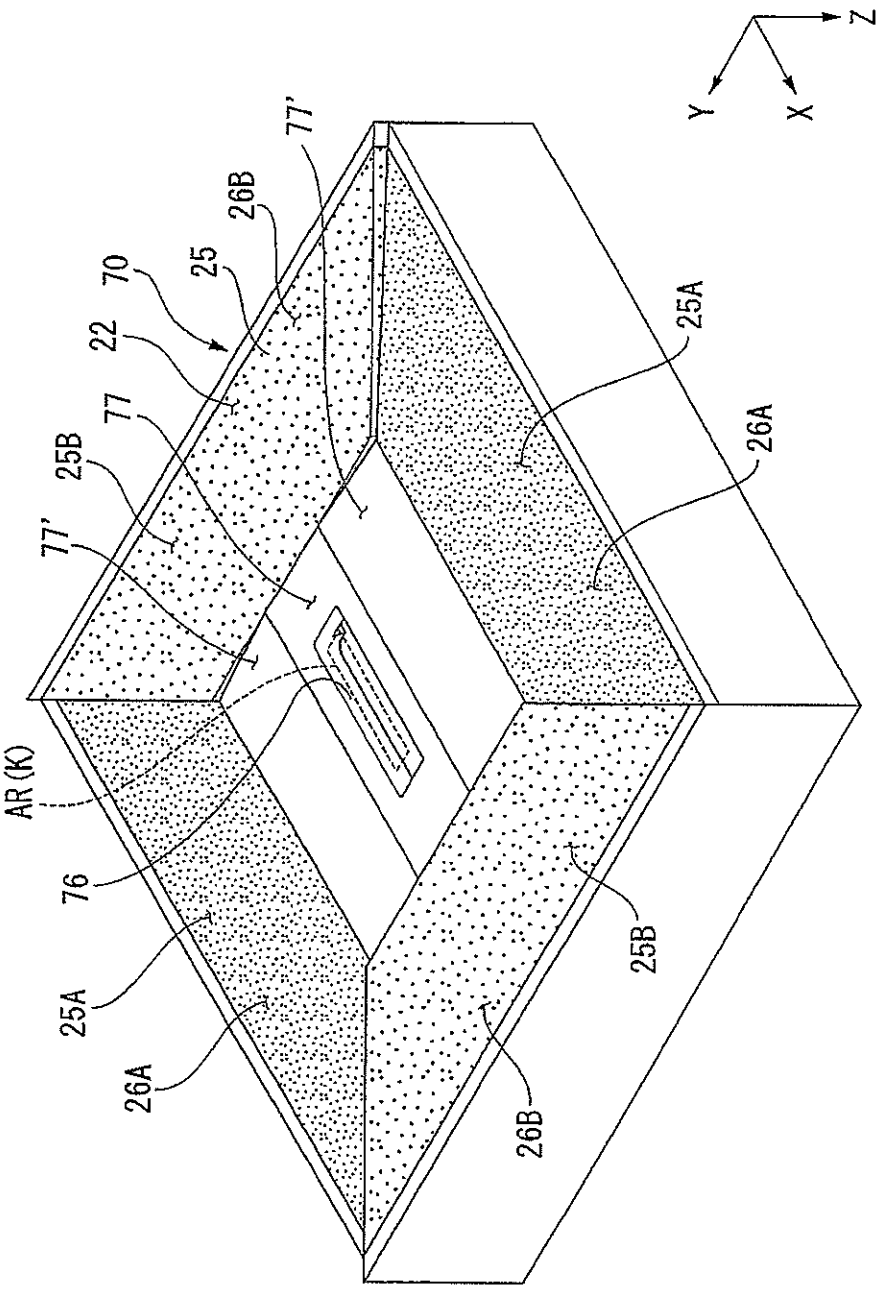

FIG. 17

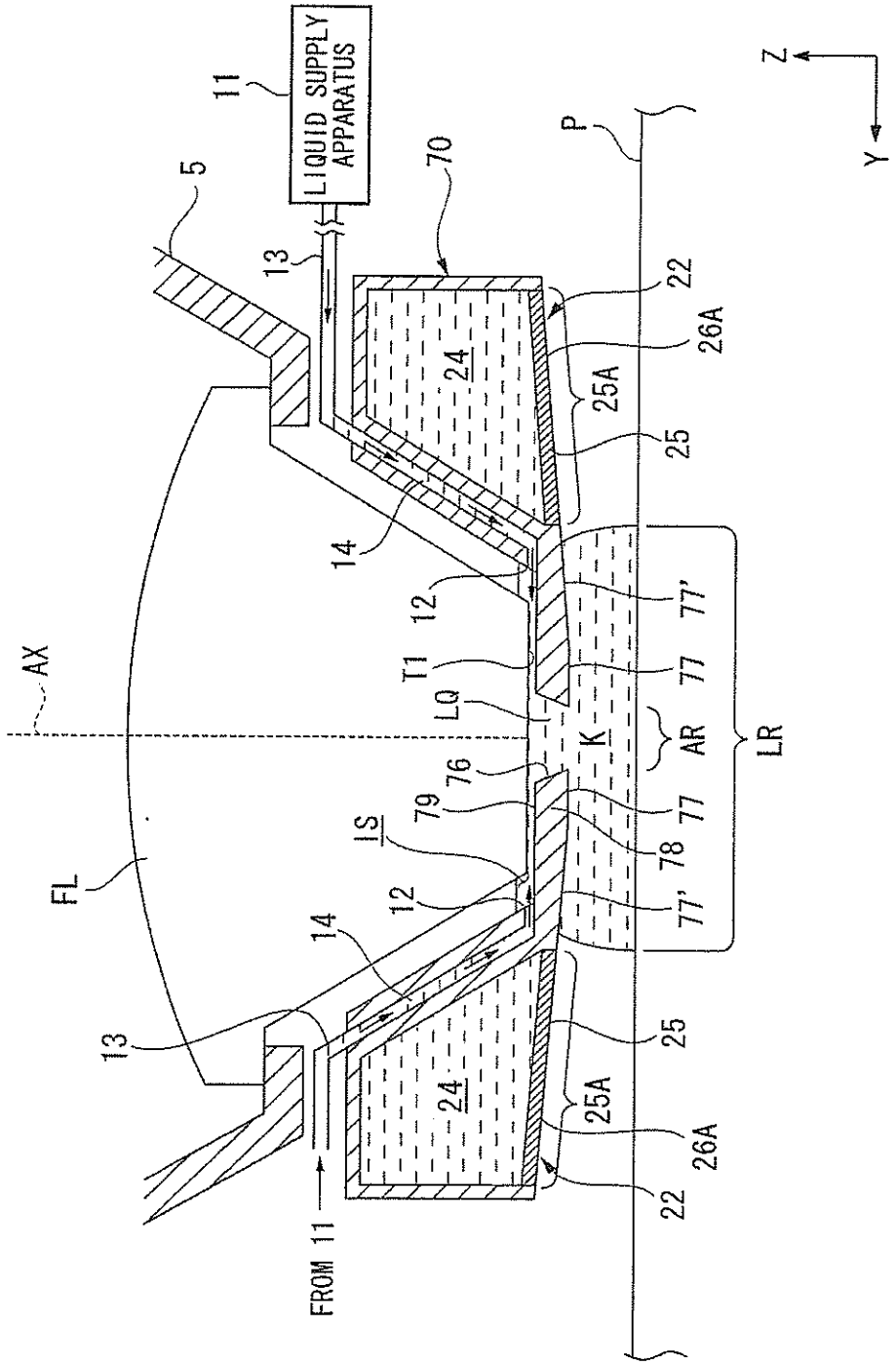
LIQUID SUPPLY APPARATUS
11
5
13
70
P
Z
Y
22
26A
25A
24
25
14
12
77'
T1
77
LQ
AX
K
AR
LR
76
79
77
IS
78
FL
77'
12
14
13
25
25A
24
26A
22
FROM 11

FIG. 18

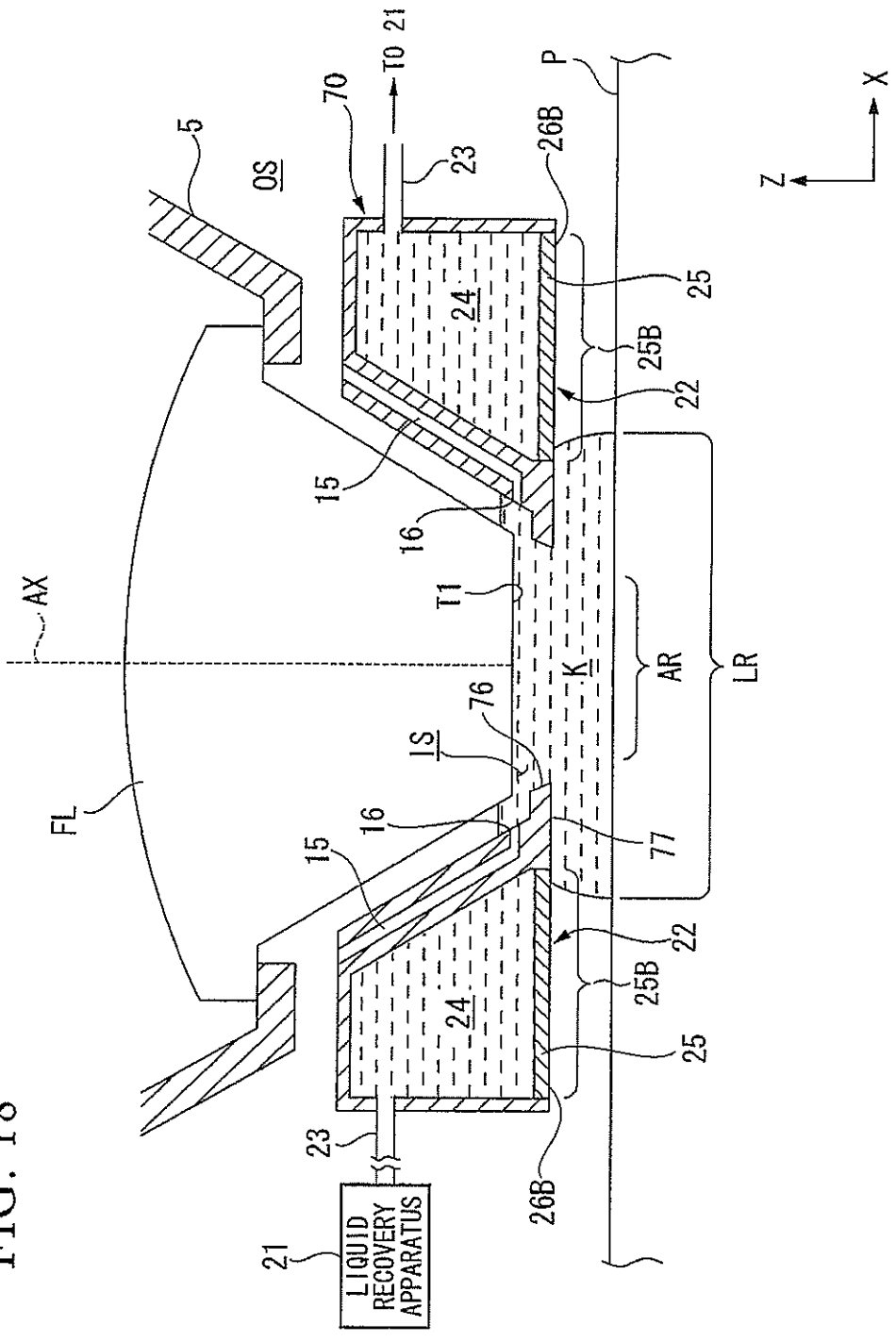
AX
FL
5
OS
70
TO 21
23
26B
P
25
24
25B
22
15
16
T1
K
AR
LR
76
IS
77
LIQUID RECOVERY APPARATUS
21
Z
X

FIG. 19A

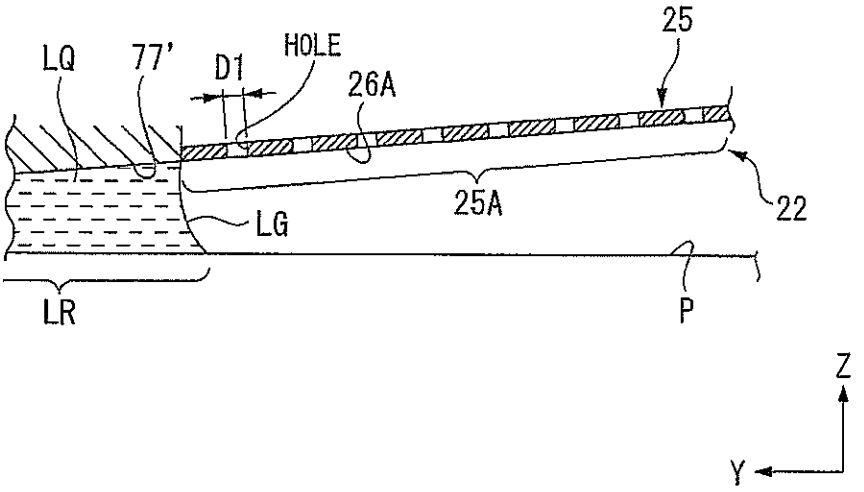

FIG. 19B

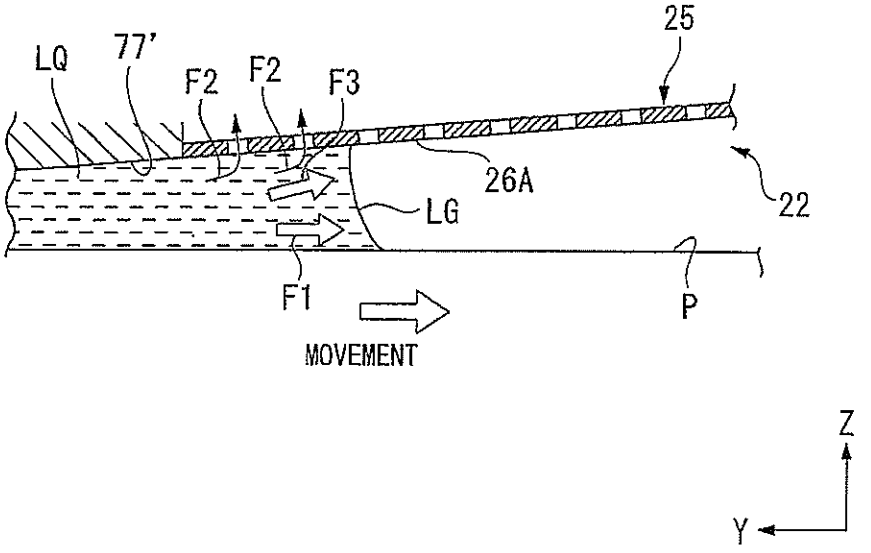

FIG. 20

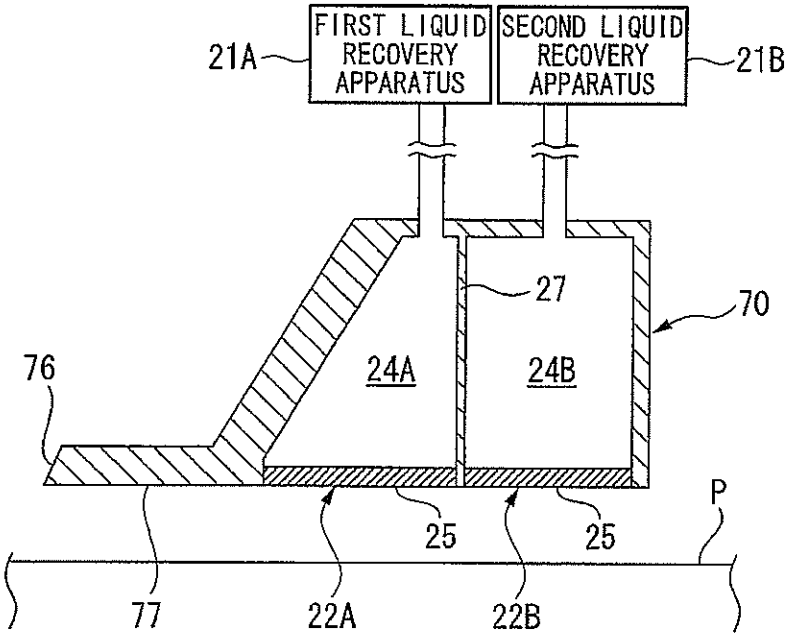
FIRST LIQUID RECOVERY APPARATUS
SECOND LIQUID RECOVERY APPARATUS
21A
21B
27
70
76
24A
24B
25
25
P
77
22A
22B

FIG. 21A

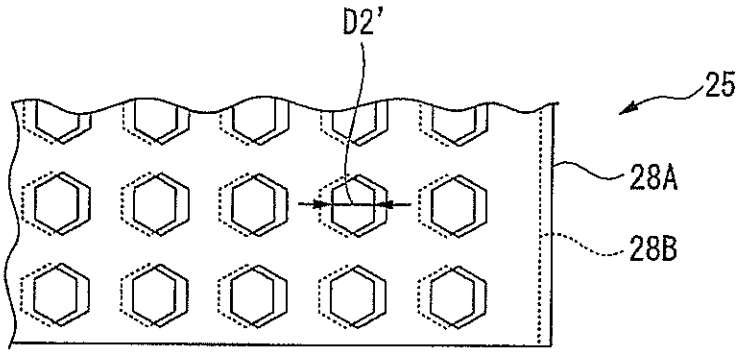

FIG. 21B

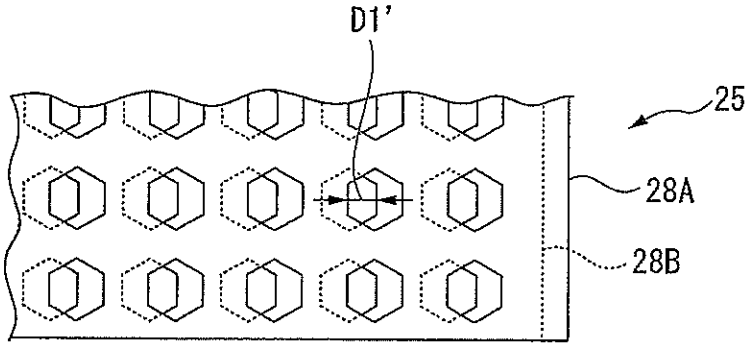

FIG. 22

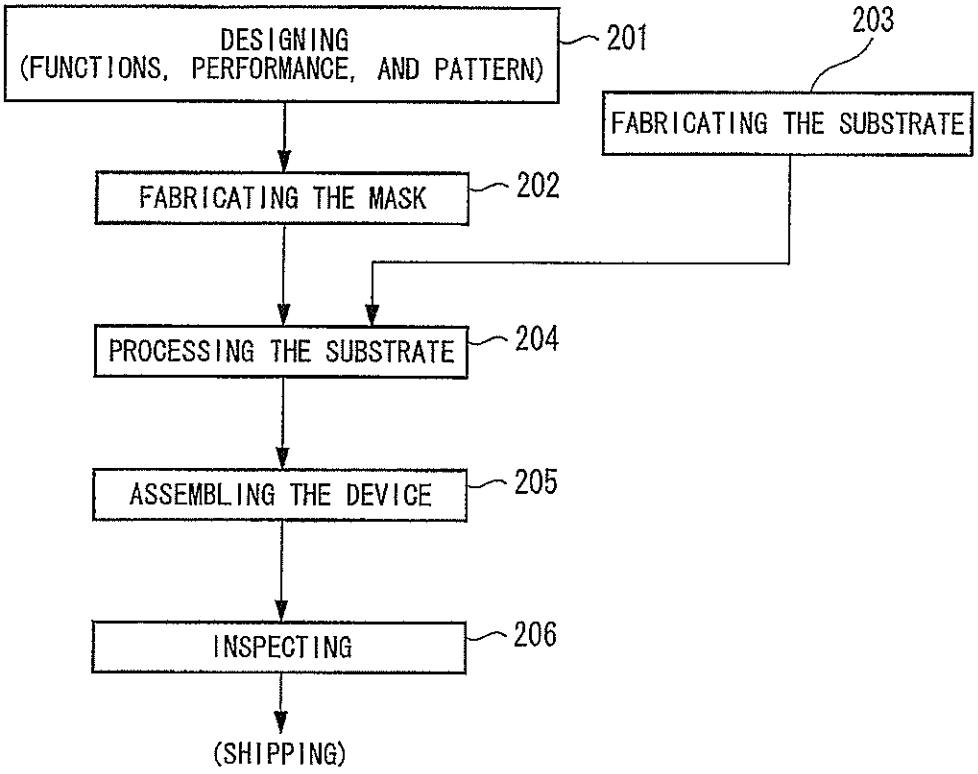
DESIGNING
(FUNCTIONS, PERFORMANCE, AND PATTERN)
201
203
FABRICATING THE SUBSTRATE
FABRICATING THE MASK
202
PROCESSING THE SUBSTRATE
204
ASSEMBLING THE DEVICE
205
INSPECTING
206
(SHIPPING)