(12) INTERNATIONAL APPLICATION PUBLISHED UNDER THE PATENT COOPERATION TREATY (PCT)

(19) World Intellectual Property Organization
International Bureau

(43) International Publication Date
28 August 2025 (28.08.2025)

WIPO | PCT

(10) International Publication Number
WO 2025/176422 A1

(51) International Patent Classification:
H04B 7/06 (2006.01)

(21) International Application Number:
PCT/EP2025/052053

(22) International Filing Date:
28 January 2025 (28.01.2025)

(25) Filing Language: English

(26) Publication Language: English

(30) Priority Data:
20245198 19 February 2024 (19.02.2024) FI

(71) Applicant: **NOKIA TECHNOLOGIES OY** [FI/FI]; Karakaari 7, 02610 Espoo (FI).

(72) Inventors: **BARACCA, Paolo**; Nokia Solutions and Networks GmbH & Co. KG, Werinherstrasse 91, 81541 Munich (DE). **CAUDURO DIAS DE PAIVA, Rafael**; Nokia Denmark A/S, Alfred Nobels Vej 27, 9220 Aalborg (DK). **DIMNIK, Riikka Karoliina**; Nokia Solutions and Networks Oy, Karakaari 13, 02610 Espoo (FI). **CAPORAL DEL BARRIO, Samantha**; Nokia Denmark A/S, Alfred Nobels Vej 27, 9220 Aalborg (DK).

(74) Agent: **NOKIA EPO REPRESENTATIVES**; Nokia Technologies Oy, Karakaari 7, 02610 ESPOO (FI).

(81) Designated States *(unless otherwise indicated, for every kind of national protection available)*: AE, AG, AL, AM, AO, AT, AU, AZ, BA, BB, BG, BH, BN, BR, BW, BY, BZ, CA, CH, CL, CN, CO, CR, CU, CV, CZ, DE, DJ, DK, DM, DO, DZ, EC, EE, EG, ES, FI, GB, GD, GE, GH, GM, GT, HN, HR, HU, ID, IL, IN, IQ, IR, IS, IT, JM, JO, JP, KE, KG, KH, KN, KP, KR, KW, KZ, LA, LC, LK, LR, LS, LU, LY, MA, MD, MG, MK, MN, MU, MW, MX, MY, MZ, NA, NG, NI, NO, NZ, OM, PA, PE, PG, PH, PL, PT, QA, RO, RS, RU, RW, SA, SC, SD, SE, SG, SK, SL, ST, SV, SY, TH, TJ, TM, TN, TR, TT, TZ, UA, UG, US, UY, UZ, VC, VN, WS, ZA, ZM, ZW.

WO 2025/176422 A1

(54) **Title:** DYNAMIC TRANSMISSION CONFIGURATION INDICATOR ACTIVATION

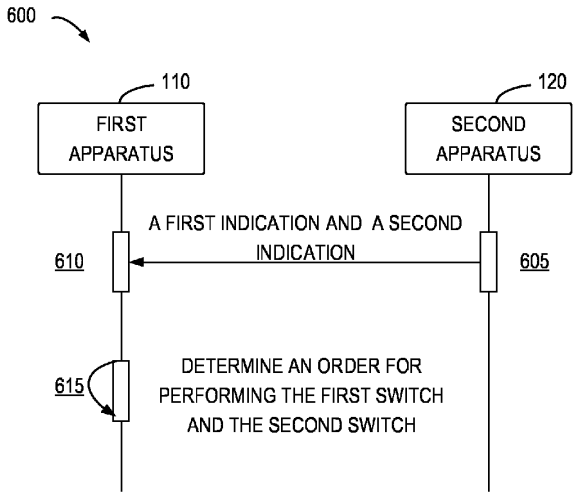

FIG. 6

(57) **Abstract:** Example embodiments of the disclosure relate to methods, apparatuses, and a computer readable storage medium for dynamic transmission configuration indicator (TCI) activation In a method, a first apparatus receives a first indication and a second indication. The first indication indicates a first switch from a first TCI state to a first target TCI state is to be performed, and the second indication indicates a second switch from a second source TCI state to a second target TCI state is to be performed. The first source TCI state has been activated for a first network device, and the second source TCI state has been activated for a second network device. Reference signals associated with the first target TCI state and the second target TCI state are adjacent. The first apparatus determines an order for performing the first switch and the second switch.

[Continued on next page]

(84) **Designated States** *(unless otherwise indicated, for every kind of regional protection available)*: ARIPO (BW, CV, GH, GM, KE, LR, LS, MW, MZ, NA, RW, SC, SD, SL, ST, SZ, TZ, UG, ZM, ZW), Eurasian (AM, AZ, BY, KG, KZ, RU, TJ, TM), European (AL, AT, BE, BG, CH, CY, CZ, DE, DK, EE, ES, FI, FR, GB, GR, HR, HU, IE, IS, IT, LT, LU, LV, MC, ME, MK, MT, NL, NO, PL, PT, RO, RS, SE, SI, SK, SM, TR), OAPI (BF, BJ, CF, CG, CI, CM, GA, GN, GQ, GW, KM, ML, MR, NE, SN, TD, TG).

Published:

— *with international search report (Art. 21(3))*

— *in black and white; the international application as filed contained color or greyscale and is available for download from PATENTSCOPE*