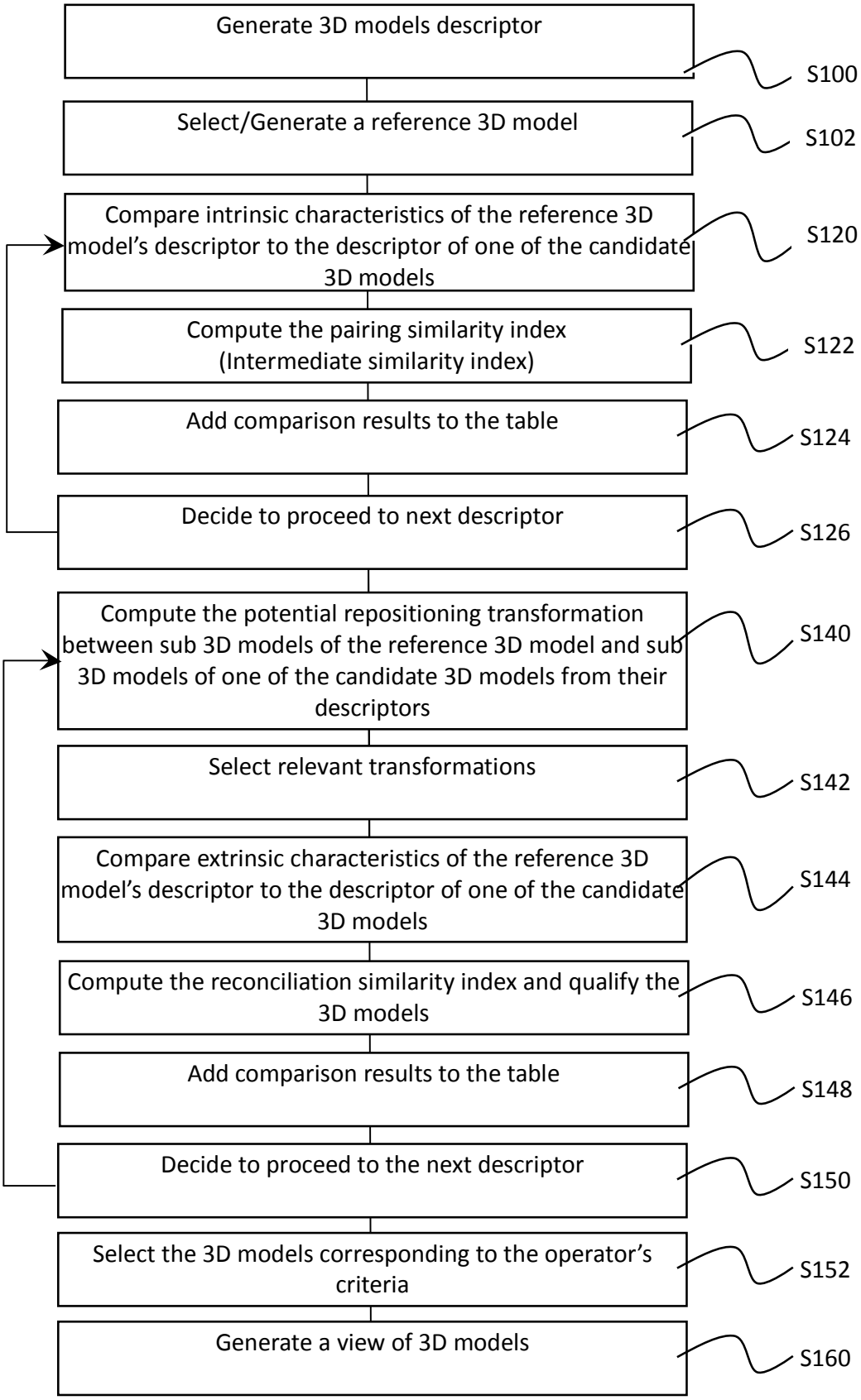
Generate 3D models descriptor
S100
Select/Generate a reference 3D model
S102
Compare intrinsic characteristics of the reference 3D model's descriptor to the descriptor of one of the candidate 3D models
S120
Compute the pairing similarity index (Intermediate similarity index)
S122
Add comparison results to the table
S124
Decide to proceed to next descriptor
S126
Compute the potential repositioning transformation between sub 3D models of the reference 3D model and sub 3D models of one of the candidate 3D models from their descriptors
S140
Select relevant transformations
S142
Compare extrinsic characteristics of the reference 3D model's descriptor to the descriptor of one of the candidate 3D models
S144
Compute the reconciliation similarity index and qualify the 3D models
S146
Add comparison results to the table
S148
Decide to proceed to the next descriptor
S150
Select the 3D models corresponding to the operator's criteria
S152
Generate a view of 3D models
S160

Figure 1

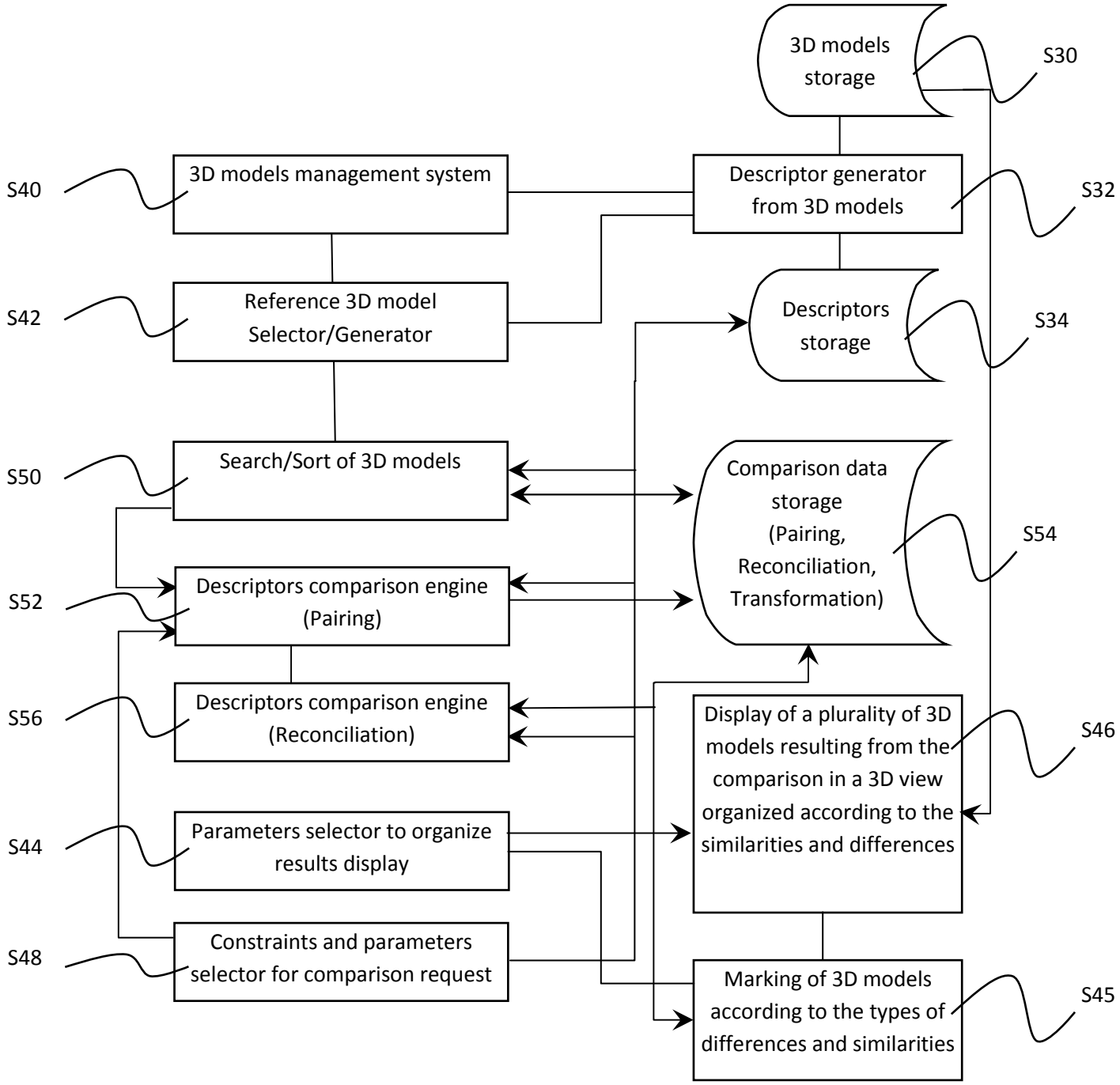
3D models storage
S30
S40
3D models management system
Descriptor generator from 3D models
S32
S42
Reference 3D model Selector/Generator
Descriptors storage
S34
S50
Search/Sort of 3D models
Comparison data storage (Pairing, Reconciliation, Transformation)
S54
S52
Descriptors comparison engine (Pairing)
S56
Descriptors comparison engine (Reconciliation)
Display of a plurality of 3D models resulting from the comparison in a 3D view organized according to the similarities and differences
S46
S44
Parameters selector to organize results display
S48
Constraints and parameters selector for comparison request
Marking of 3D models according to the types of differences and similarities
S45

Figure 2

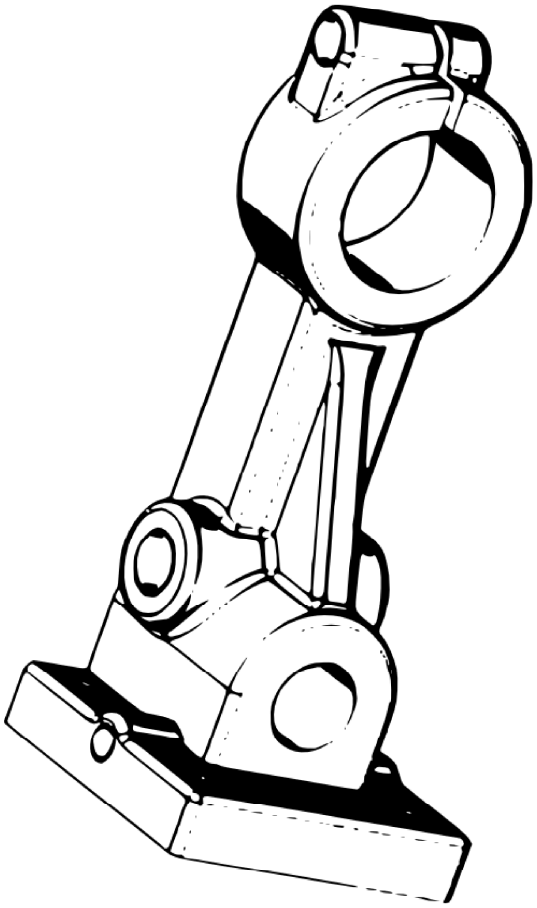

Figure 3

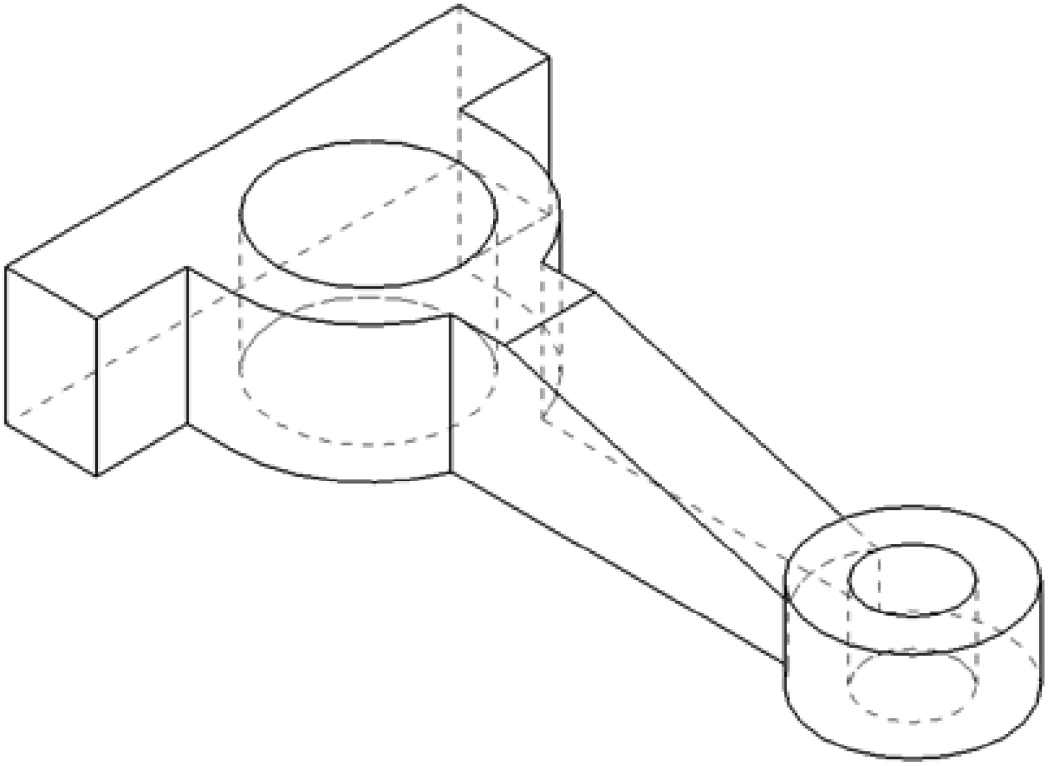

Figure 4

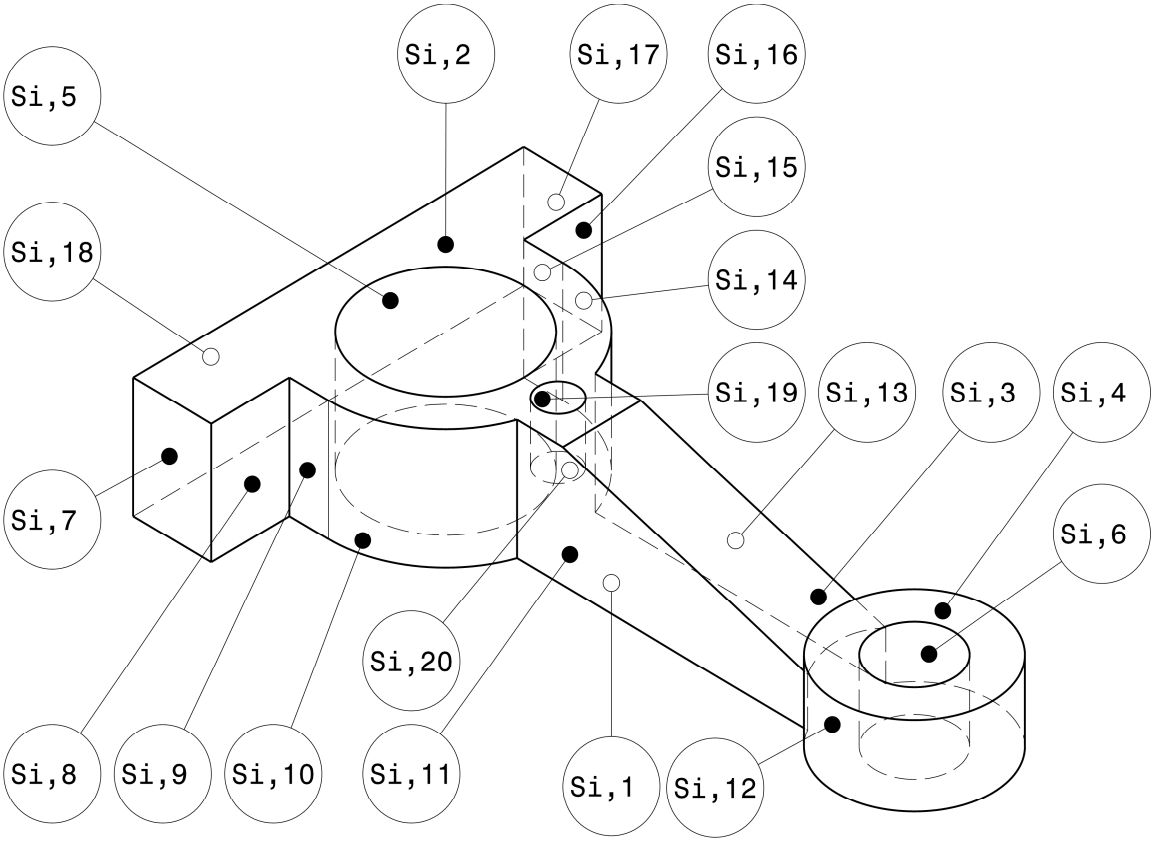
Si,2
Si,17
Si,16
Si,5
Si,15
Si,18
Si,14
Si,19
Si,13
Si,3
Si,4
Si,7
Si,6
Si,20
Si,8
Si,9
Si,10
Si,11
Si,1
Si,12

Figure 5

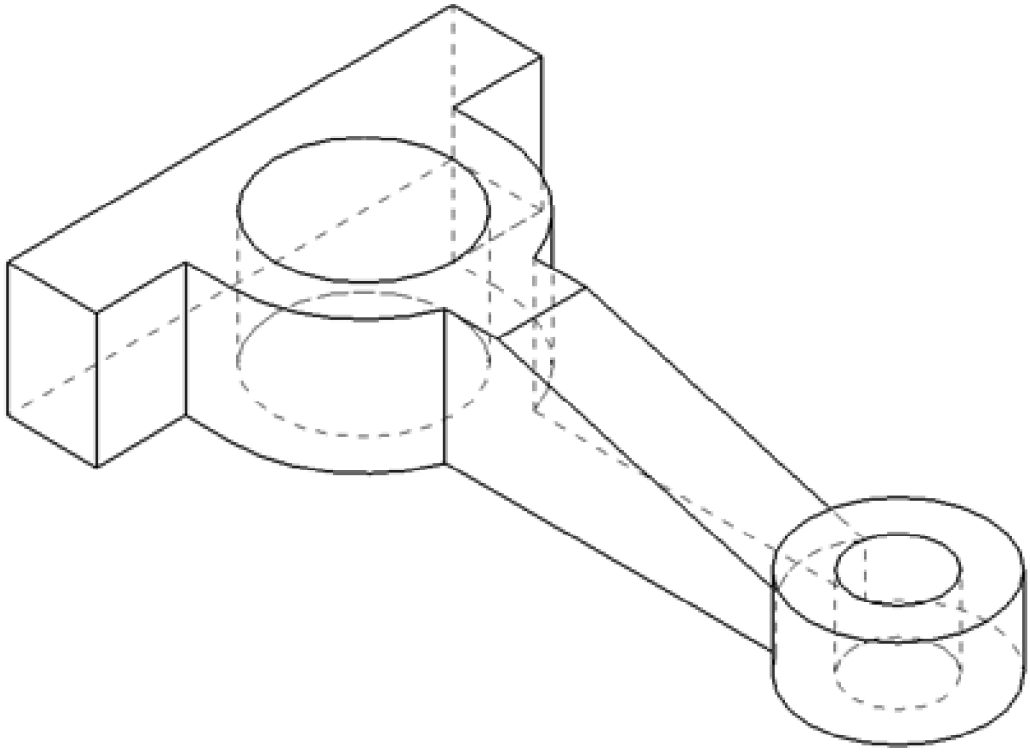

Figure 6A

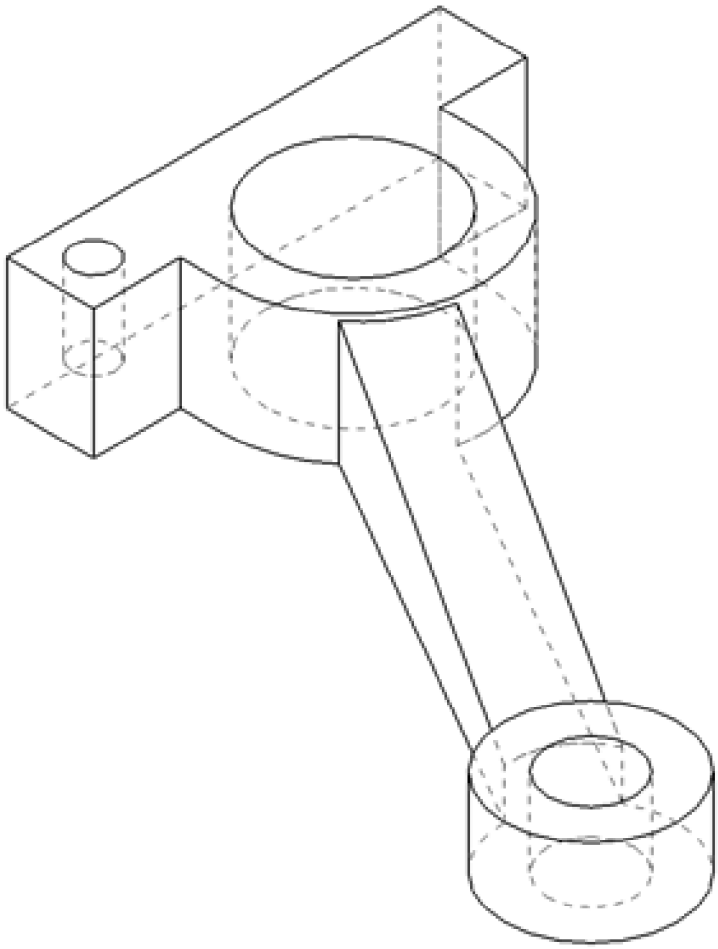

Figure 6B

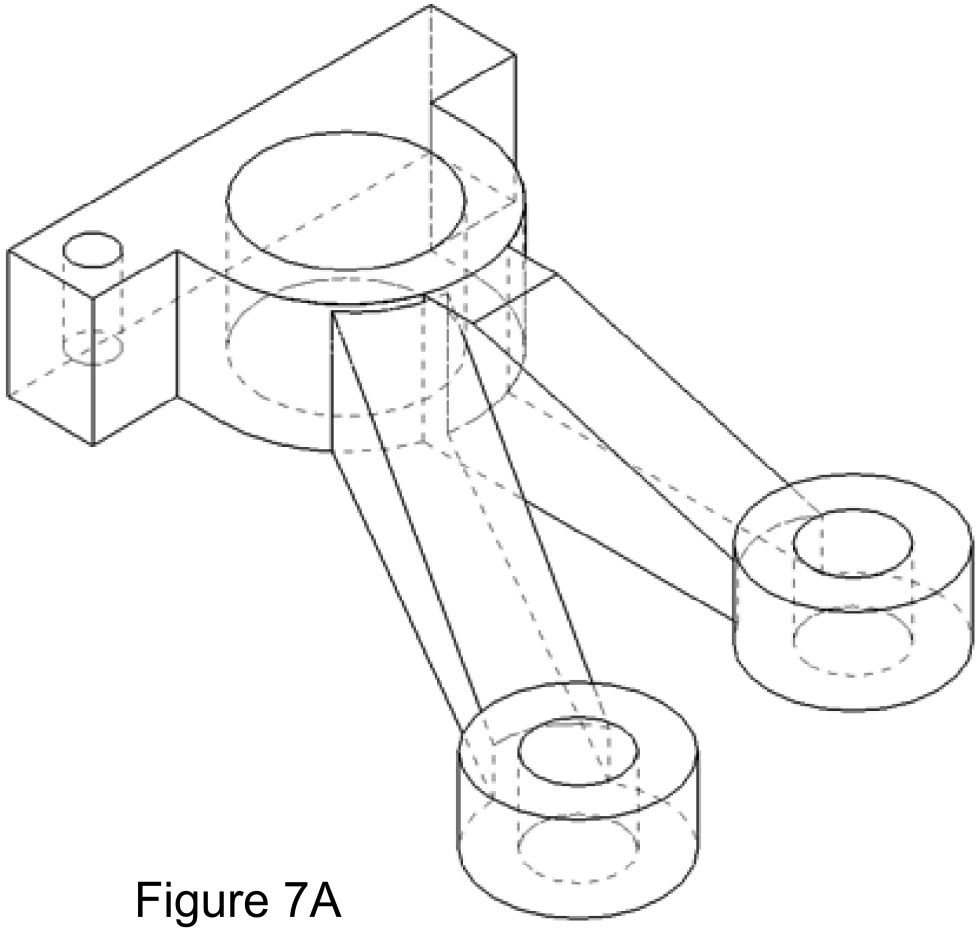

Figure 7A

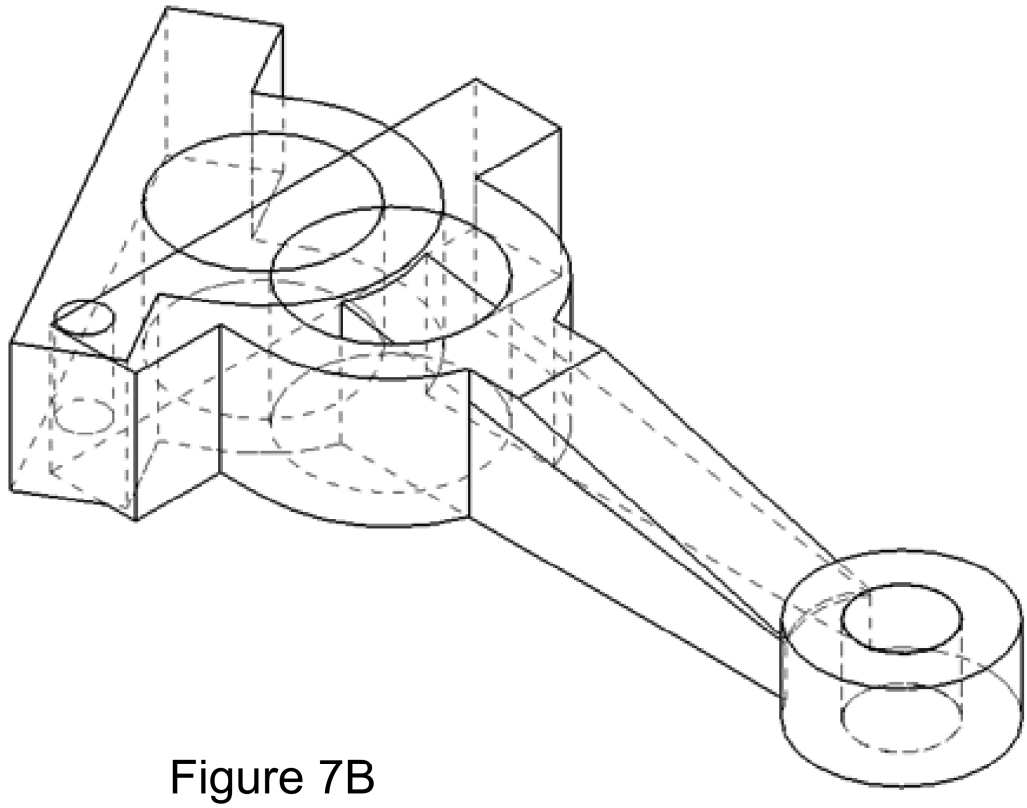

Figure 7B

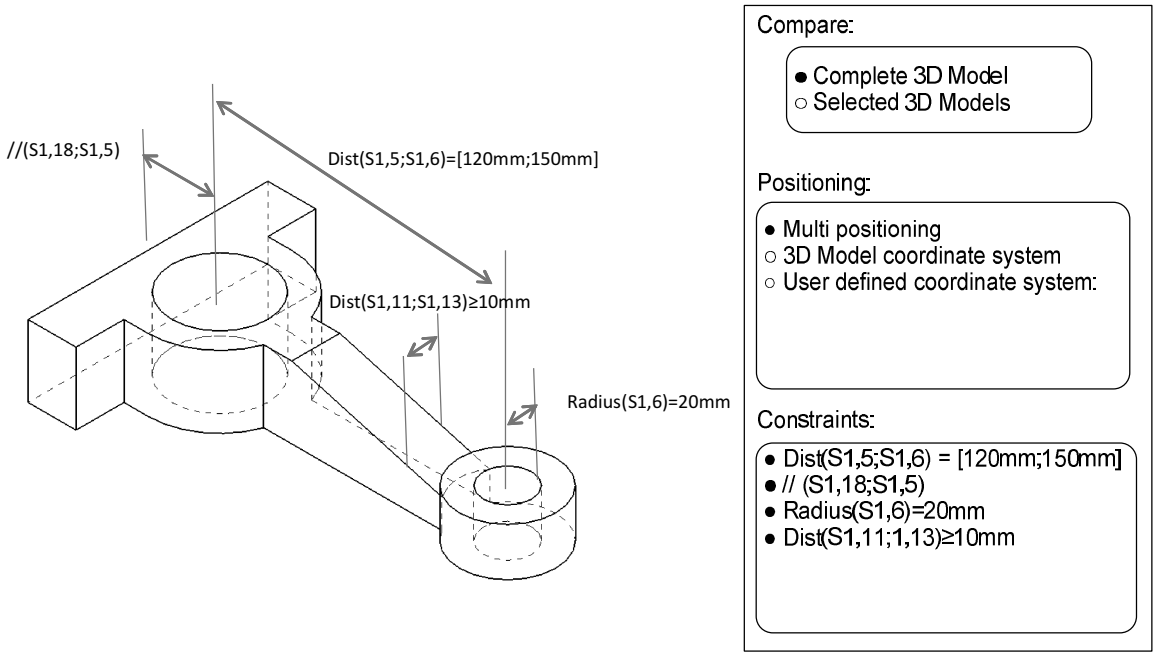
//(S1,18;S1,5)
Dist(S1,5;S1,6)=[120mm;150mm]
Dist(S1,11;S1,13)≥10mm
Radius(S1,6)=20mm
Compare:
● Complete 3D Model
○ Selected 3D Models
Positioning:
● Multi positioning
○ 3D Model coordinate system
○ User defined coordinate system:
Constraints:
● Dist(S1,5;S1,6) = [120mm;150mm]
● // (S1,18;S1,5)
● Radius(S1,6)=20mm
● Dist(S1,11;1,13)≥10mm

Figure 8

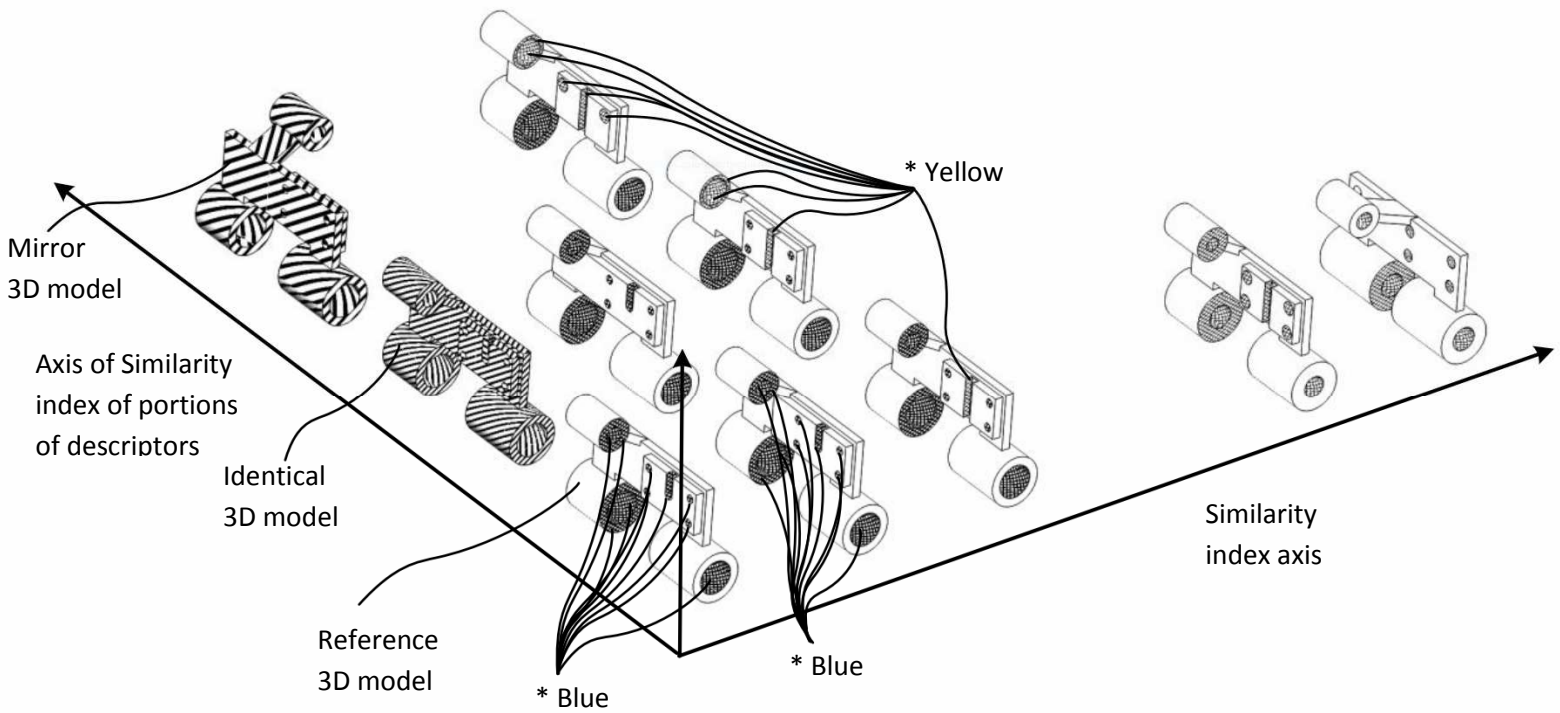
* Yellow
Mirror
3D model
Axis of Similarity
index of portions
of descriptors
Identical
3D model
Reference
3D model
* Blue
* Blue
Similarity
index axis

Figure 9

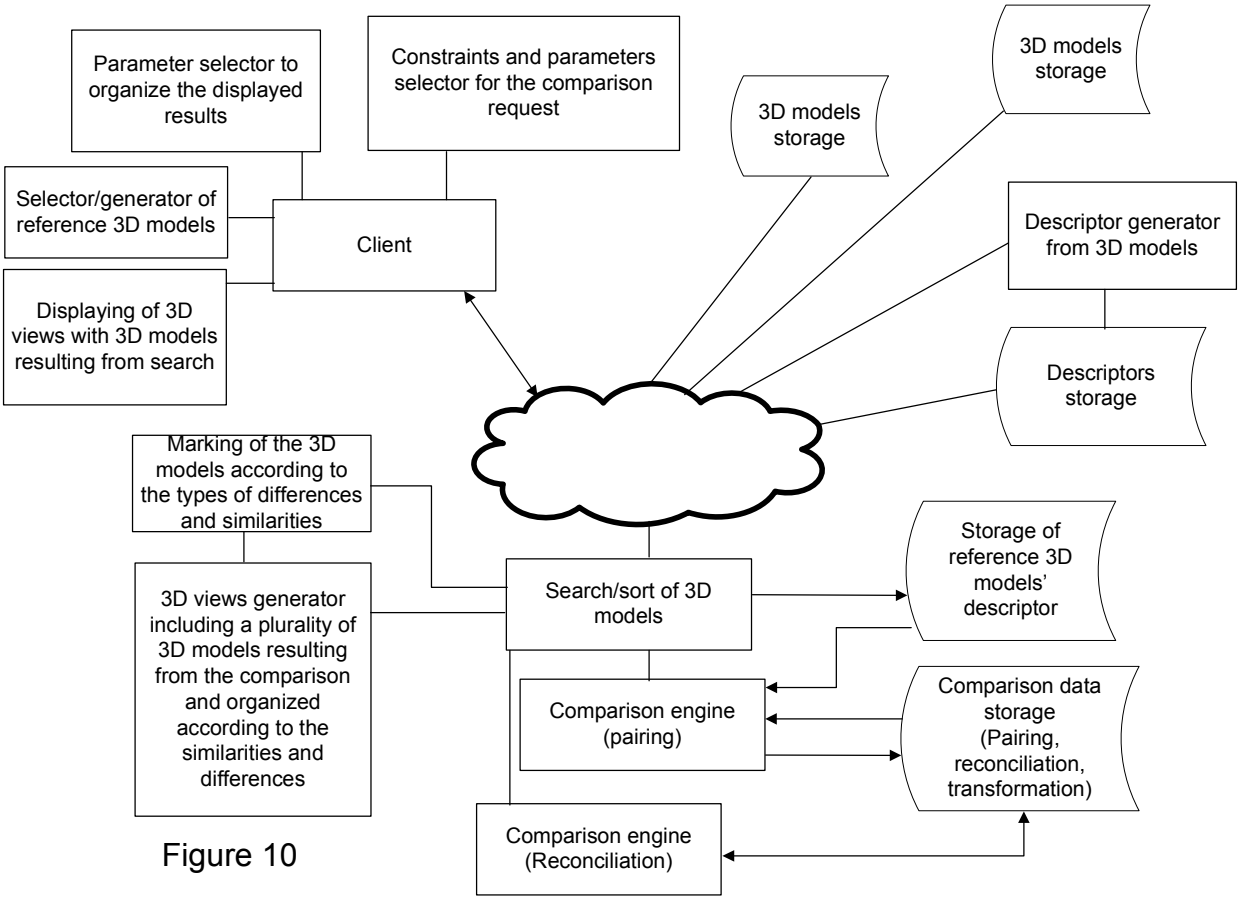
Parameter selector to organize the displayed results
Constraints and parameters selector for the comparison request
3D models storage
3D models storage
Selector/generator of reference 3D models
Client
Descriptor generator from 3D models
Displaying of 3D views with 3D models resulting from search
Descriptors storage
Marking of the 3D models according to the types of differences and similarities
Storage of reference 3D models' descriptor
3D views generator including a plurality of 3D models resulting from the comparison and organized according to the similarities and differences
Search/sort of 3D models
Comparison engine (pairing)
Comparison data storage (Pairing, reconciliation, transformation)
Comparison engine (Reconciliation)

Figure 10