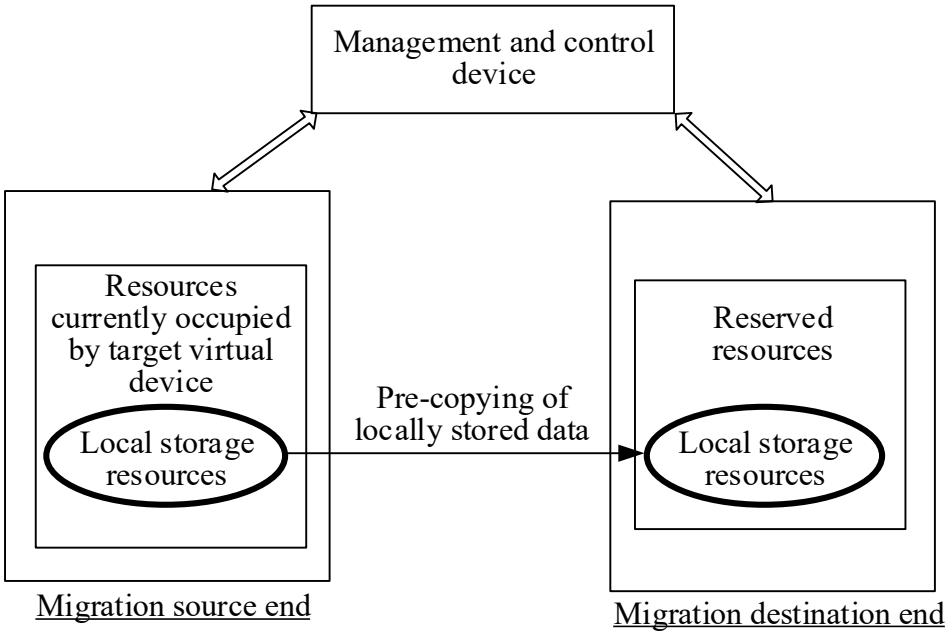
Management and control device
Resources currently occupied by target virtual device
Local storage resources
Pre-copying of locally stored data
Reserved resources
Local storage resources
Migration source end
Migration destination end

FIG. 1

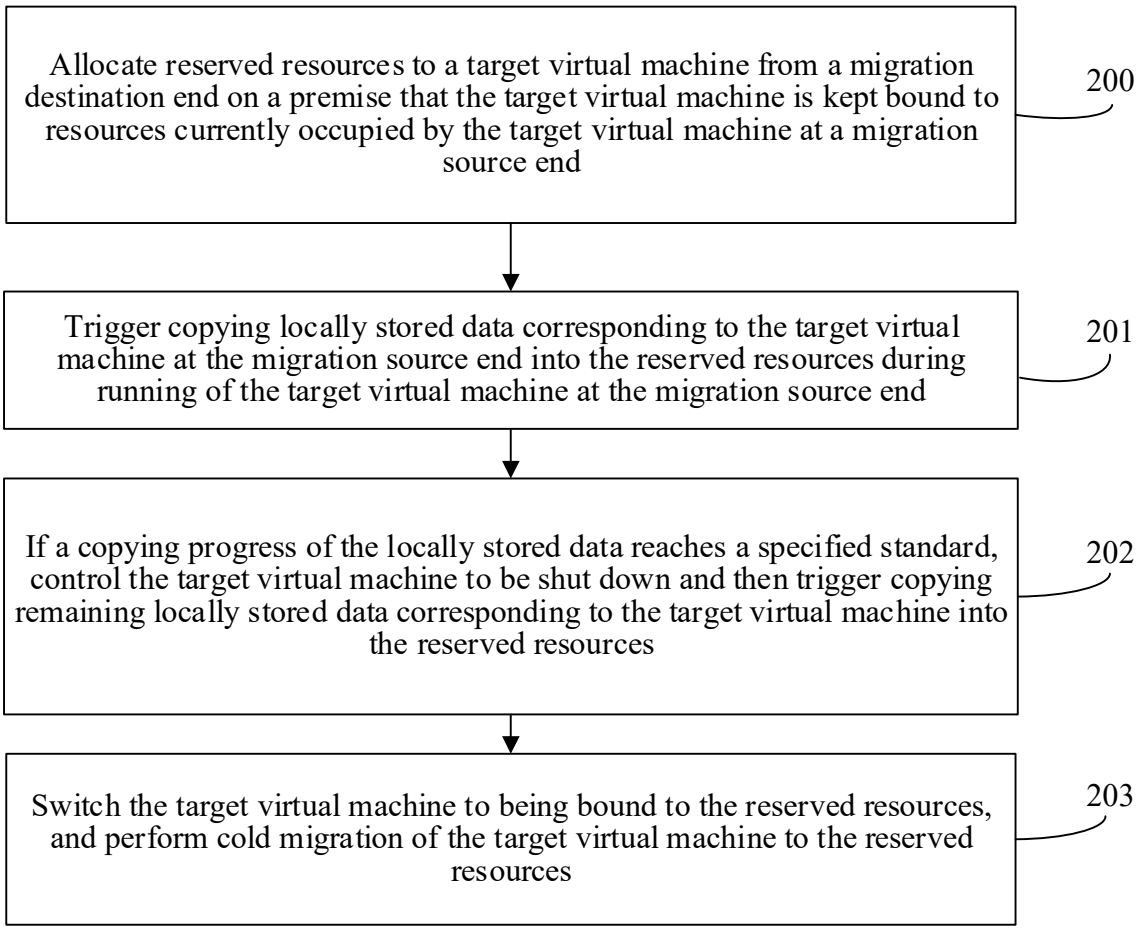
Allocate reserved resources to a target virtual machine from a migration destination end on a premise that the target virtual machine is kept bound to resources currently occupied by the target virtual machine at a migration source end
200
Trigger copying locally stored data corresponding to the target virtual machine at the migration source end into the reserved resources during running of the target virtual machine at the migration source end
201
If a copying progress of the locally stored data reaches a specified standard, control the target virtual machine to be shut down and then trigger copying remaining locally stored data corresponding to the target virtual machine into the reserved resources
202
Switch the target virtual machine to being bound to the reserved resources, and perform cold migration of the target virtual machine to the reserved resources
203

FIG. 2

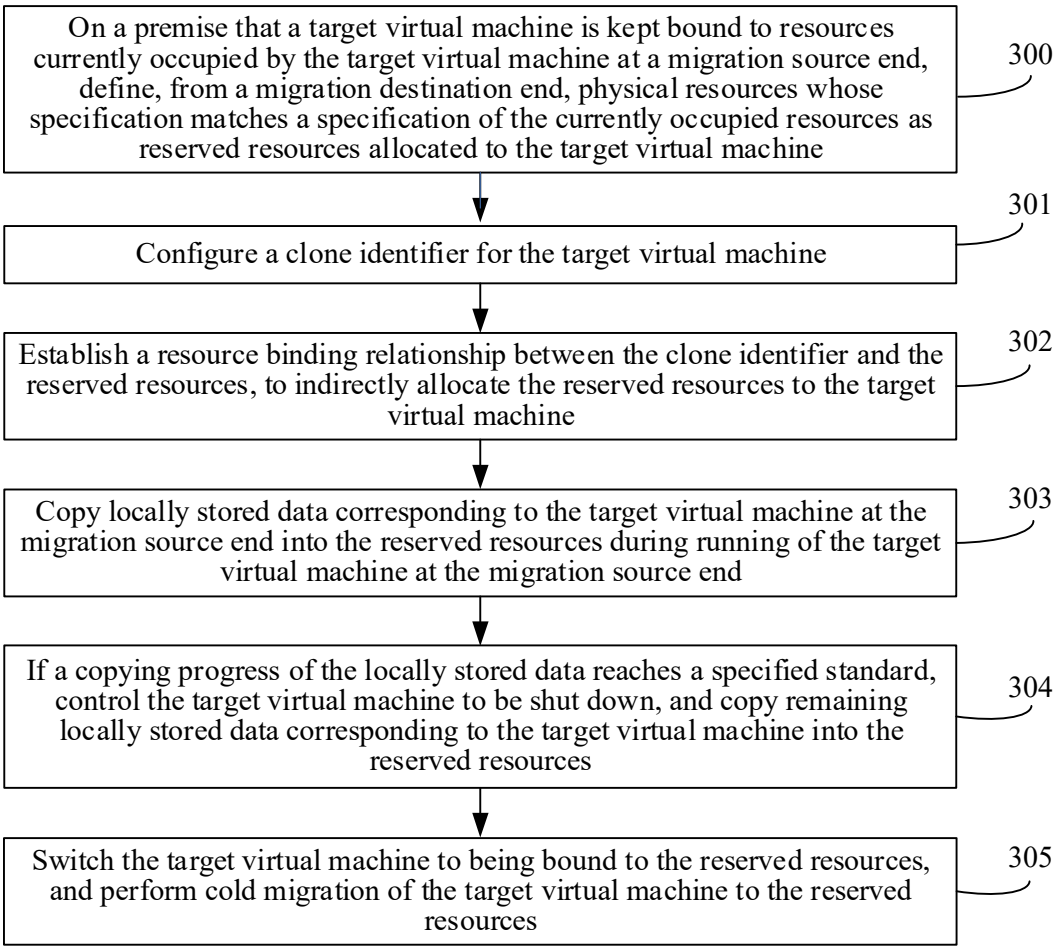
On a premise that a target virtual machine is kept bound to resources currently occupied by the target virtual machine at a migration source end, define, from a migration destination end, physical resources whose specification matches a specification of the currently occupied resources as reserved resources allocated to the target virtual machine
300
Configure a clone identifier for the target virtual machine
301
Establish a resource binding relationship between the clone identifier and the reserved resources, to indirectly allocate the reserved resources to the target virtual machine
302
Copy locally stored data corresponding to the target virtual machine at the migration source end into the reserved resources during running of the target virtual machine at the migration source end
303
If a copying progress of the locally stored data reaches a specified standard, control the target virtual machine to be shut down, and copy remaining locally stored data corresponding to the target virtual machine into the reserved resources
304
Switch the target virtual machine to being bound to the reserved resources, and perform cold migration of the target virtual machine to the reserved resources
305

FIG. 3

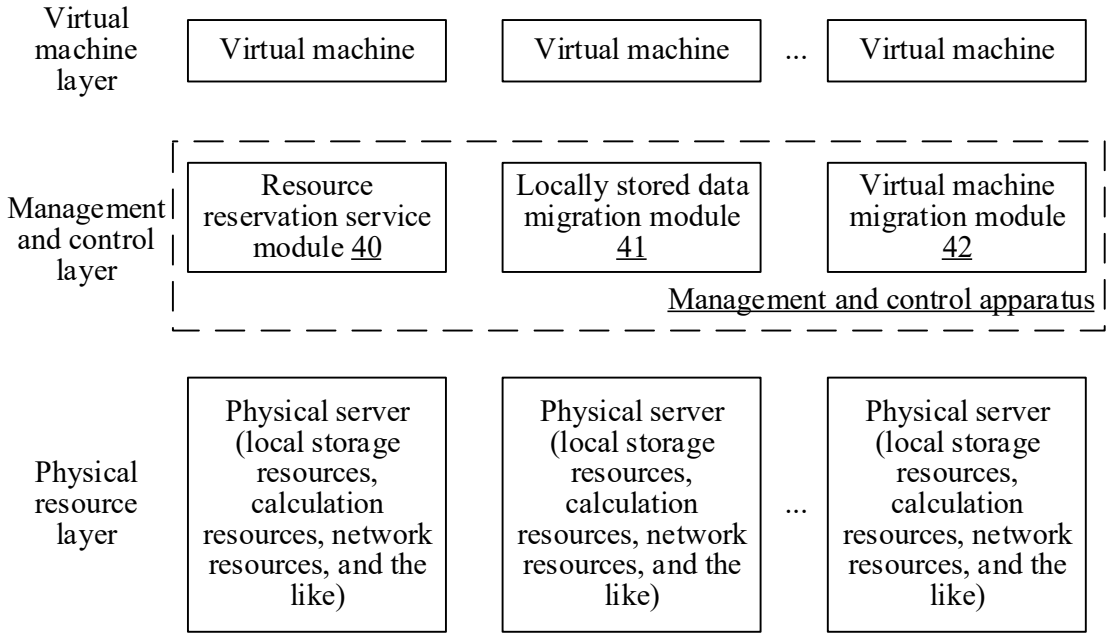
Virtual machine layer
Virtual machine
Virtual machine
...
Virtual machine
Management and control layer
Resource reservation service module 40
Locally stored data migration module 41
Virtual machine migration module 42
Management and control apparatus
Physical resource layer
Physical server (local storage resources, calculation resources, network resources, and the like)
Physical server (local storage resources, calculation resources, network resources, and the like)
...
Physical server (local storage resources, calculation resources, network resources, and the like)

FIG. 4

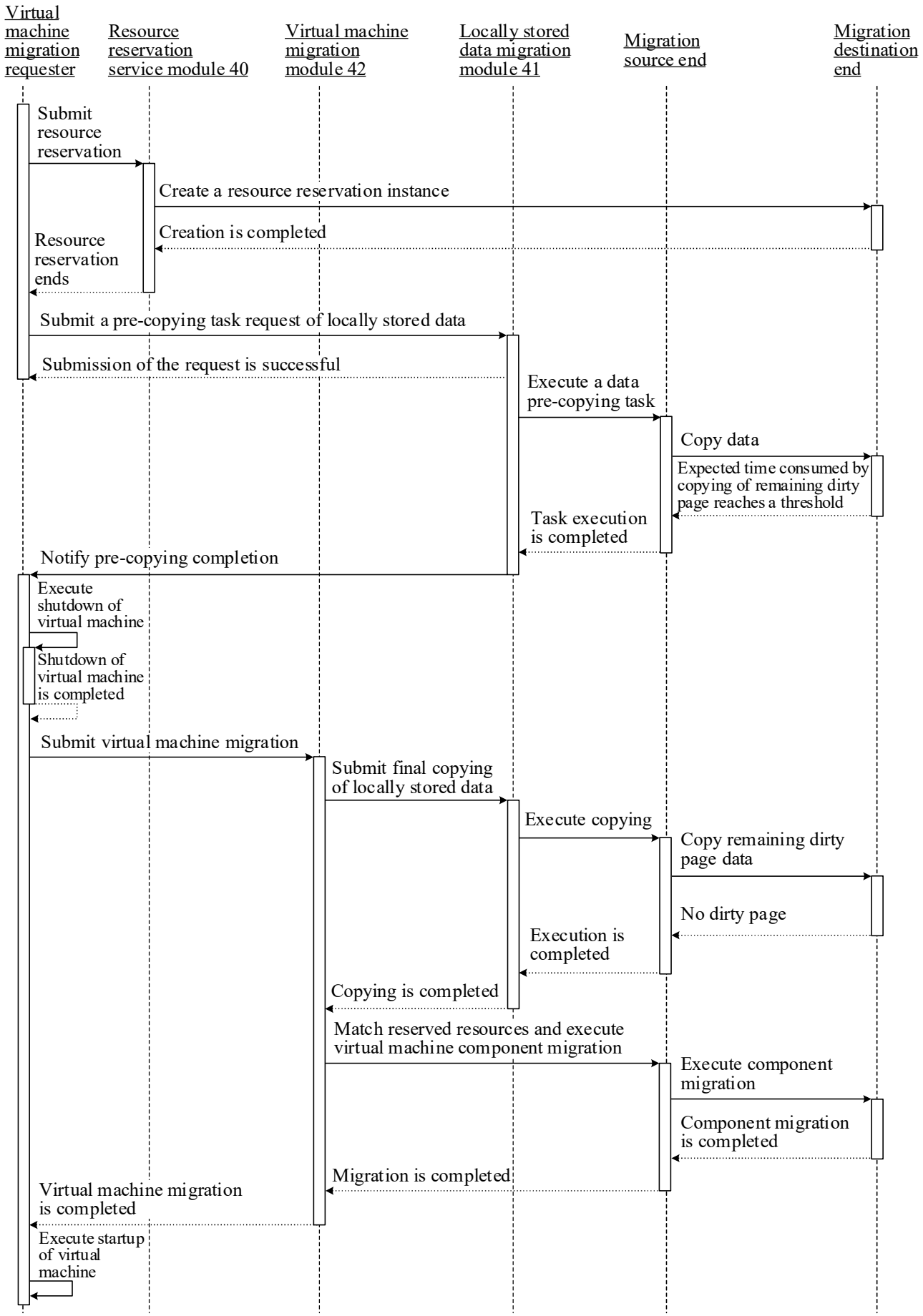
Virtual machine migration requester
Resource reservation service module 40
Virtual machine migration module 42
Locally stored data migration module 41
Migration source end
Migration destination end
Submit resource reservation
Create a resource reservation instance
Creation is completed
Resource reservation ends
Submit a pre-copying task request of locally stored data
Submission of the request is successful
Execute a data pre-copying task
Copy data
Expected time consumed by copying of remaining dirty page reaches a threshold
Task execution is completed
Notify pre-copying completion
Execute shutdown of virtual machine
Shutdown of virtual machine is completed
Submit virtual machine migration
Submit final copying of locally stored data
Execute copying
Copy remaining dirty page data
No dirty page
Execution is completed
Copying is completed
Match reserved resources and execute virtual machine component migration
Execute component migration
Component migration is completed
Migration is completed
Virtual machine migration is completed
Execute startup of virtual machine

FIG. 5

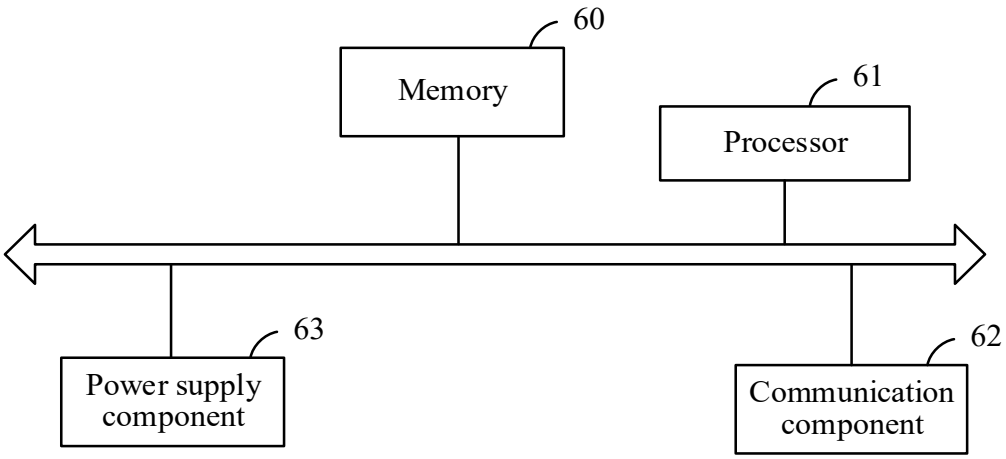
60
Memory
61
Processor
63
Power supply component
62
Communication component

FIG. 6