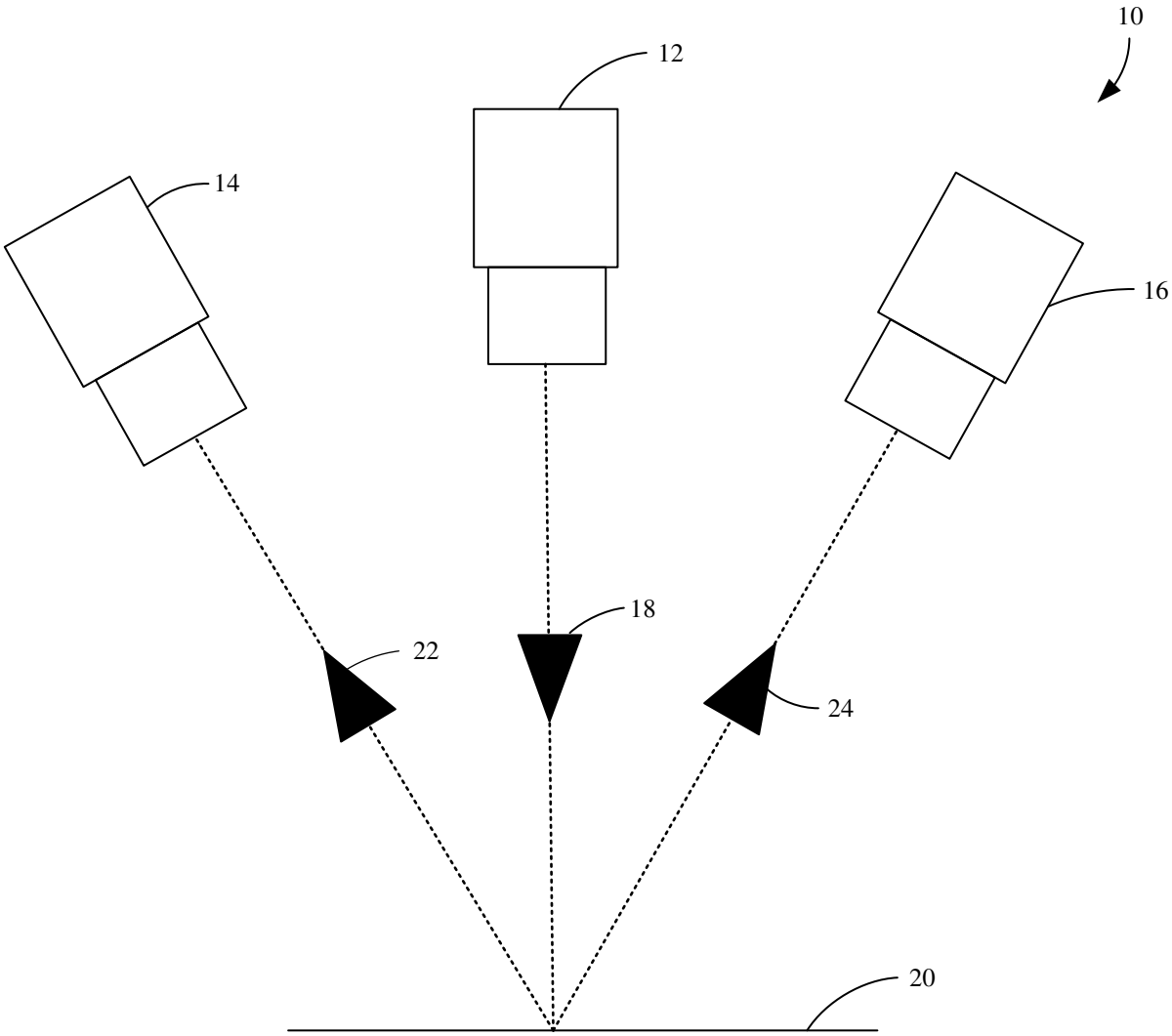

FIG. 1

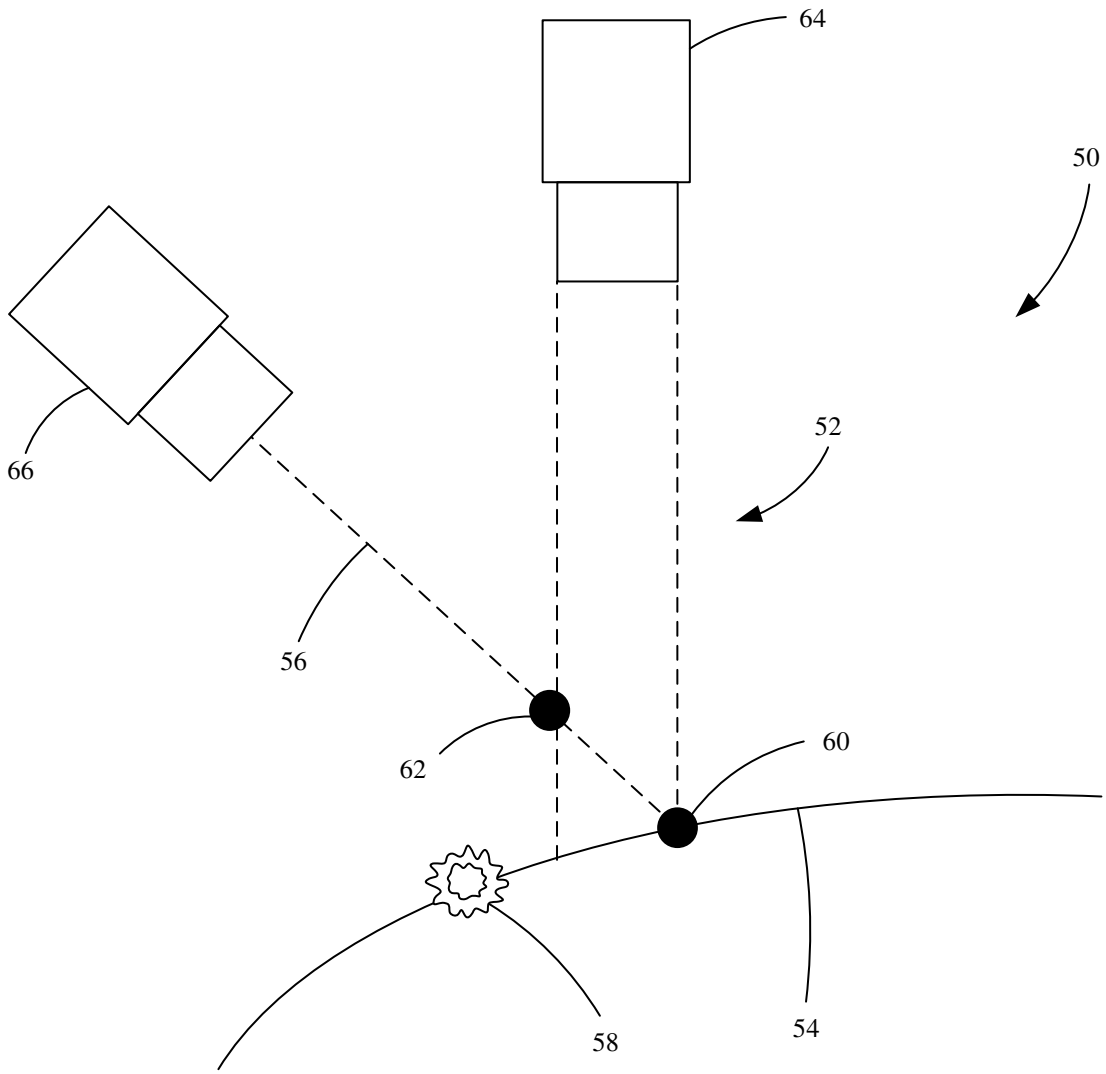

FIG. 2A

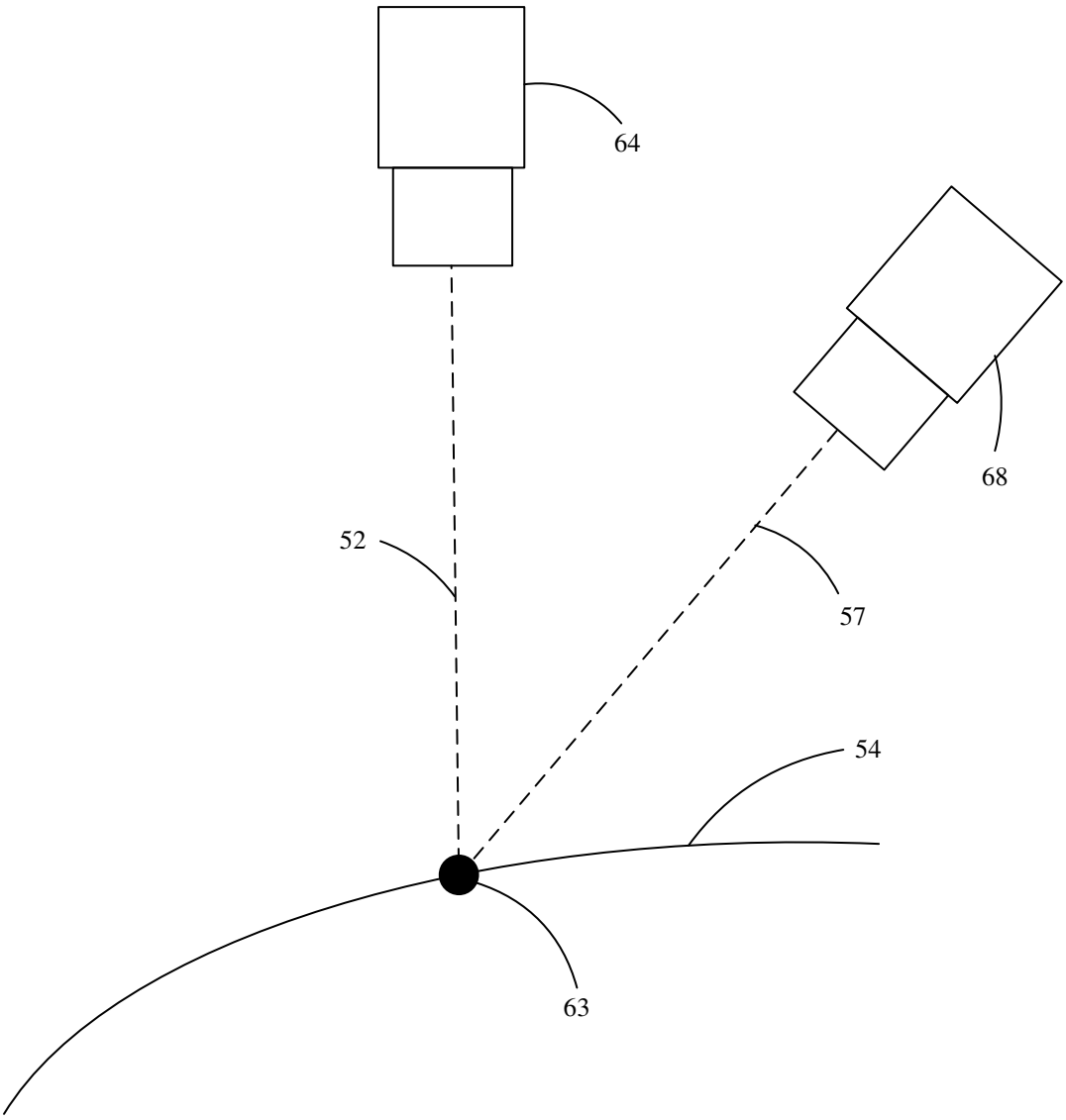

FIG. 2B

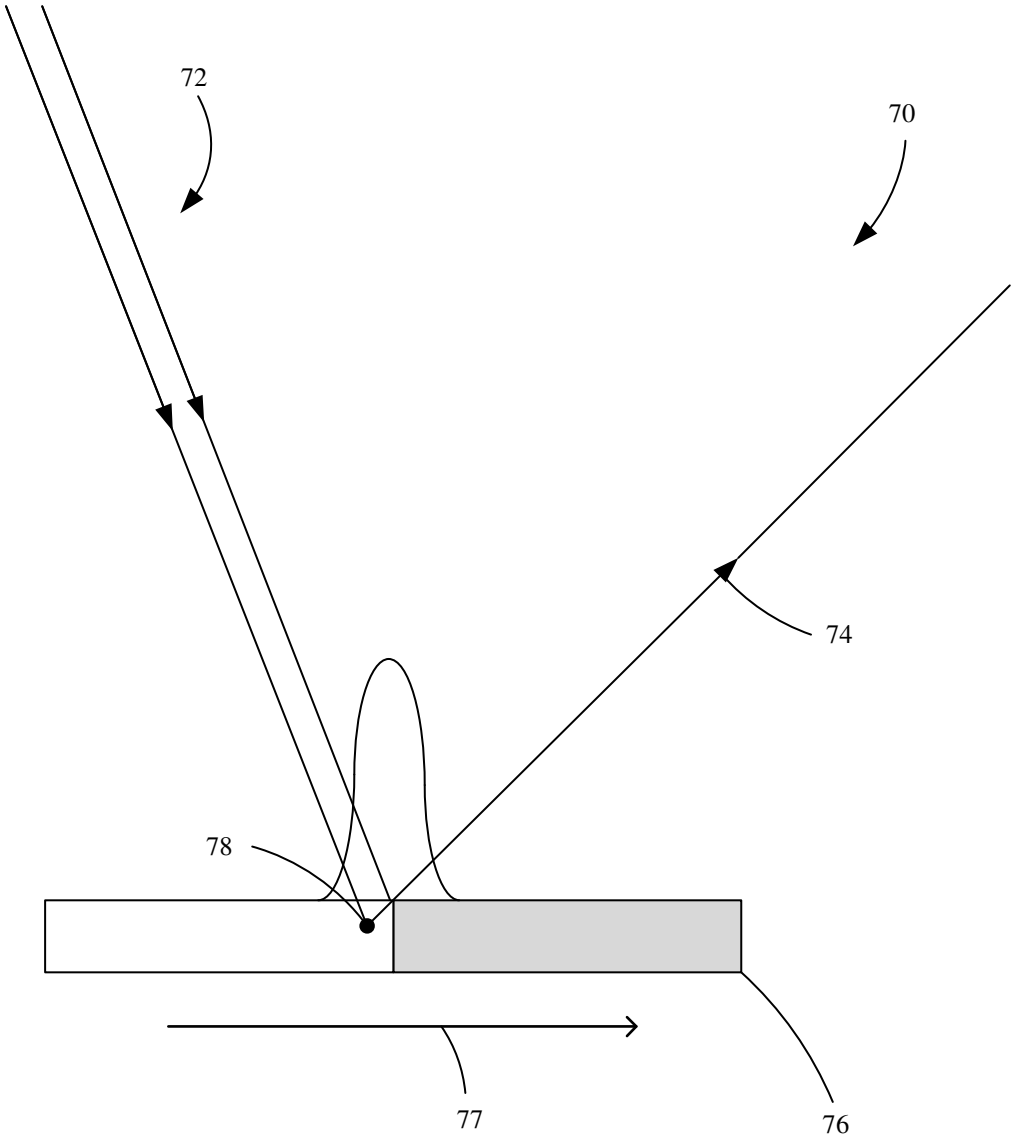

FIG. 2C

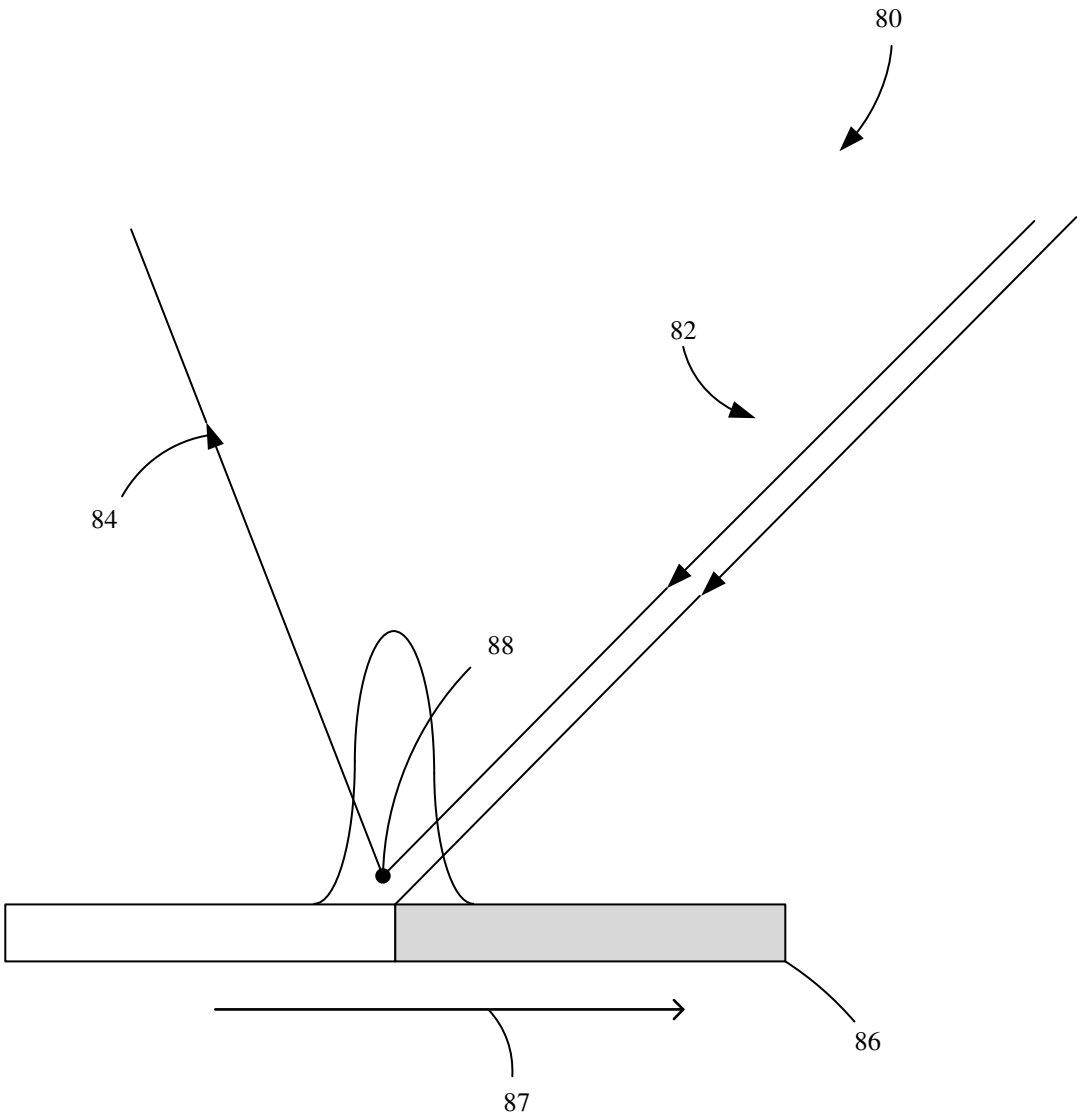

FIG. 2D

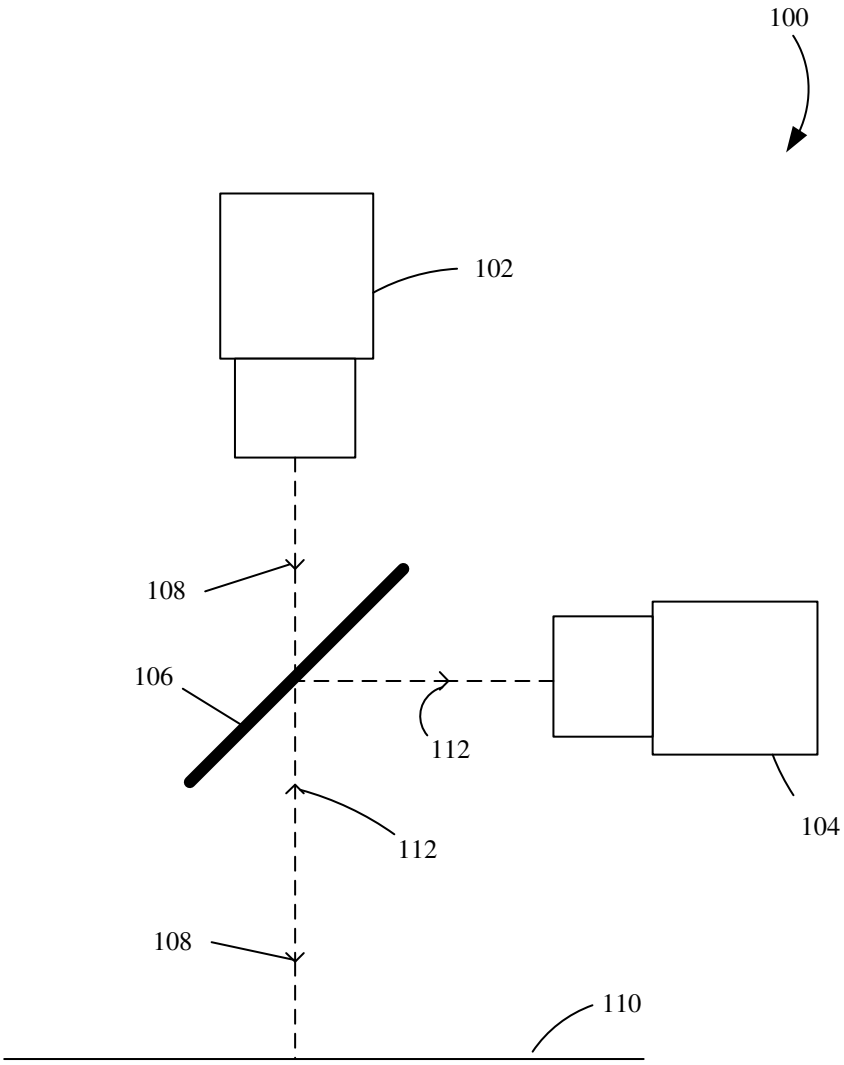

FIG. 3A

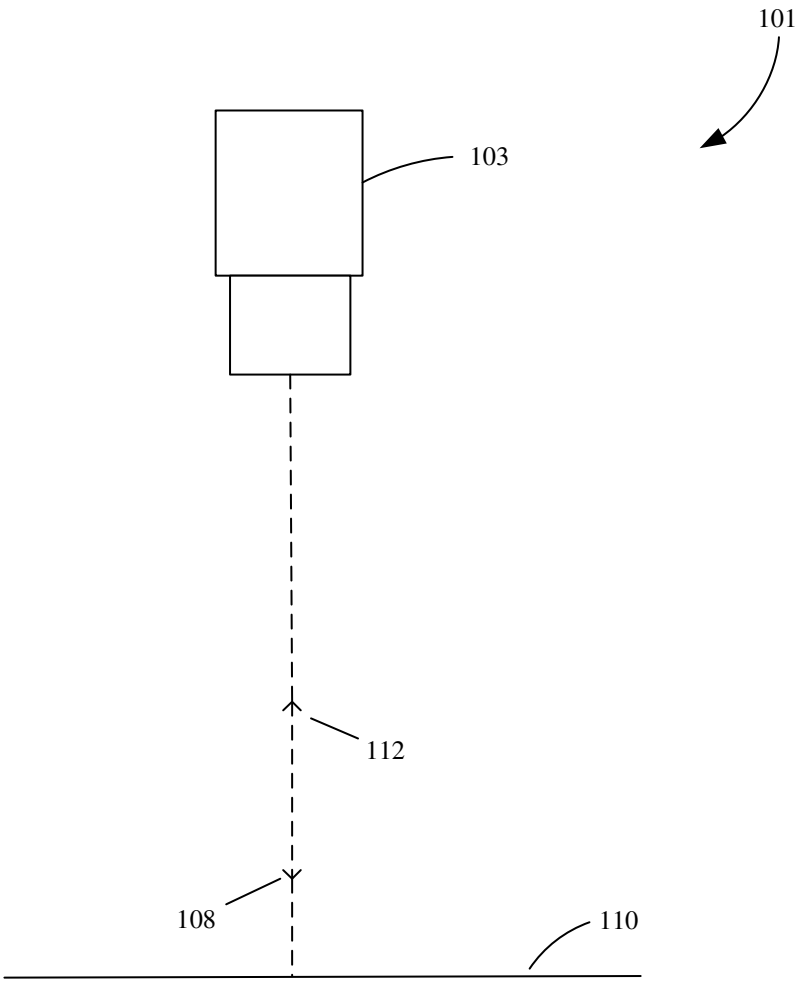

FIG. 3B

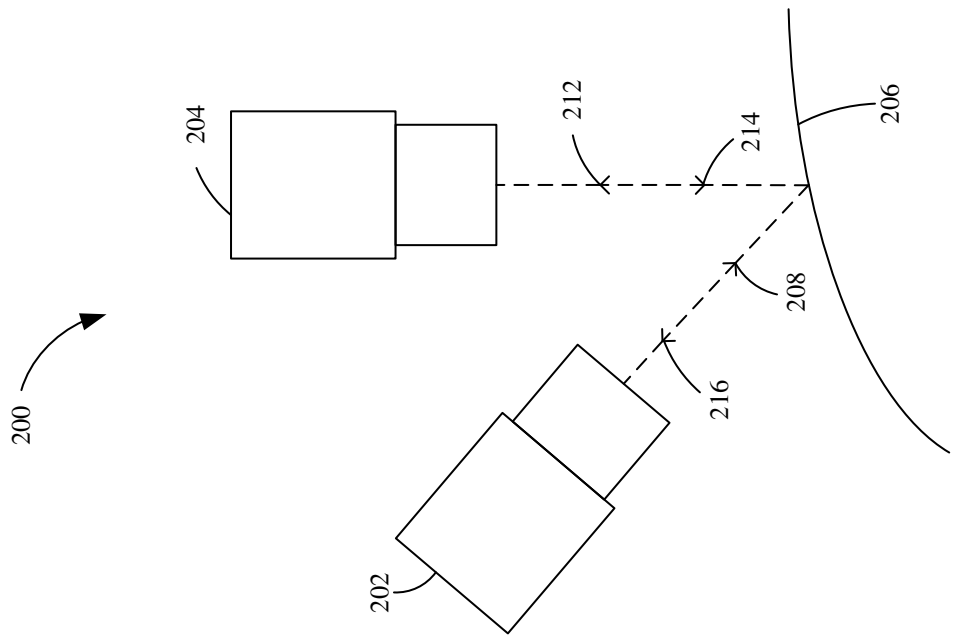

FIG. 4A

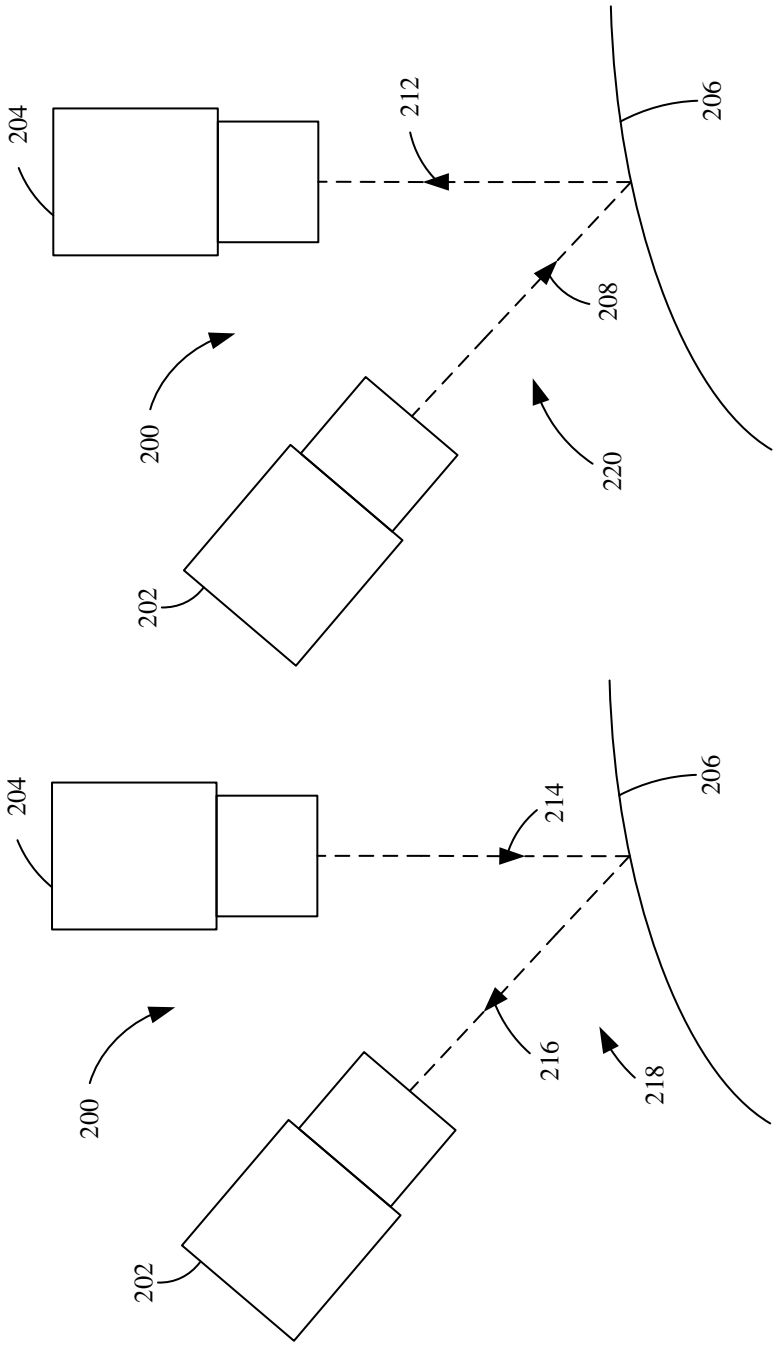

FIG. 4B

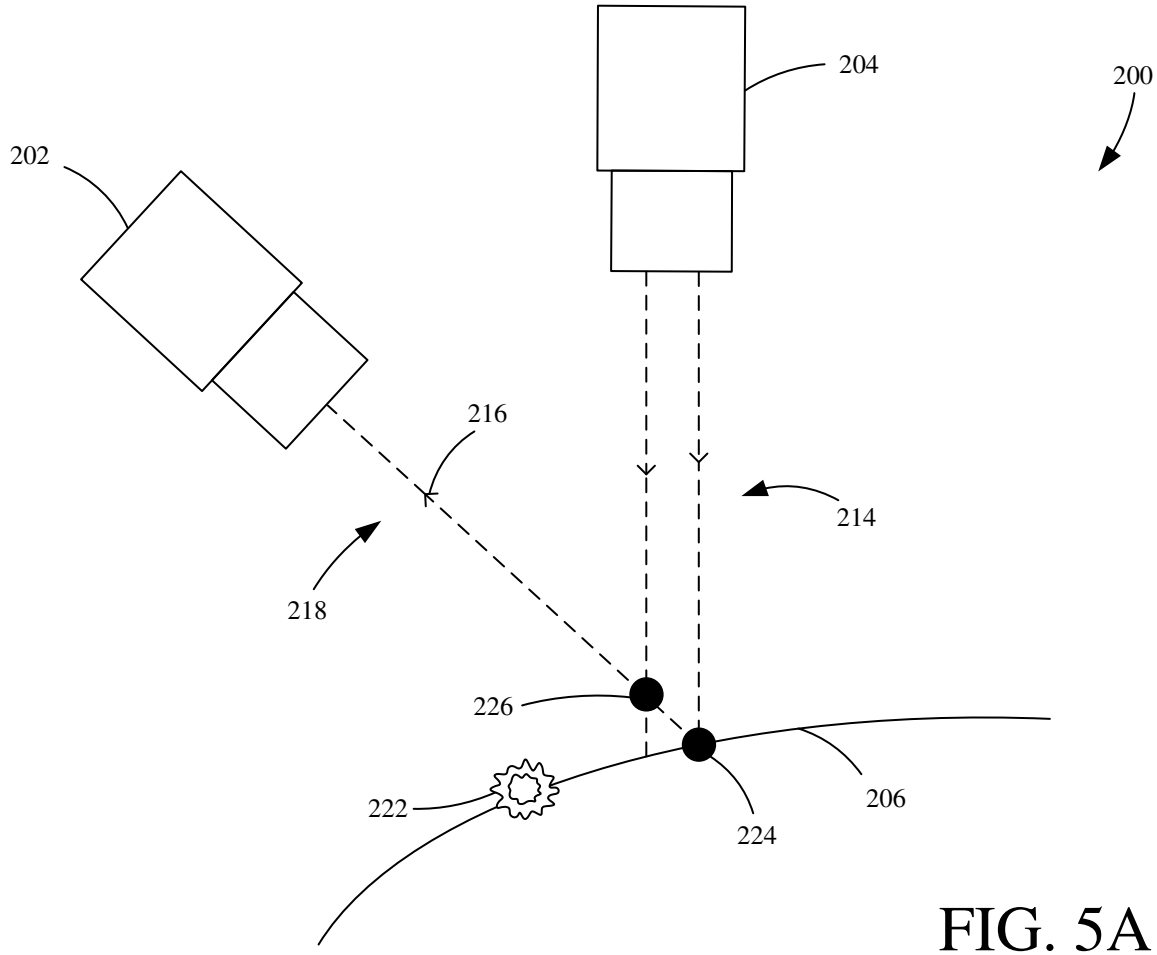
204
200
202
216
214
218
226
222
224
206

FIG. 5A

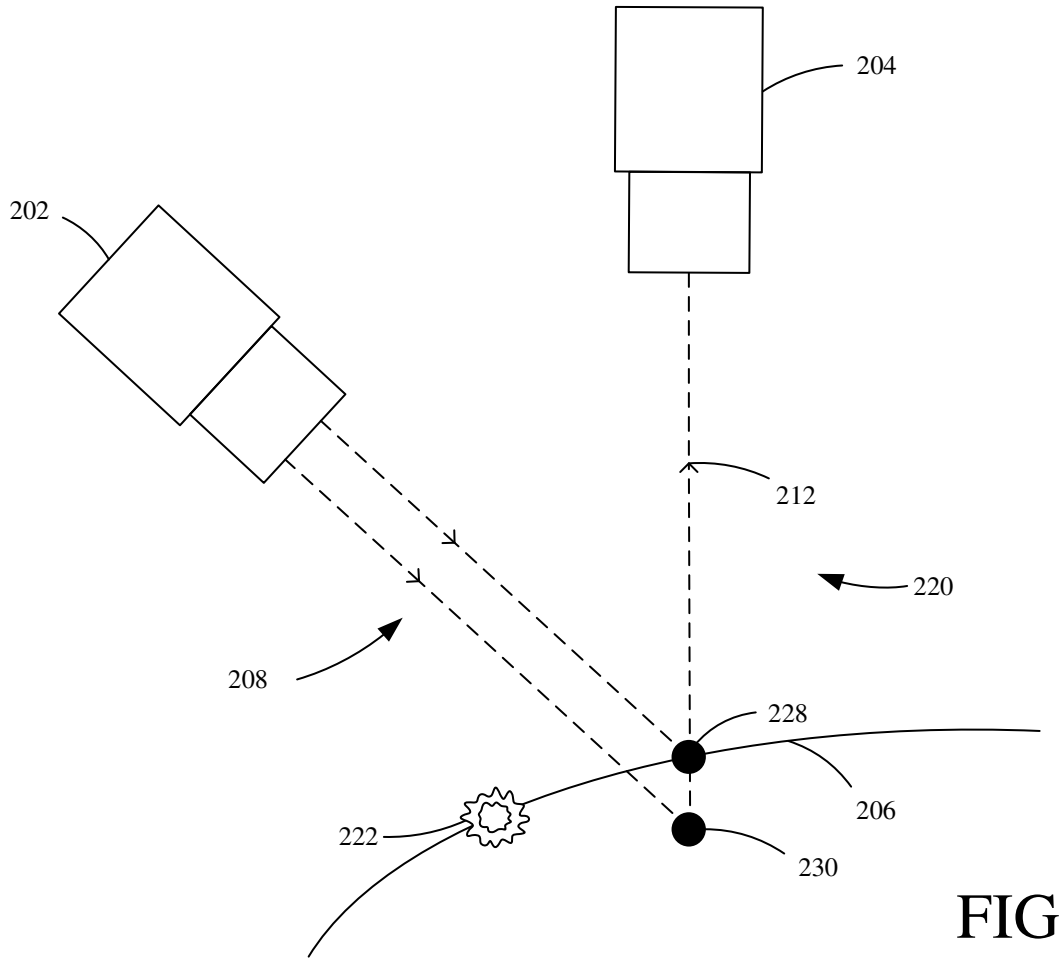
204
202
212
220
208
228
206
222
230

FIG. 5B

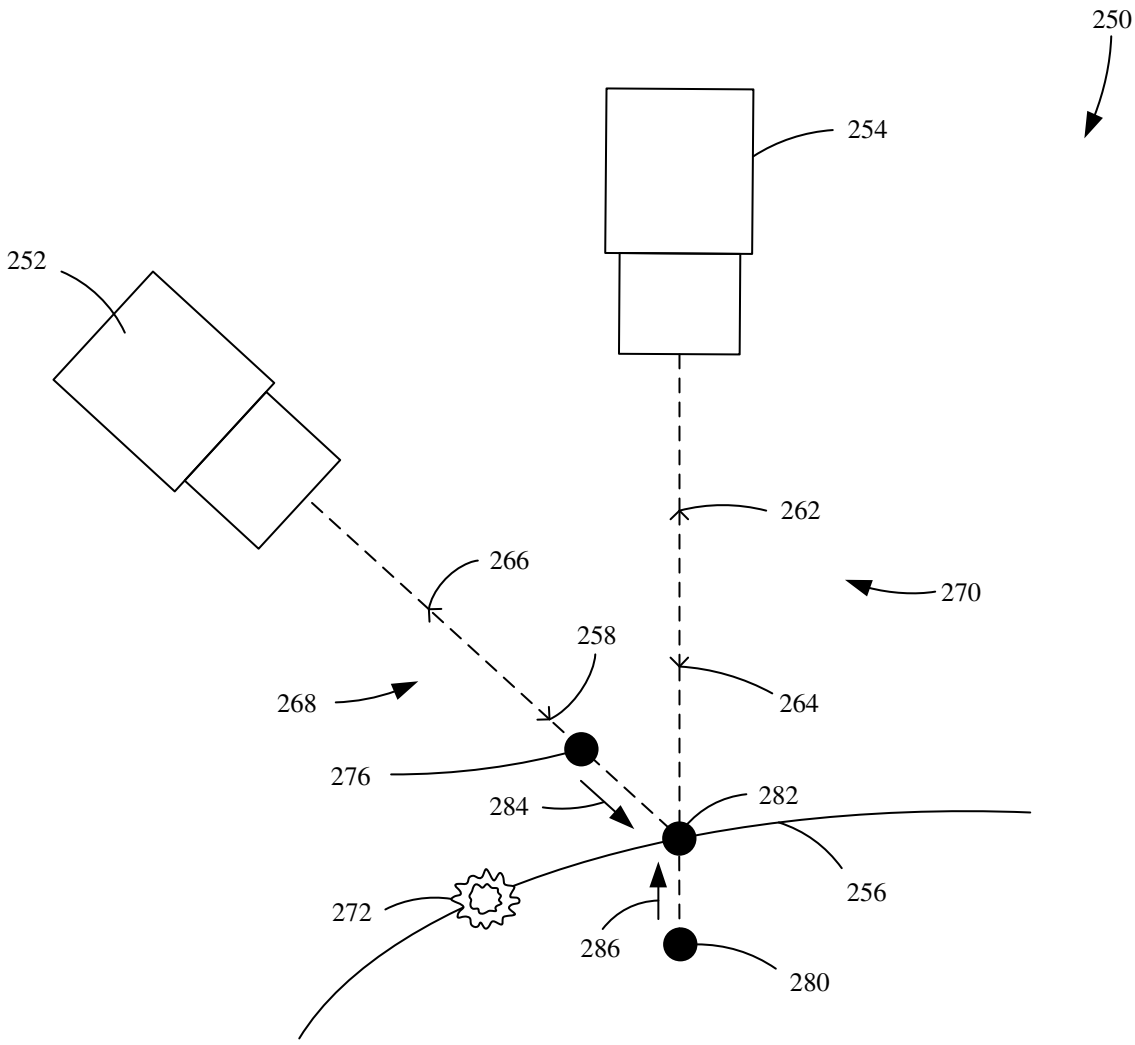

FIG. 6

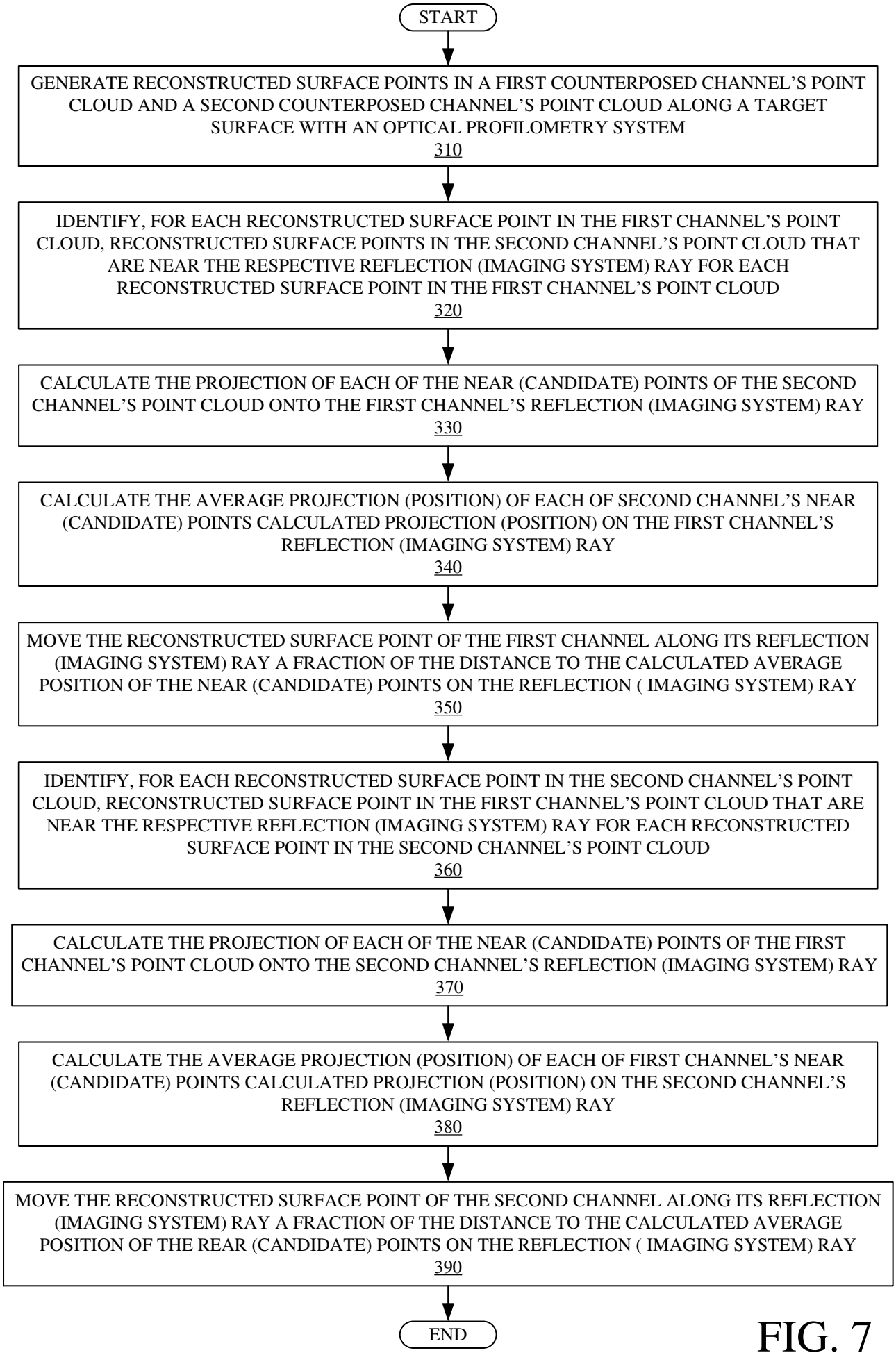
START
GENERATE RECONSTRUCTED SURFACE POINTS IN A FIRST COUNTERPOSED CHANNEL'S POINT CLOUD AND A SECOND COUNTERPOSED CHANNEL'S POINT CLOUD ALONG A TARGET SURFACE WITH AN OPTICAL PROFILOMETRY SYSTEM
310
IDENTIFY, FOR EACH RECONSTRUCTED SURFACE POINT IN THE FIRST CHANNEL'S POINT CLOUD, RECONSTRUCTED SURFACE POINTS IN THE SECOND CHANNEL'S POINT CLOUD THAT ARE NEAR THE RESPECTIVE REFLECTION (IMAGING SYSTEM) RAY FOR EACH RECONSTRUCTED SURFACE POINT IN THE FIRST CHANNEL'S POINT CLOUD
320
CALCULATE THE PROJECTION OF EACH OF THE NEAR (CANDIDATE) POINTS OF THE SECOND CHANNEL'S POINT CLOUD ONTO THE FIRST CHANNEL'S REFLECTION (IMAGING SYSTEM) RAY
330
CALCULATE THE AVERAGE PROJECTION (POSITION) OF EACH OF SECOND CHANNEL'S NEAR (CANDIDATE) POINTS CALCULATED PROJECTION (POSITION) ON THE FIRST CHANNEL'S REFLECTION (IMAGING SYSTEM) RAY
340
MOVE THE RECONSTRUCTED SURFACE POINT OF THE FIRST CHANNEL ALONG ITS REFLECTION (IMAGING SYSTEM) RAY A FRACTION OF THE DISTANCE TO THE CALCULATED AVERAGE POSITION OF THE NEAR (CANDIDATE) POINTS ON THE REFLECTION (IMAGING SYSTEM) RAY
350
IDENTIFY, FOR EACH RECONSTRUCTED SURFACE POINT IN THE SECOND CHANNEL'S POINT CLOUD, RECONSTRUCTED SURFACE POINT IN THE FIRST CHANNEL'S POINT CLOUD THAT ARE NEAR THE RESPECTIVE REFLECTION (IMAGING SYSTEM) RAY FOR EACH RECONSTRUCTED SURFACE POINT IN THE SECOND CHANNEL'S POINT CLOUD
360
CALCULATE THE PROJECTION OF EACH OF THE NEAR (CANDIDATE) POINTS OF THE FIRST CHANNEL'S POINT CLOUD ONTO THE SECOND CHANNEL'S REFLECTION (IMAGING SYSTEM) RAY
370
CALCULATE THE AVERAGE PROJECTION (POSITION) OF EACH OF FIRST CHANNEL'S NEAR (CANDIDATE) POINTS CALCULATED PROJECTION (POSITION) ON THE SECOND CHANNEL'S REFLECTION (IMAGING SYSTEM) RAY
380
MOVE THE RECONSTRUCTED SURFACE POINT OF THE SECOND CHANNEL ALONG ITS REFLECTION (IMAGING SYSTEM) RAY A FRACTION OF THE DISTANCE TO THE CALCULATED AVERAGE POSITION OF THE REAR (CANDIDATE) POINTS ON THE REFLECTION (IMAGING SYSTEM) RAY
390
END

FIG. 7

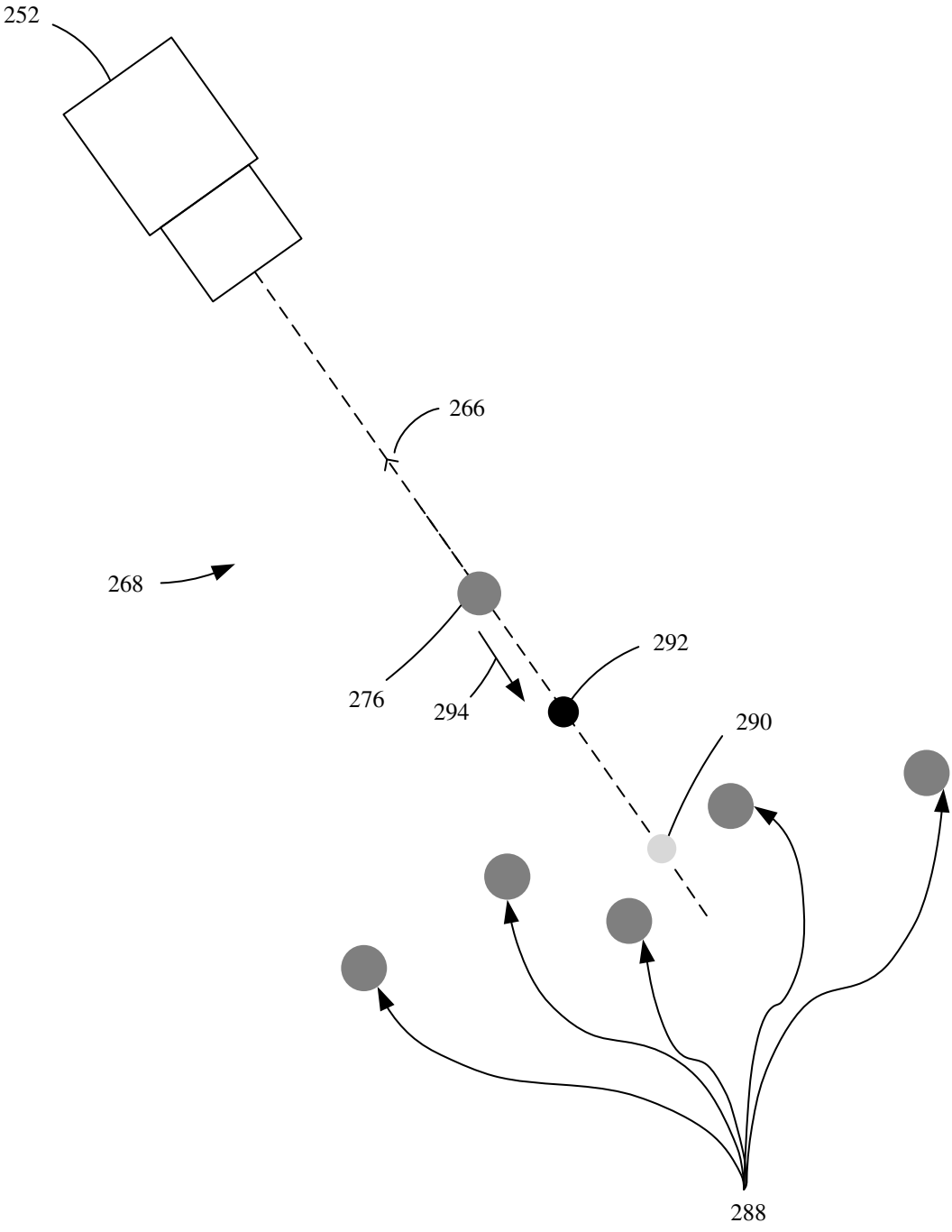

FIG. 8

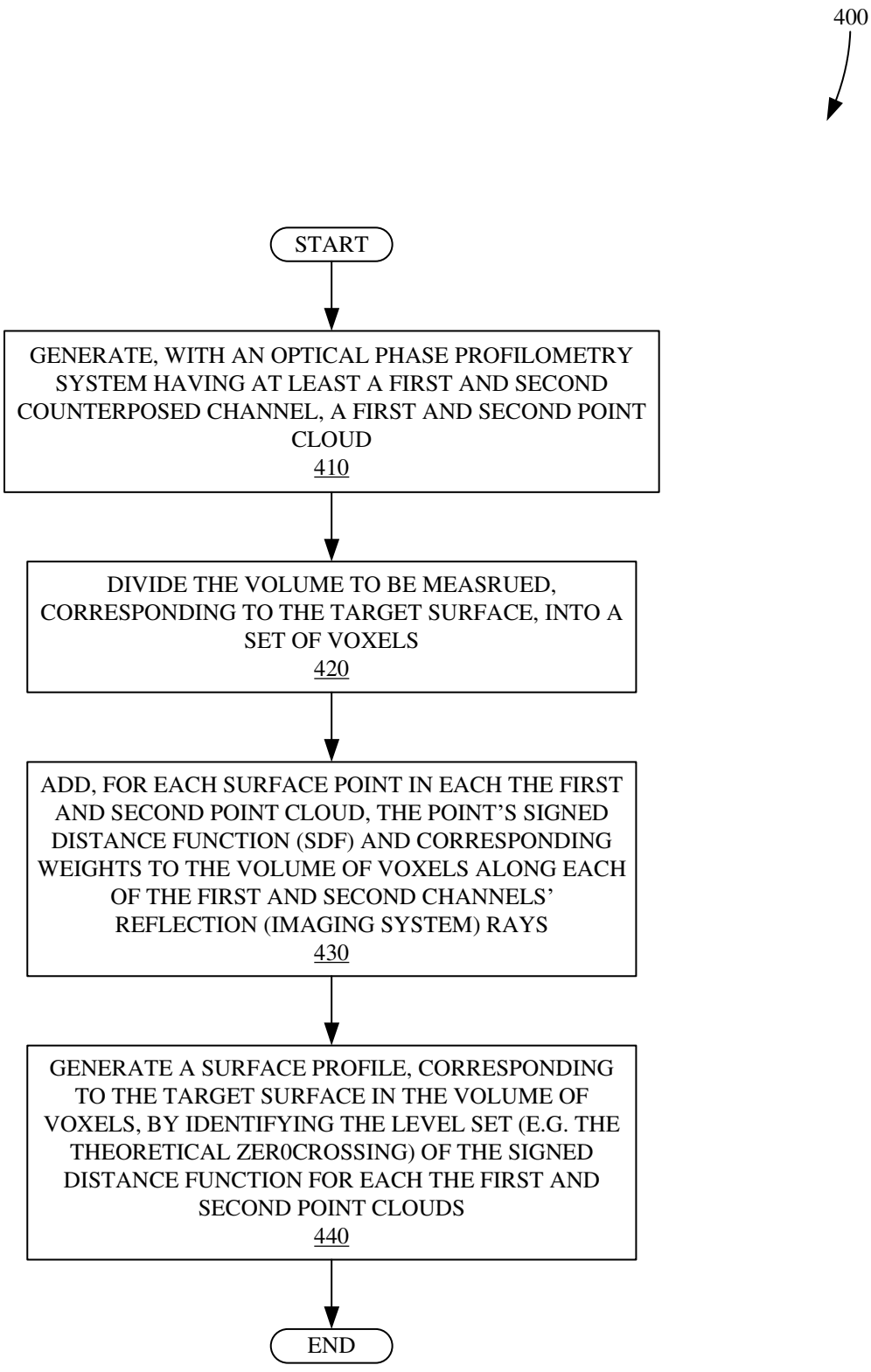
400
START
GENERATE, WITH AN OPTICAL PHASE PROFILOMETRY SYSTEM HAVING AT LEAST A FIRST AND SECOND COUNTERPOSED CHANNEL, A FIRST AND SECOND POINT CLOUD
410
DIVIDE THE VOLUME TO BE MEASRUED, CORRESPONDING TO THE TARGET SURFACE, INTO A SET OF VOXELS
420
ADD, FOR EACH SURFACE POINT IN EACH THE FIRST AND SECOND POINT CLOUD, THE POINT'S SIGNED DISTANCE FUNCTION (SDF) AND CORRESPONDING WEIGHTS TO THE VOLUME OF VOXELS ALONG EACH OF THE FIRST AND SECOND CHANNELS' REFLECTION (IMAGING SYSTEM) RAYS
430
GENERATE A SURFACE PROFILE, CORRESPONDING TO THE TARGET SURFACE IN THE VOLUME OF VOXELS, BY IDENTIFYING THE LEVEL SET (E.G. THE THEORETICAL ZER0CROSSING) OF THE SIGNED DISTANCE FUNCTION FOR EACH THE FIRST AND SECOND POINT CLOUDS
440
END

FIG. 9

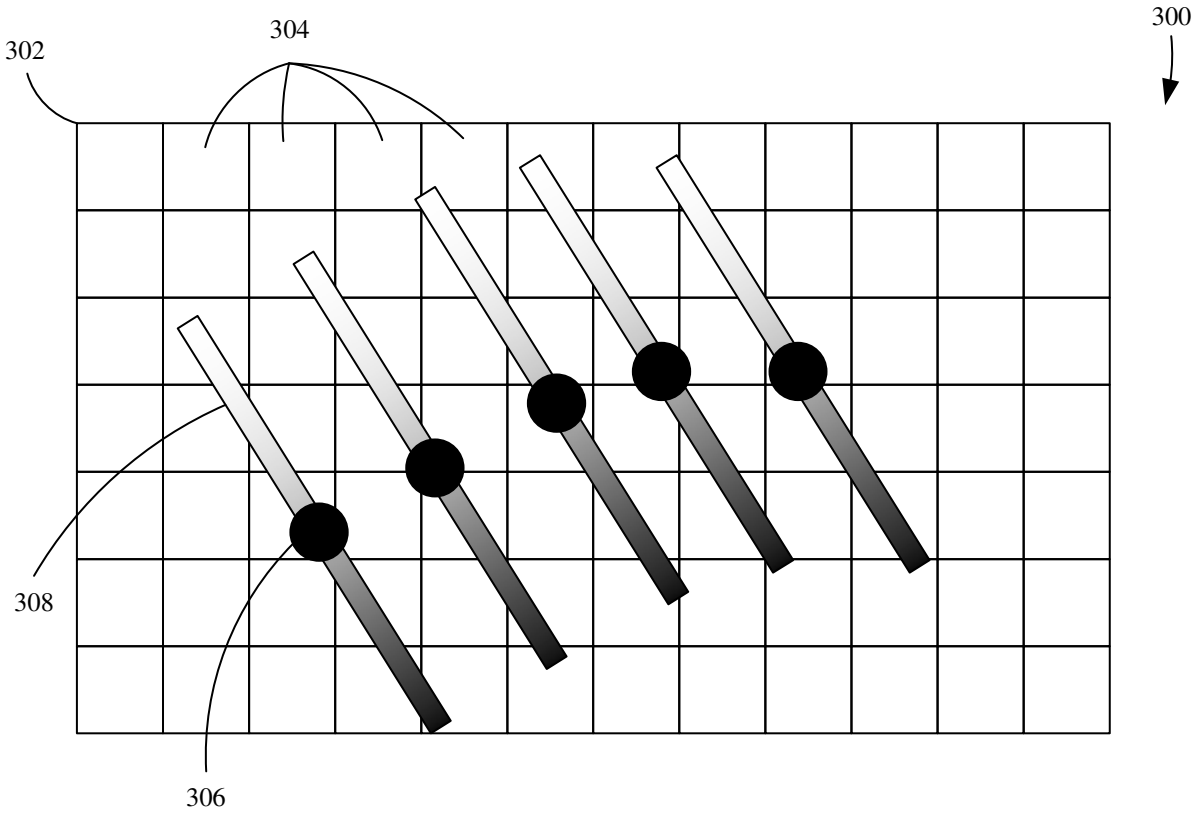

FIG. 10A

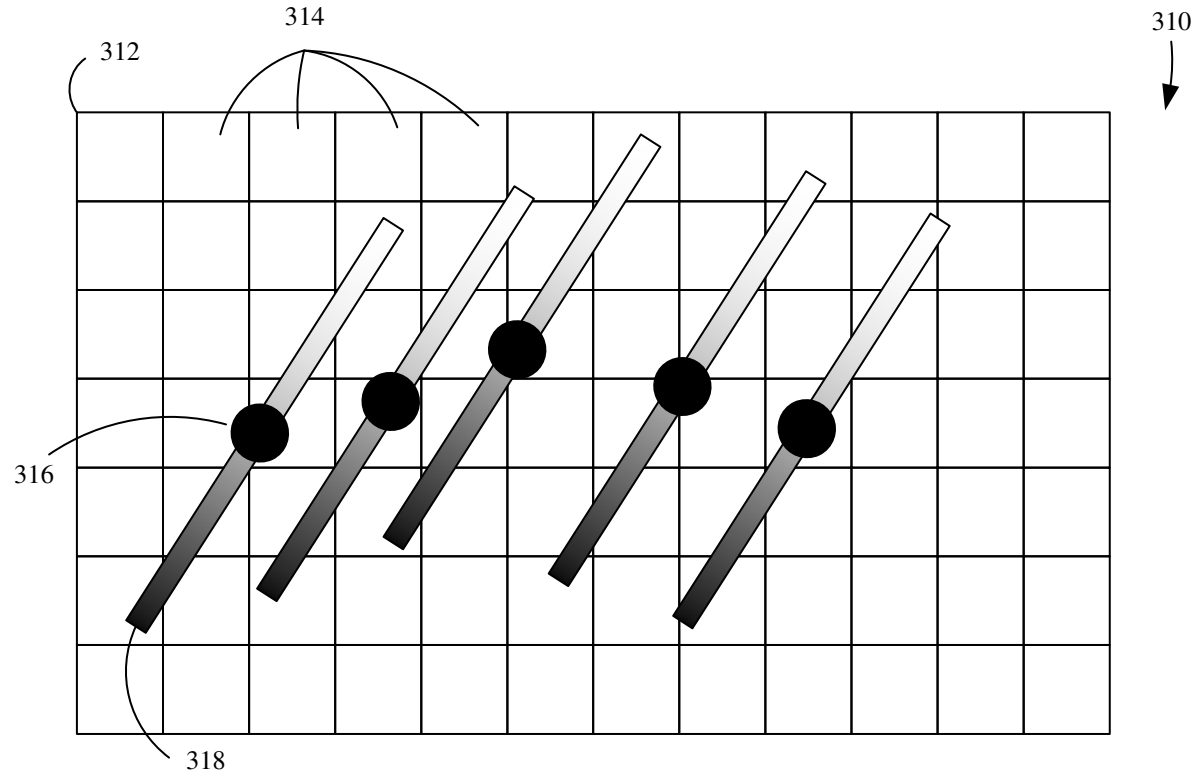

FIG. 10B

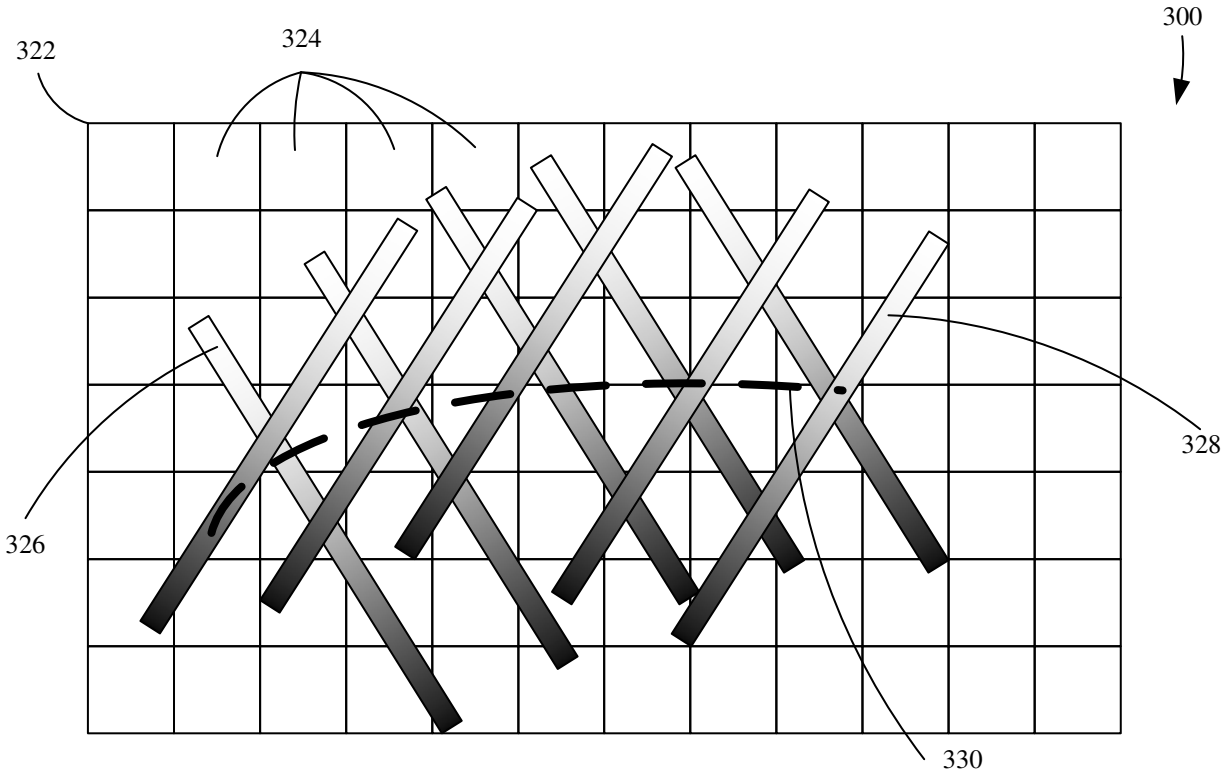

FIG. 10C

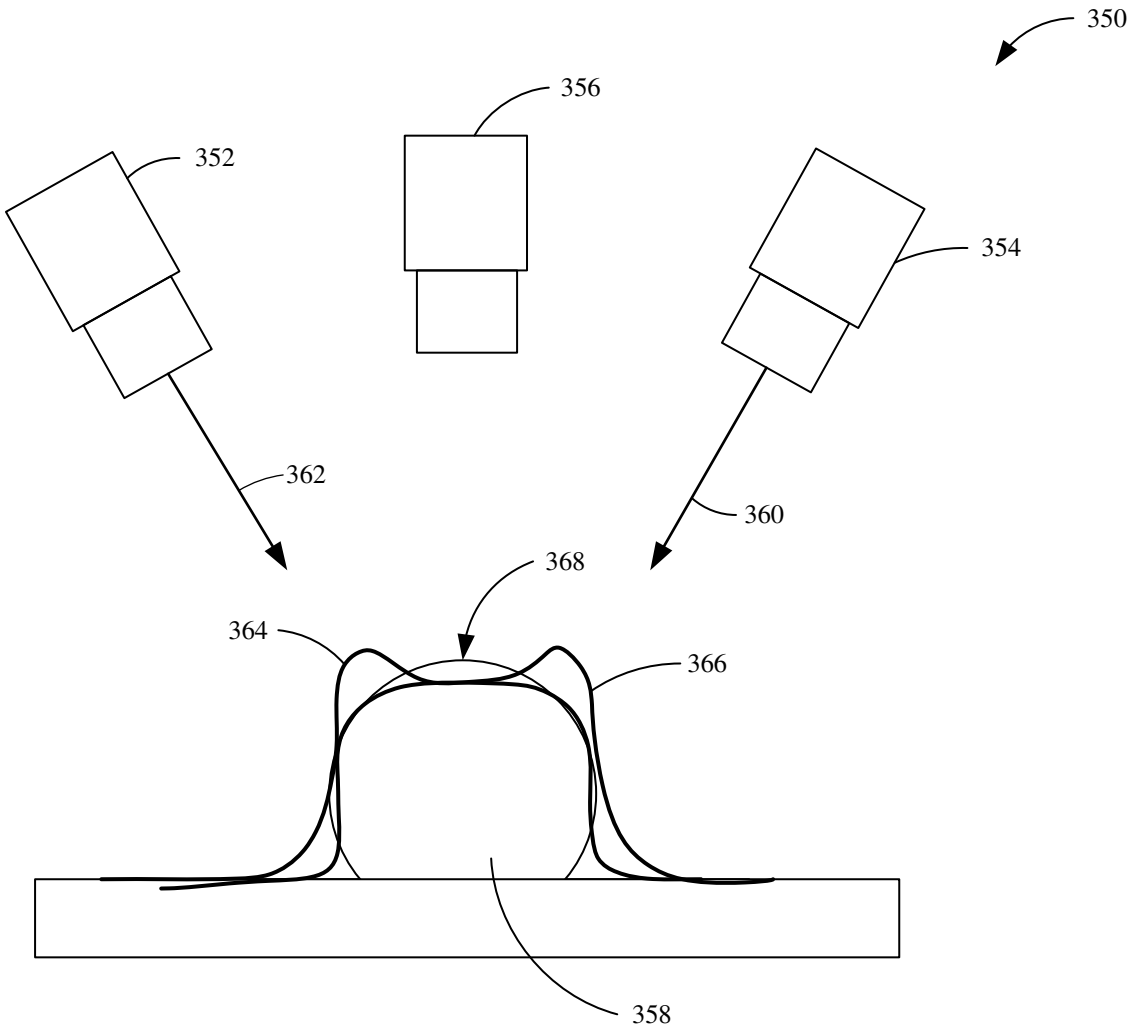

FIG. 11A

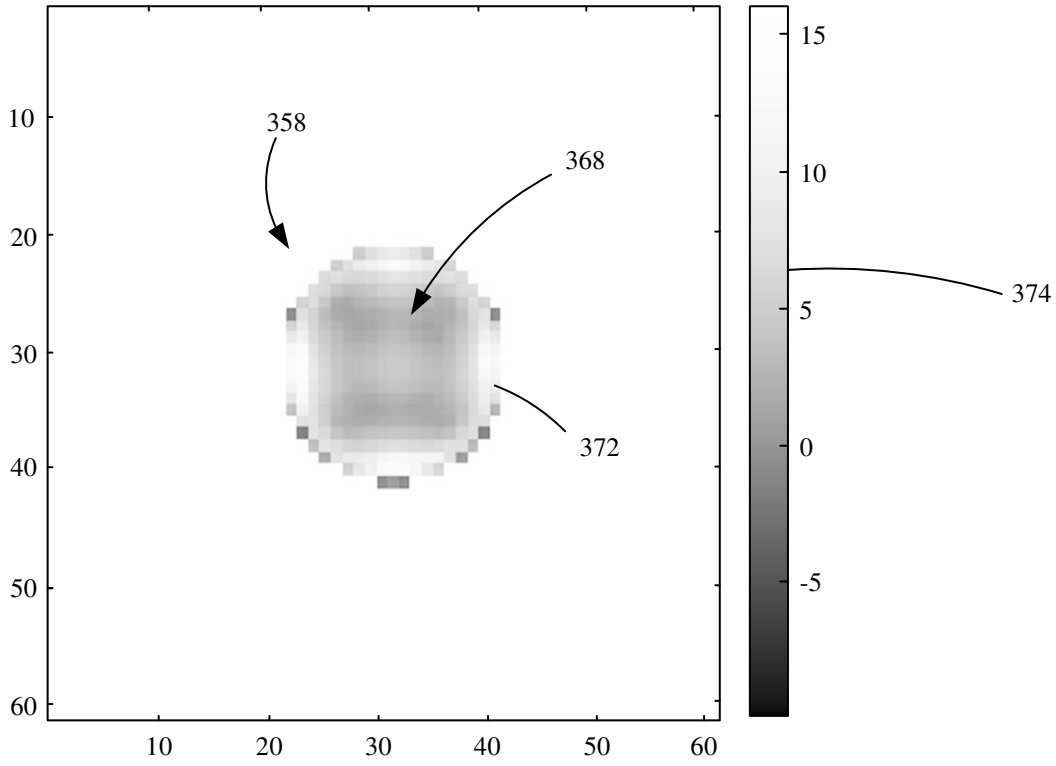

FIG. 11B

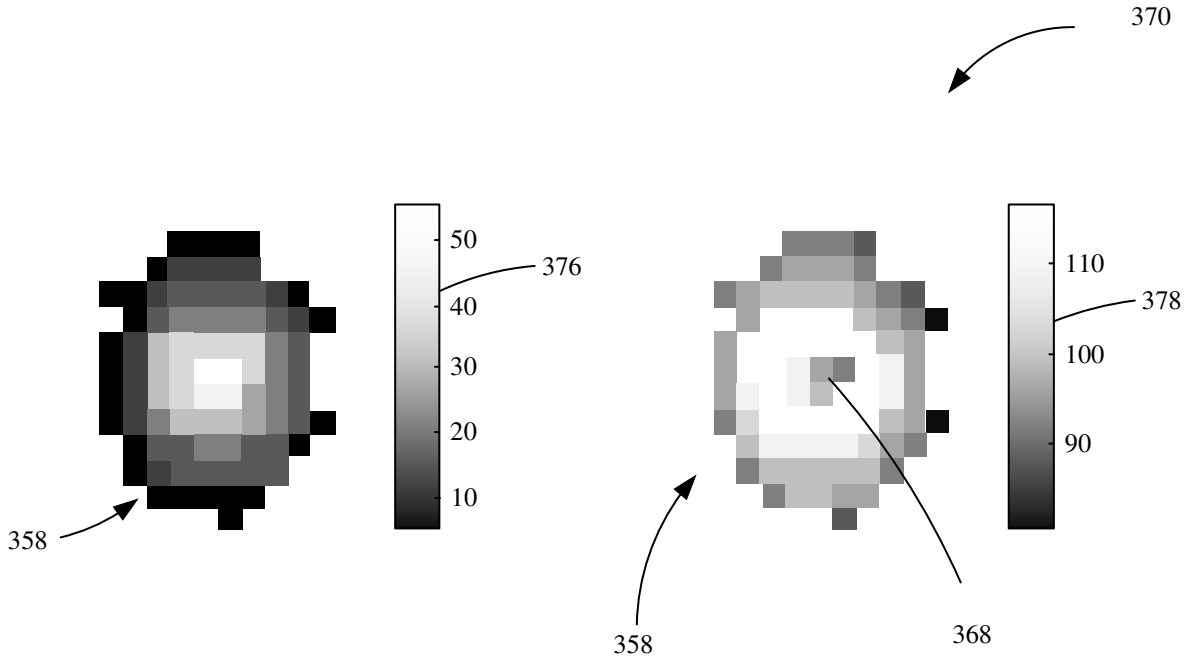

FIG. 11C

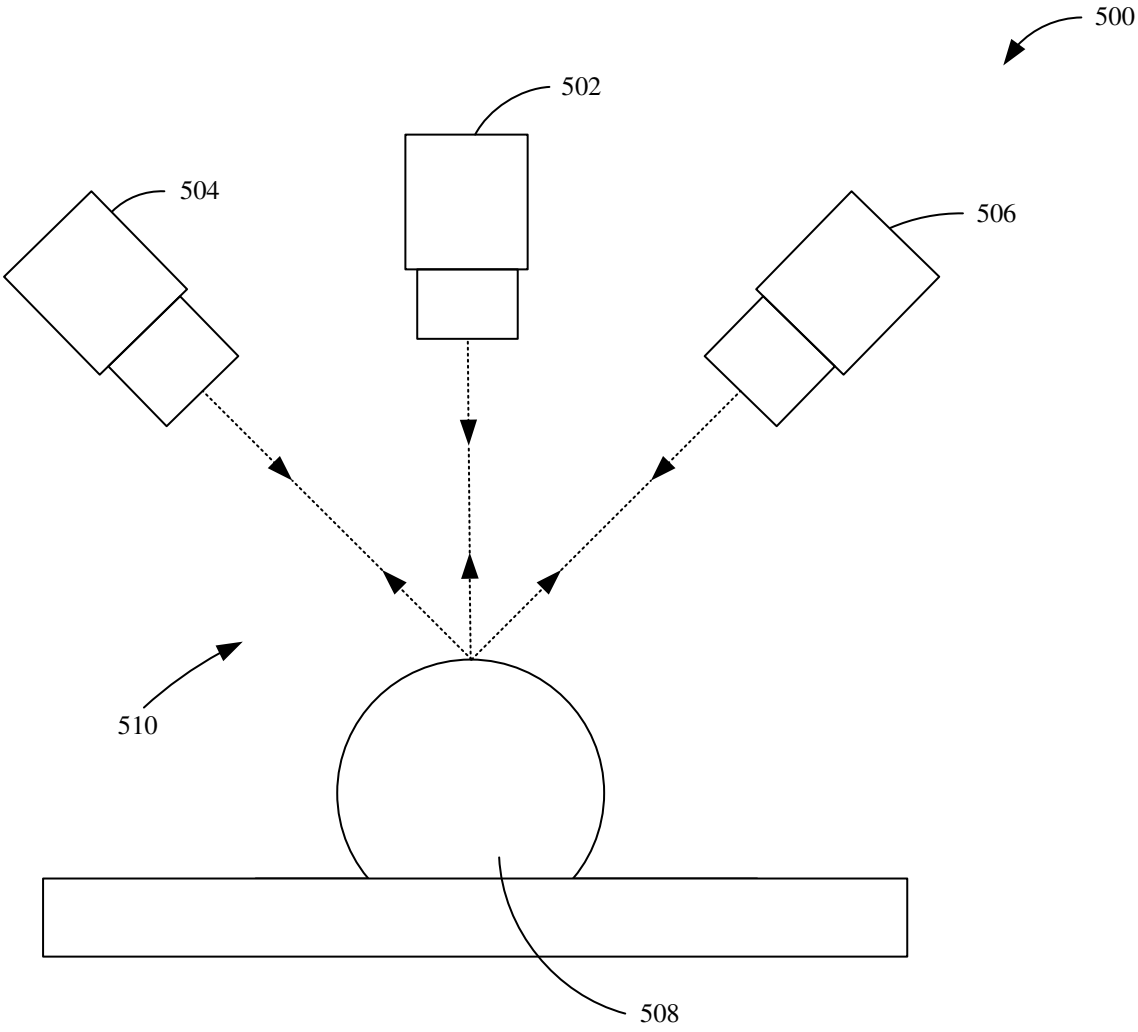

FIG. 12

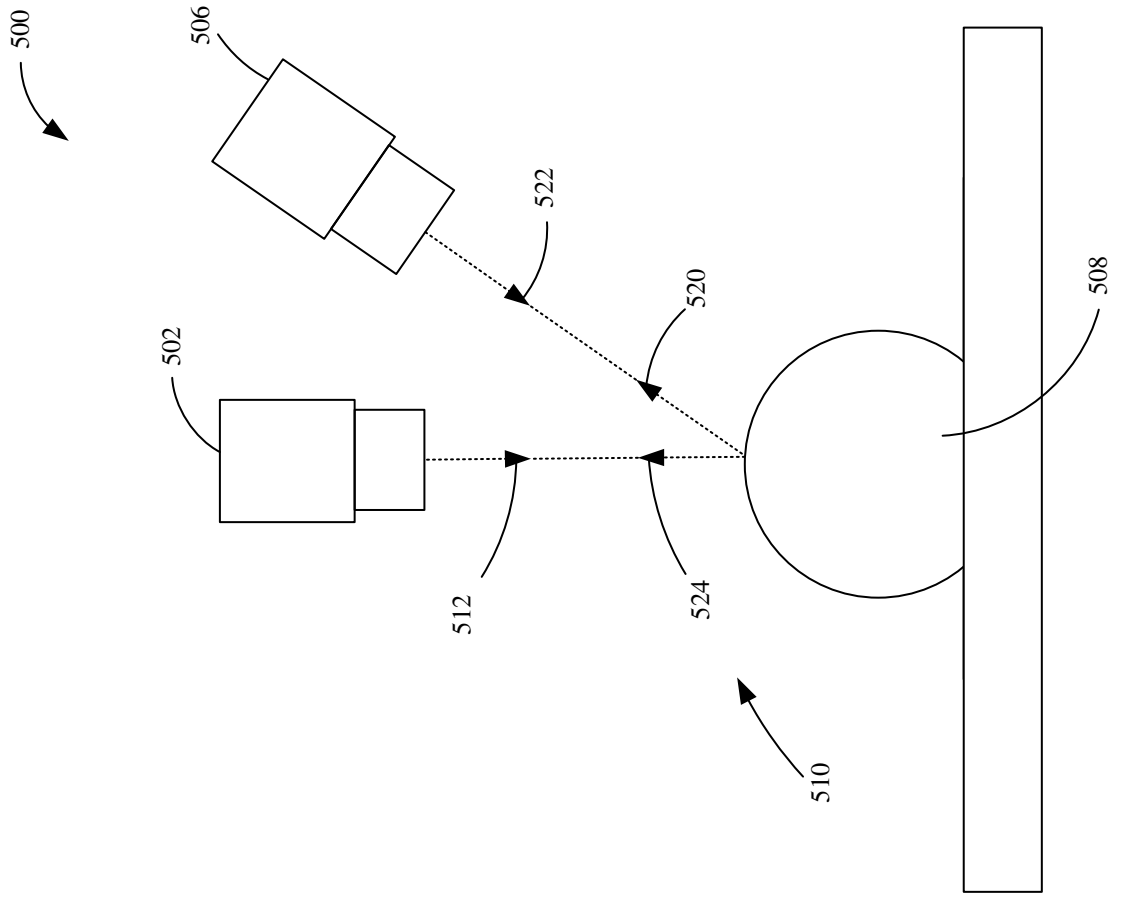

FIG. 13B

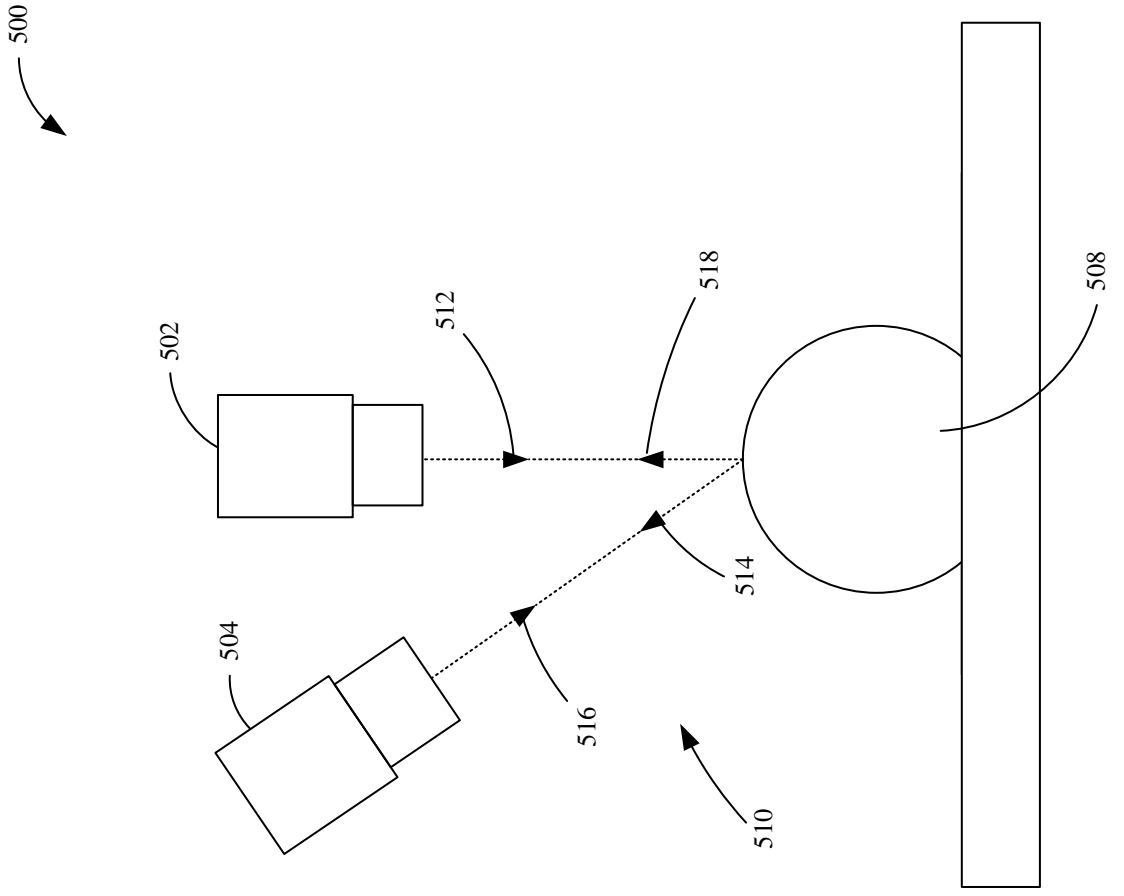

FIG. 13A

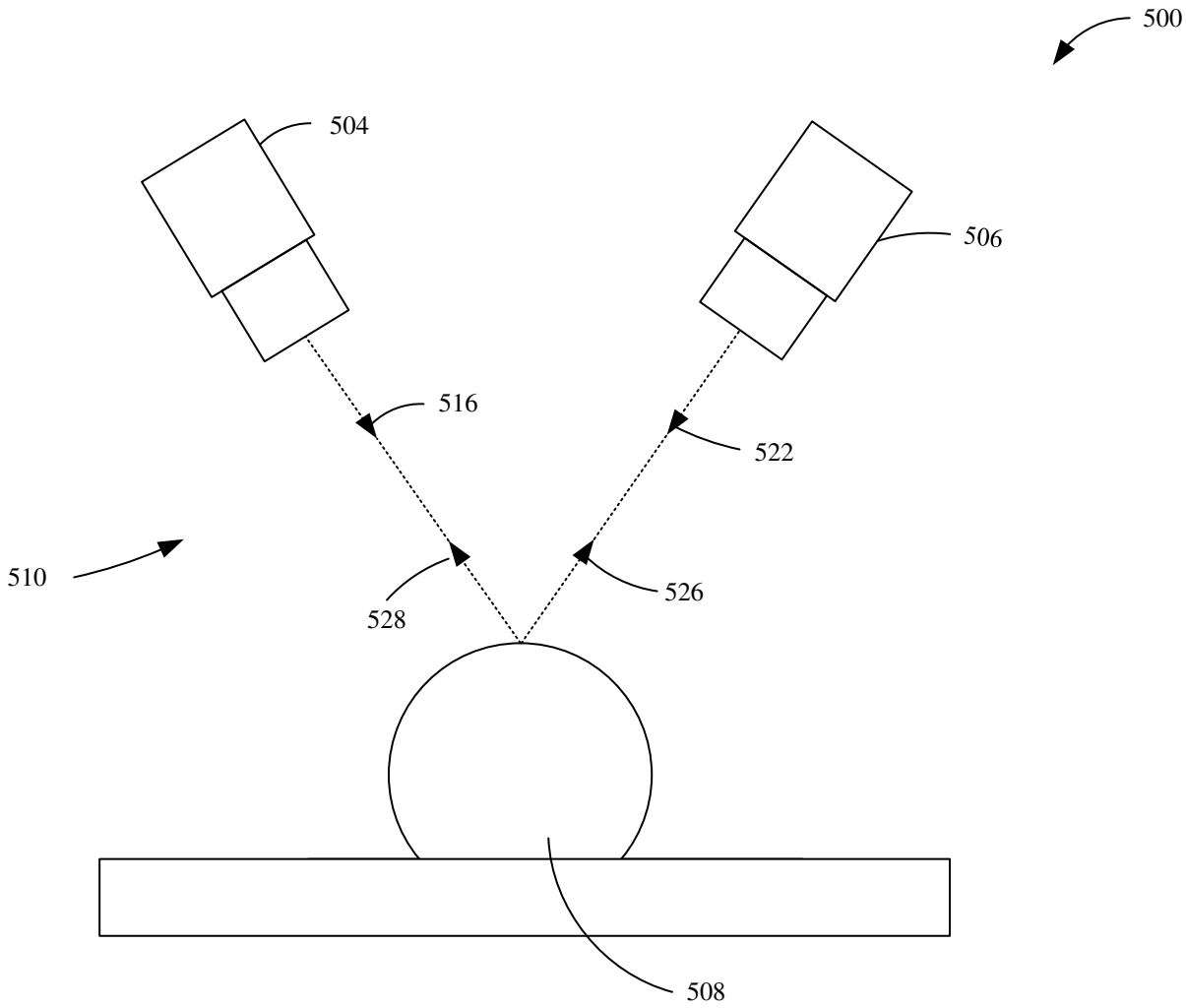

FIG. 13C

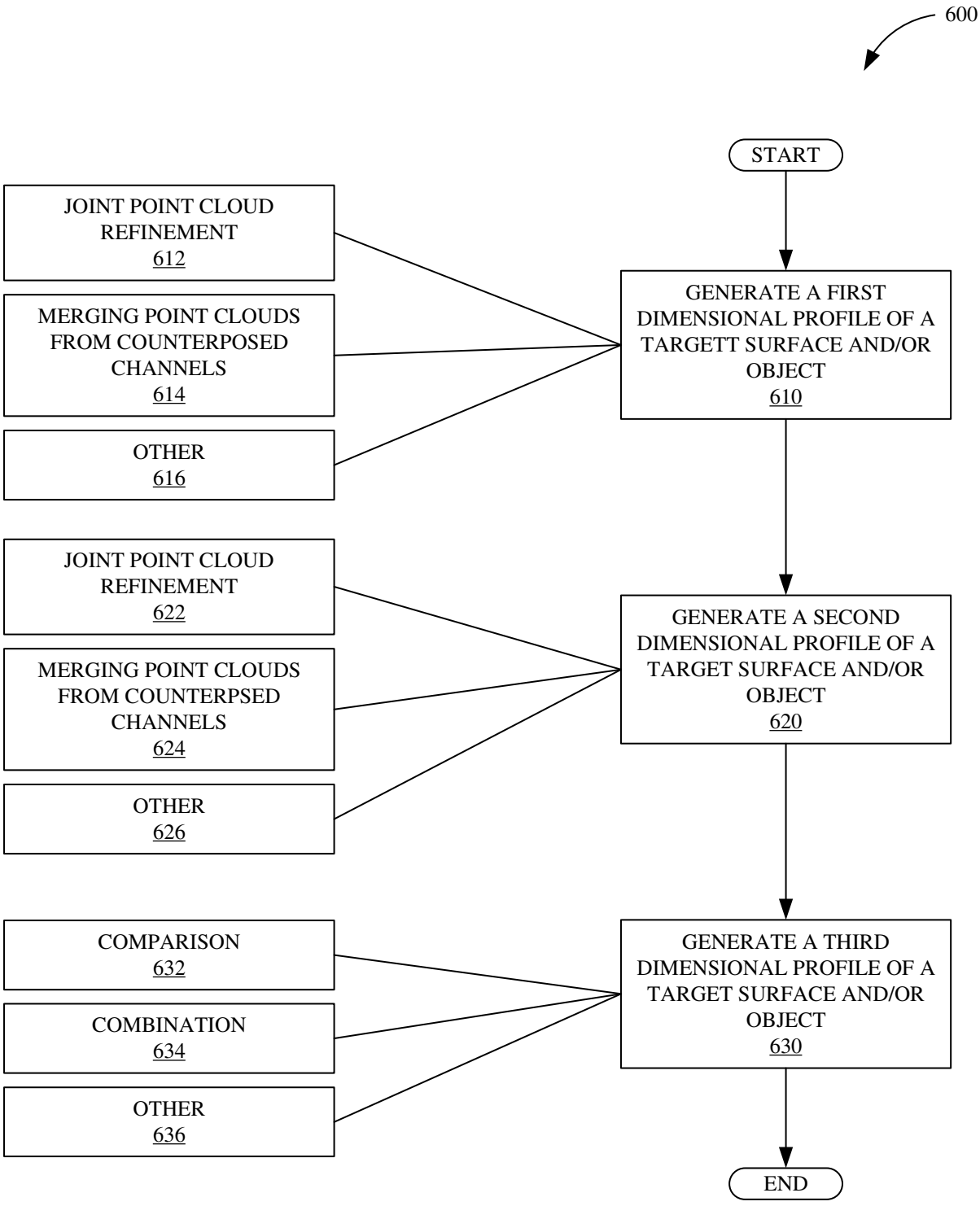
600
START
JOINT POINT CLOUD REFINEMENT 612
MERGING POINT CLOUDS FROM COUNTERPOSED CHANNELS 614
OTHER 616
GENERATE A FIRST DIMENSIONAL PROFILE OF A TARGETT SURFACE AND/OR OBJECT 610
JOINT POINT CLOUD REFINEMENT 622
MERGING POINT CLOUDS FROM COUNTERPSED CHANNELS 624
OTHER 626
GENERATE A SECOND DIMENSIONAL PROFILE OF A TARGET SURFACE AND/OR OBJECT 620
COMPARISON 632
COMBINATION 634
OTHER 636
GENERATE A THIRD DIMENSIONAL PROFILE OF A TARGET SURFACE AND/OR OBJECT 630
END

FIG. 14

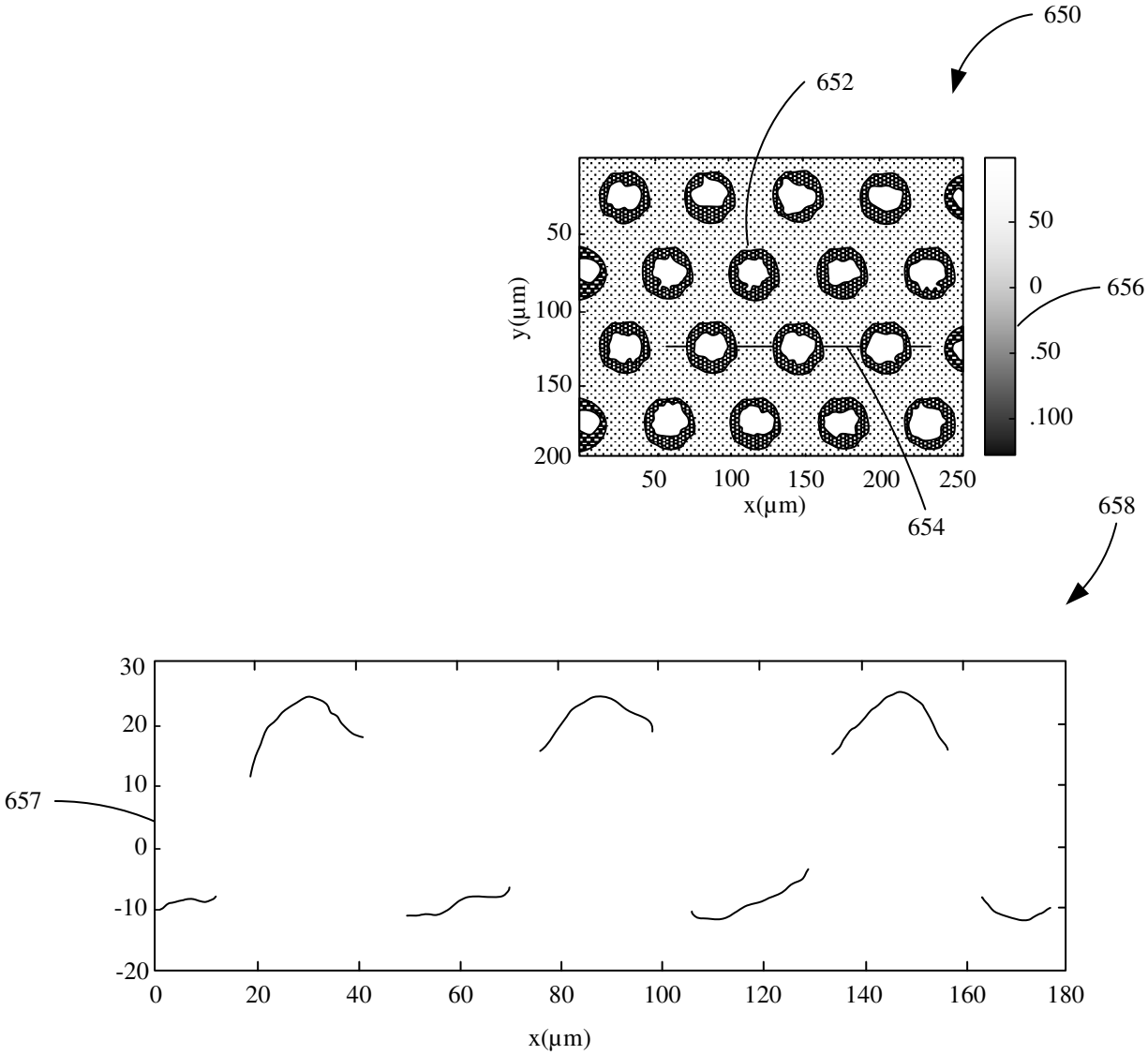
650
652
50
100
150
200
y(µm)
50
100
150
200
250
x(µm)
50
0
.50
.100
656
654
658
657
30
20
10
0
-10
-20
0
20
40
60
80
100
120
140
160
180
x(µm)

FIG. 15A

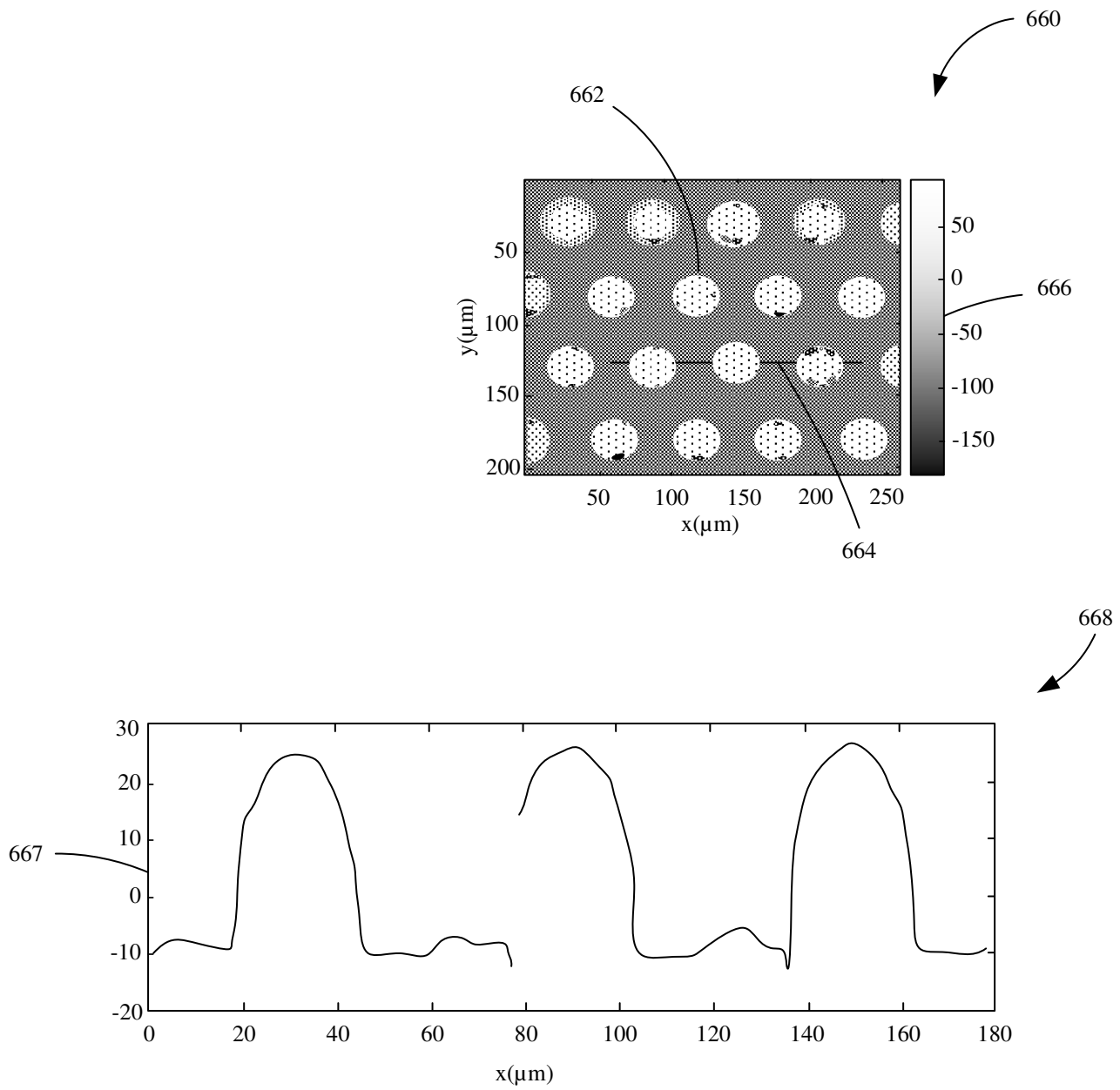
660
662
50
100
150
200
y(µm)
50
100
150
200
250
x(µm)
50
0
-50
-100
-150
666
664
668
667
30
20
10
0
-10
-20
0
20
40
60
80
100
120
140
160
180
x(µm)

FIG. 15B

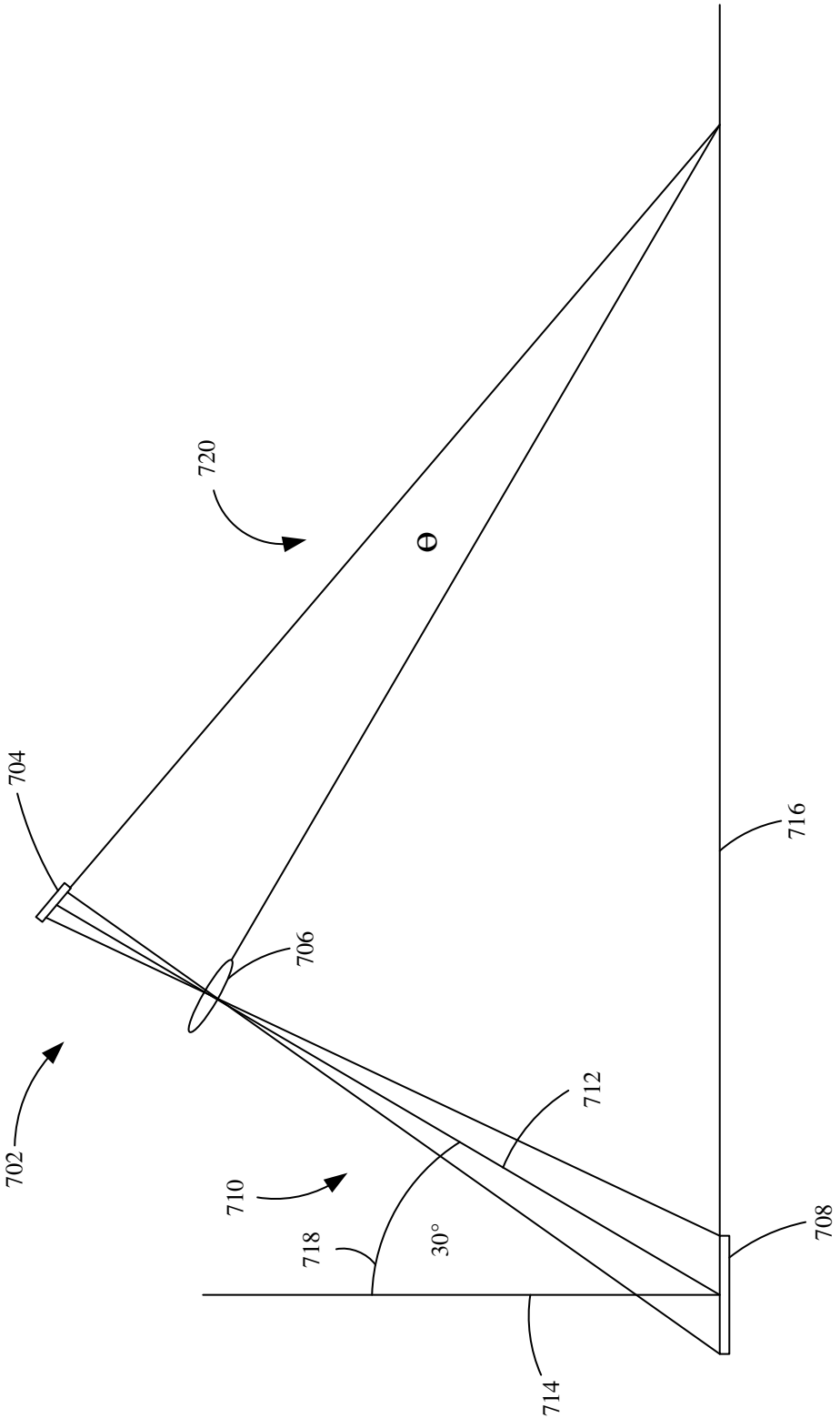

FIG. 16

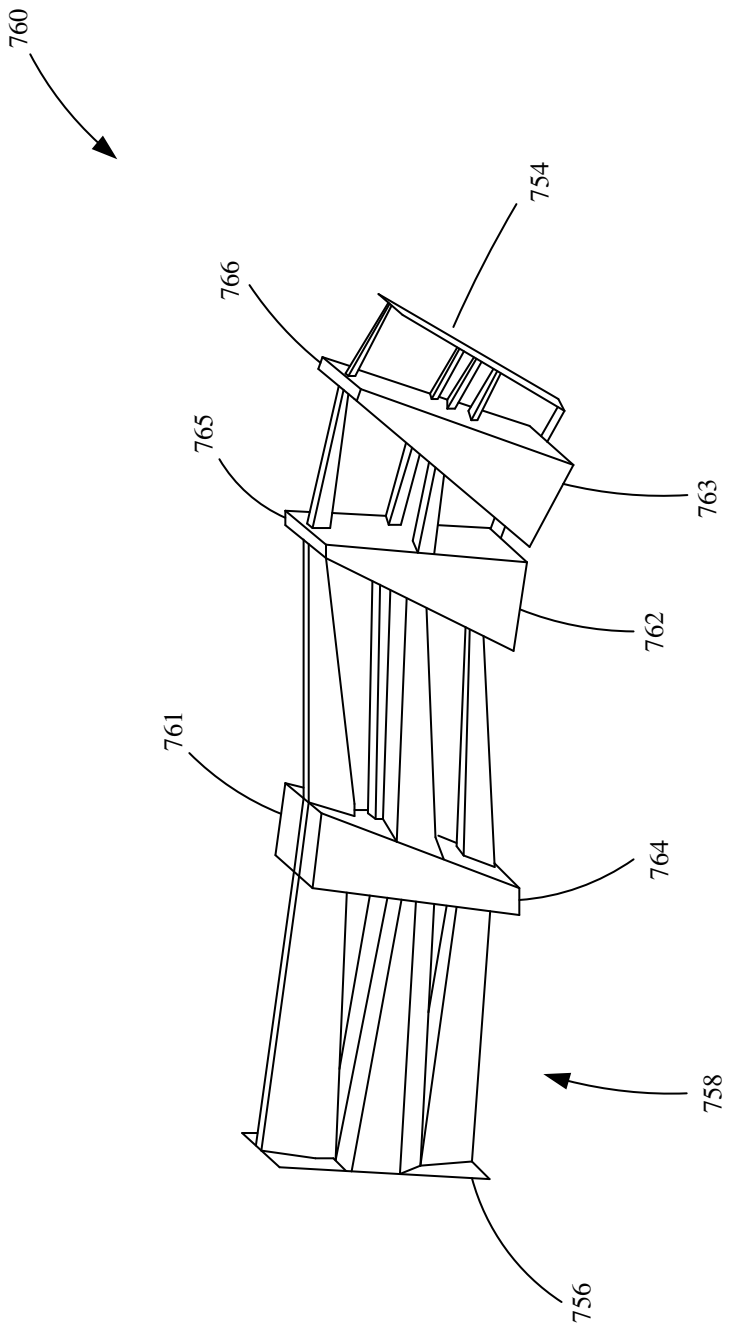

FIG. 17

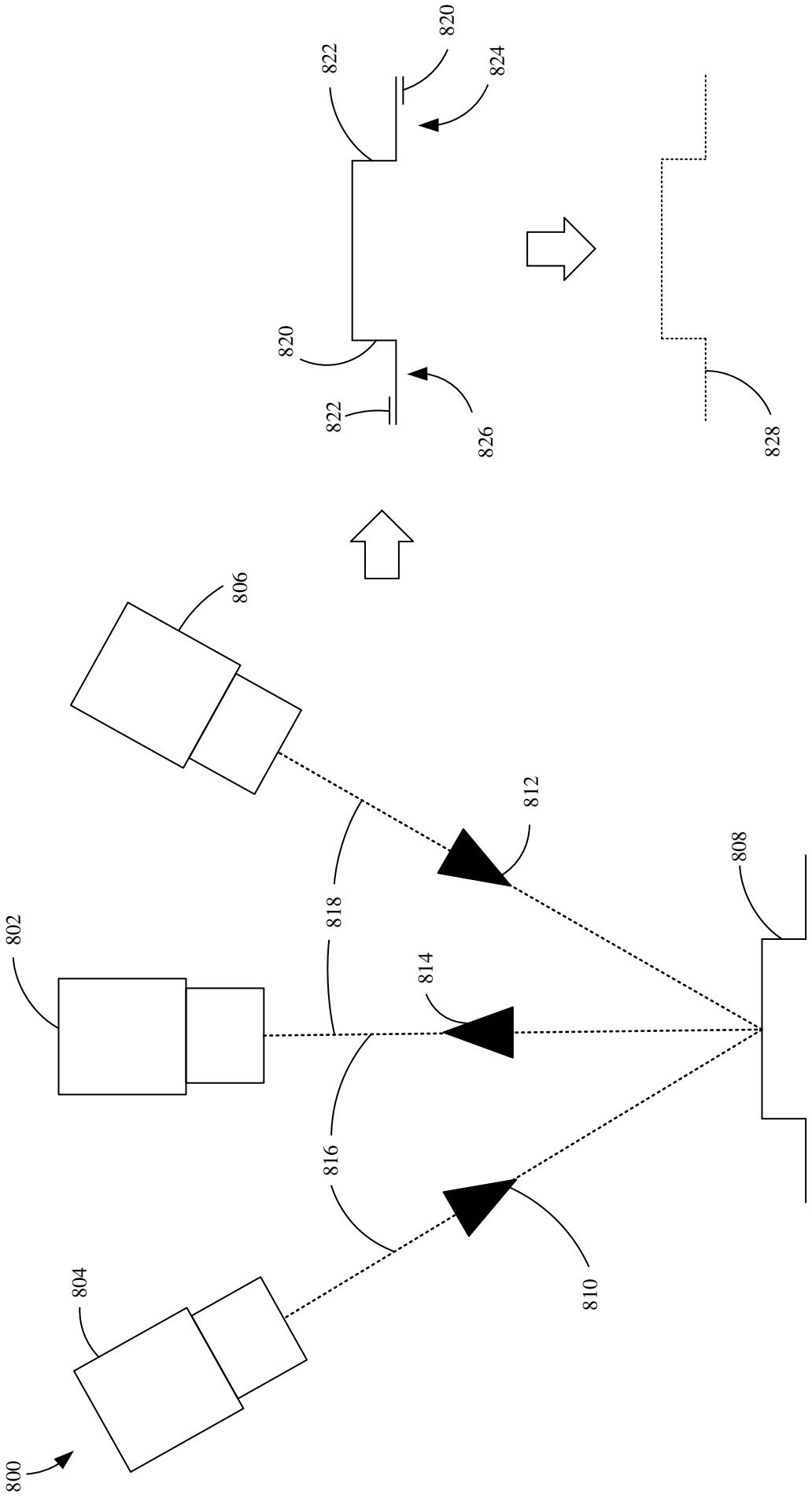

FIG. 18A

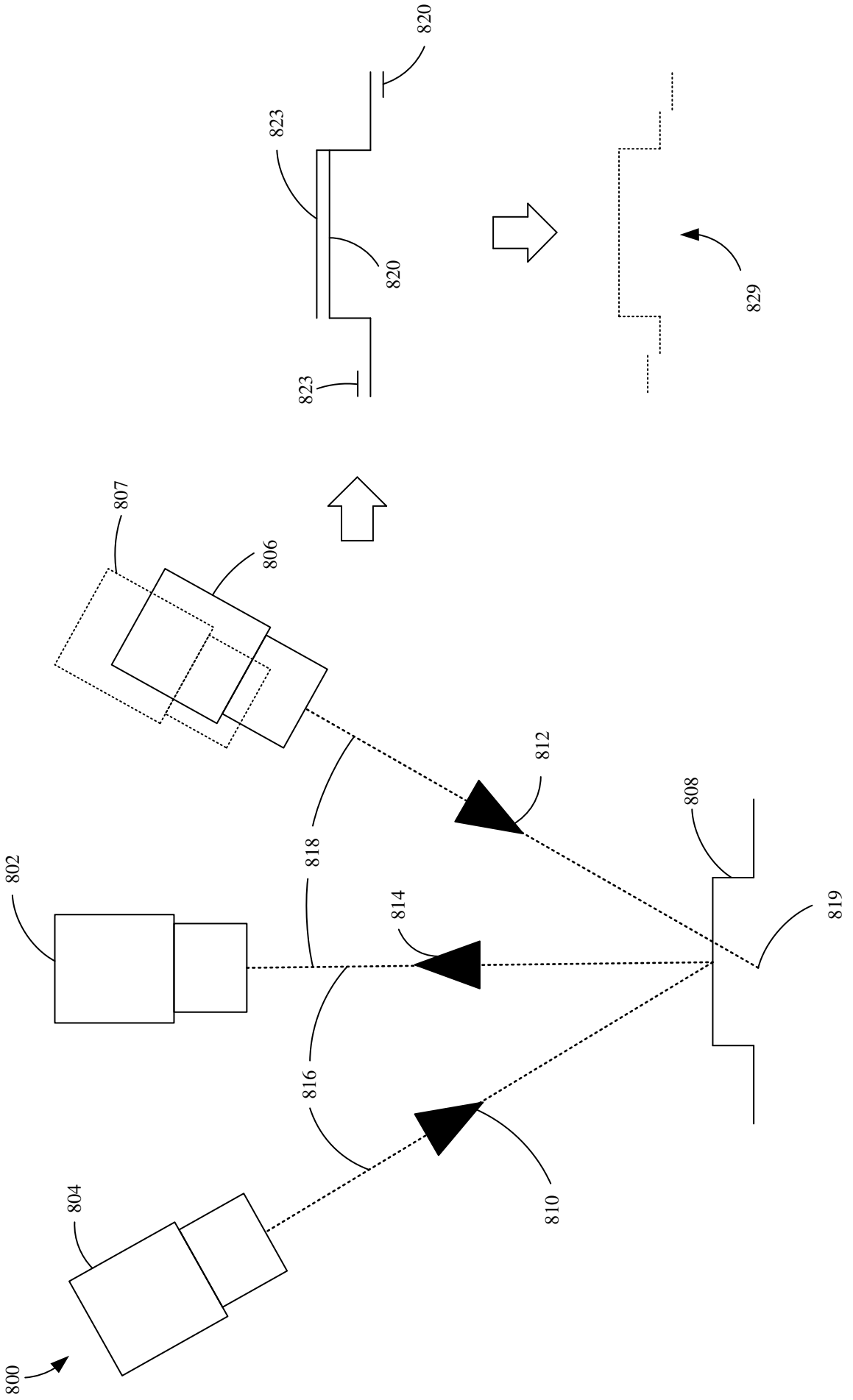
800
802
804
806
807
808
810
812
814
816
818
819
820
820
823
823
829

FIG. 18B

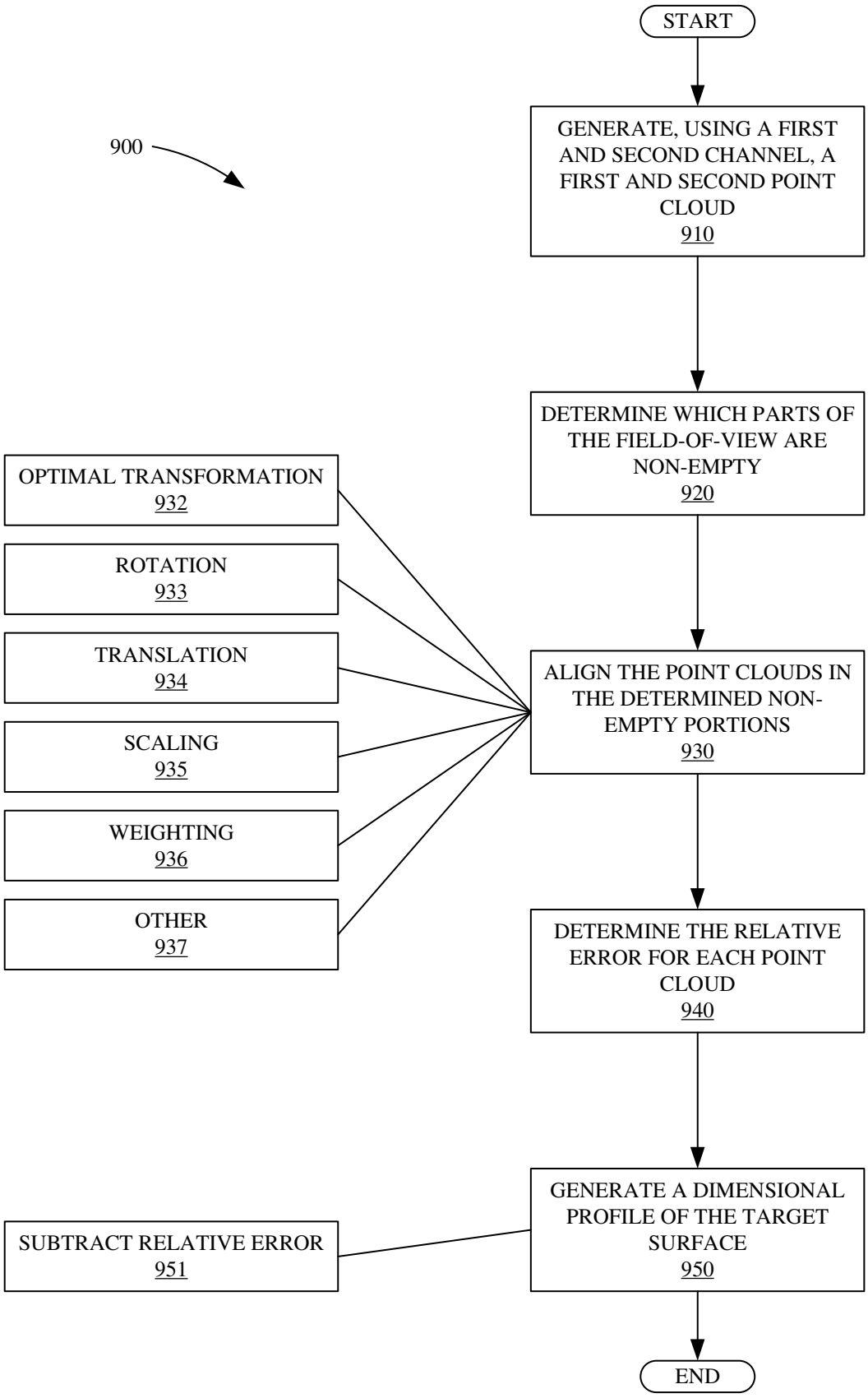
900
START
GENERATE, USING A FIRST AND SECOND CHANNEL, A FIRST AND SECOND POINT CLOUD
910
DETERMINE WHICH PARTS OF THE FIELD-OF-VIEW ARE NON-EMPTY
920
ALIGN THE POINT CLOUDS IN THE DETERMINED NON-EMPTY PORTIONS
930
OPTIMAL TRANSFORMATION
932
ROTATION
933
TRANSLATION
934
SCALING
935
WEIGHTING
936
OTHER
937
DETERMINE THE RELATIVE ERROR FOR EACH POINT CLOUD
940
GENERATE A DIMENSIONAL PROFILE OF THE TARGET SURFACE
950
SUBTRACT RELATIVE ERROR
951
END

FIG. 19

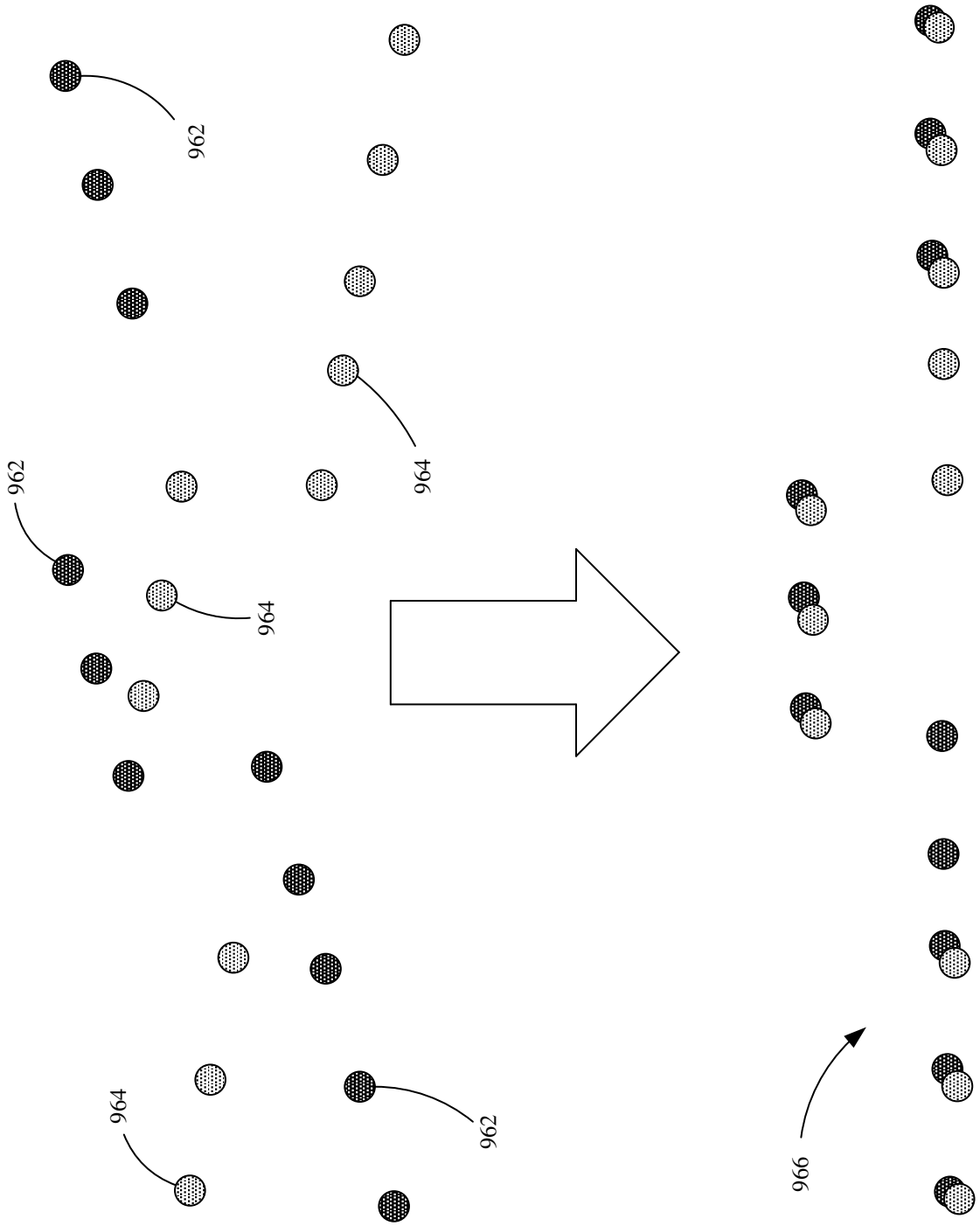

FIG. 20

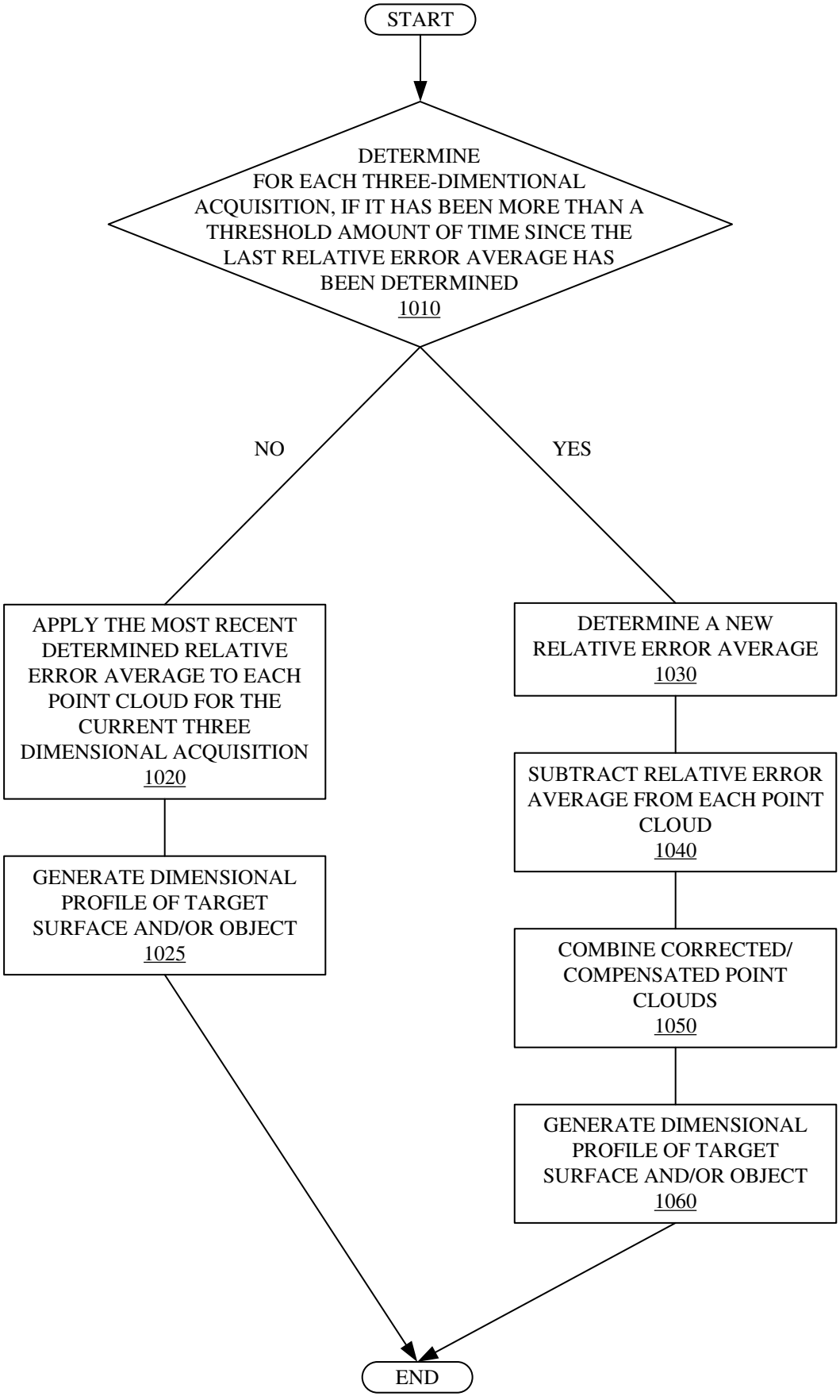
START
DETERMINE FOR EACH THREE-DIMENTIONAL ACQUISITION, IF IT HAS BEEN MORE THAN A THRESHOLD AMOUNT OF TIME SINCE THE LAST RELATIVE ERROR AVERAGE HAS BEEN DETERMINED
1010
NO
YES
APPLY THE MOST RECENT DETERMINED RELATIVE ERROR AVERAGE TO EACH POINT CLOUD FOR THE CURRENT THREE DIMENSIONAL ACQUISITION
1020
GENERATE DIMENSIONAL PROFILE OF TARGET SURFACE AND/OR OBJECT
1025
DETERMINE A NEW RELATIVE ERROR AVERAGE
1030
SUBTRACT RELATIVE ERROR AVERAGE FROM EACH POINT CLOUD
1040
COMBINE CORRECTED/ COMPENSATED POINT CLOUDS
1050
GENERATE DIMENSIONAL PROFILE OF TARGET SURFACE AND/OR OBJECT
1060
END

FIG. 21

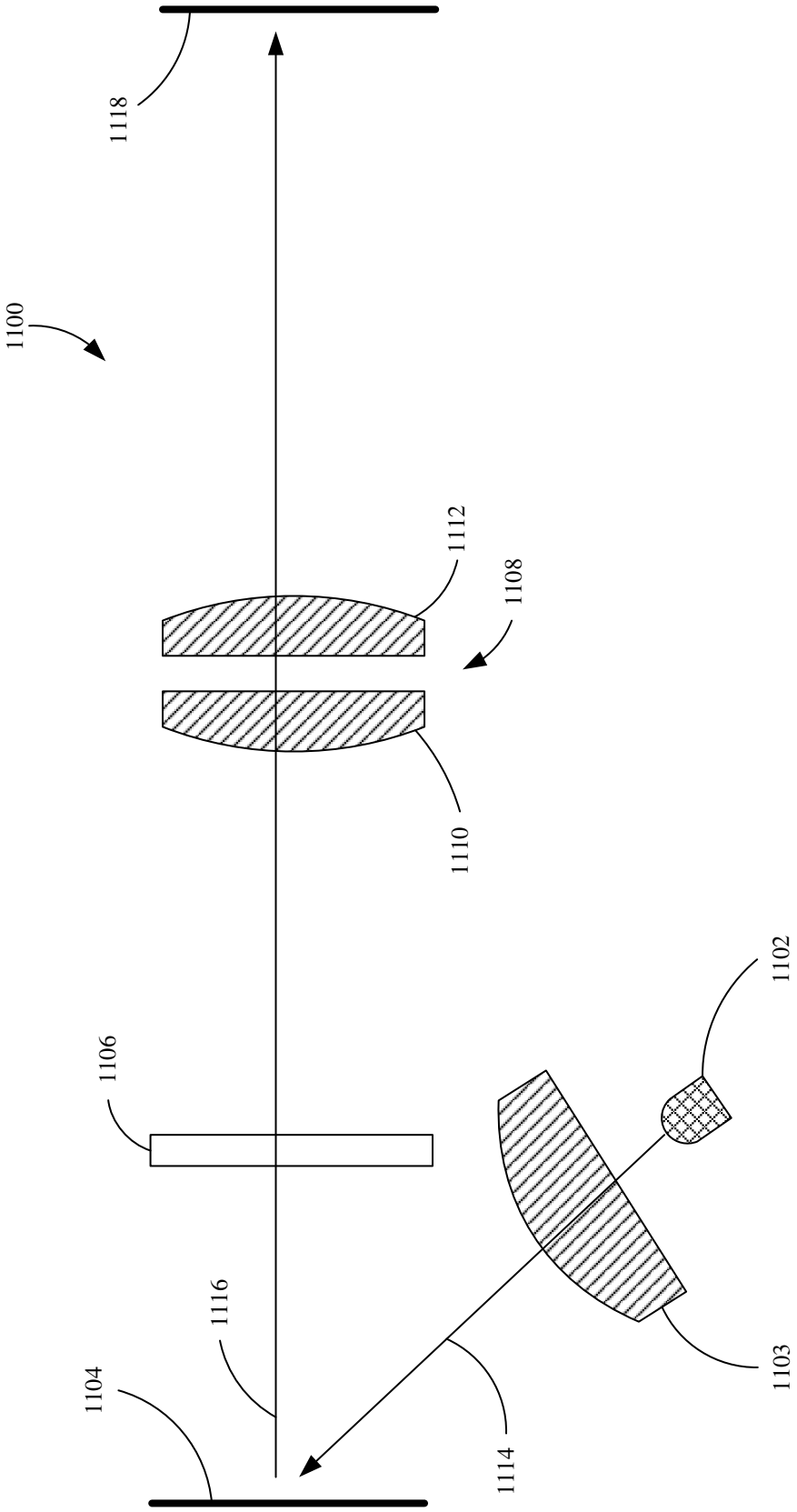

FIG. 22A

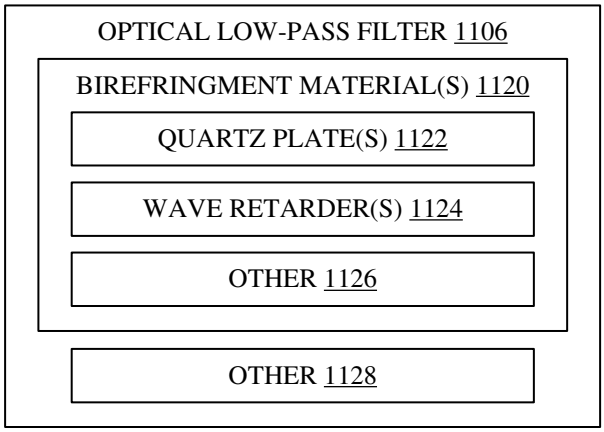
OPTICAL LOW-PASS FILTER 1106
BIREFRINGMENT MATERIAL(S) 1120
QUARTZ PLATE(S) 1122
WAVE RETARDER(S) 1124
OTHER 1126
OTHER 1128

FIG. 22B

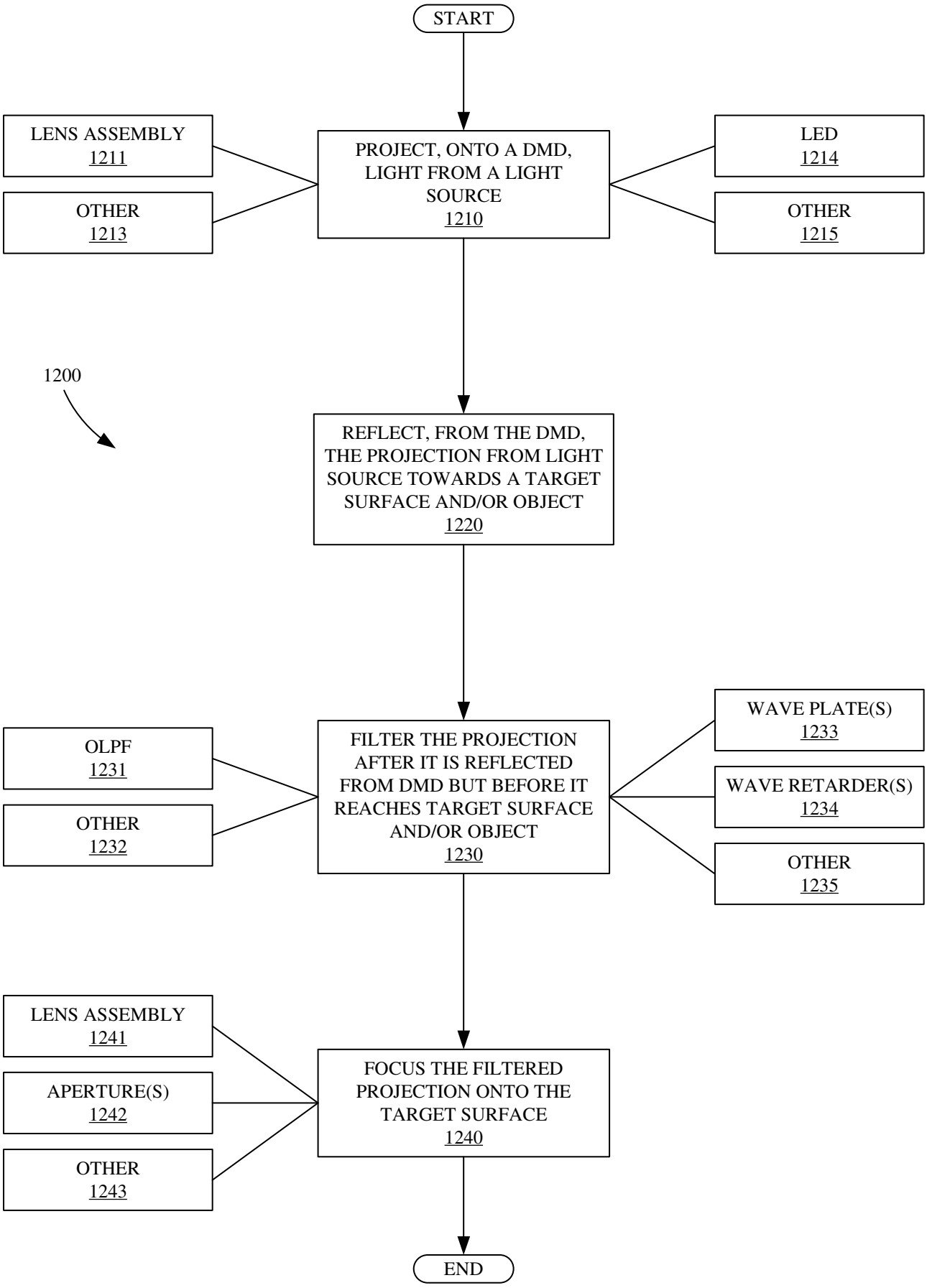
START
LENS ASSEMBLY
1211
OTHER
1213
PROJECT, ONTO A DMD, LIGHT FROM A LIGHT SOURCE
1210
LED
1214
OTHER
1215
1200
REFLECT, FROM THE DMD, THE PROJECTION FROM LIGHT SOURCE TOWARDS A TARGET SURFACE AND/OR OBJECT
1220
OLPF
1231
OTHER
1232
FILTER THE PROJECTION AFTER IT IS REFLECTED FROM DMD BUT BEFORE IT REACHES TARGET SURFACE AND/OR OBJECT
1230
WAVE PLATE(S)
1233
WAVE RETARDER(S)
1234
OTHER
1235
LENS ASSEMBLY
1241
APERTURE(S)
1242
OTHER
1243
FOCUS THE FILTERED PROJECTION ONTO THE TARGET SURFACE
1240
END

FIG. 23

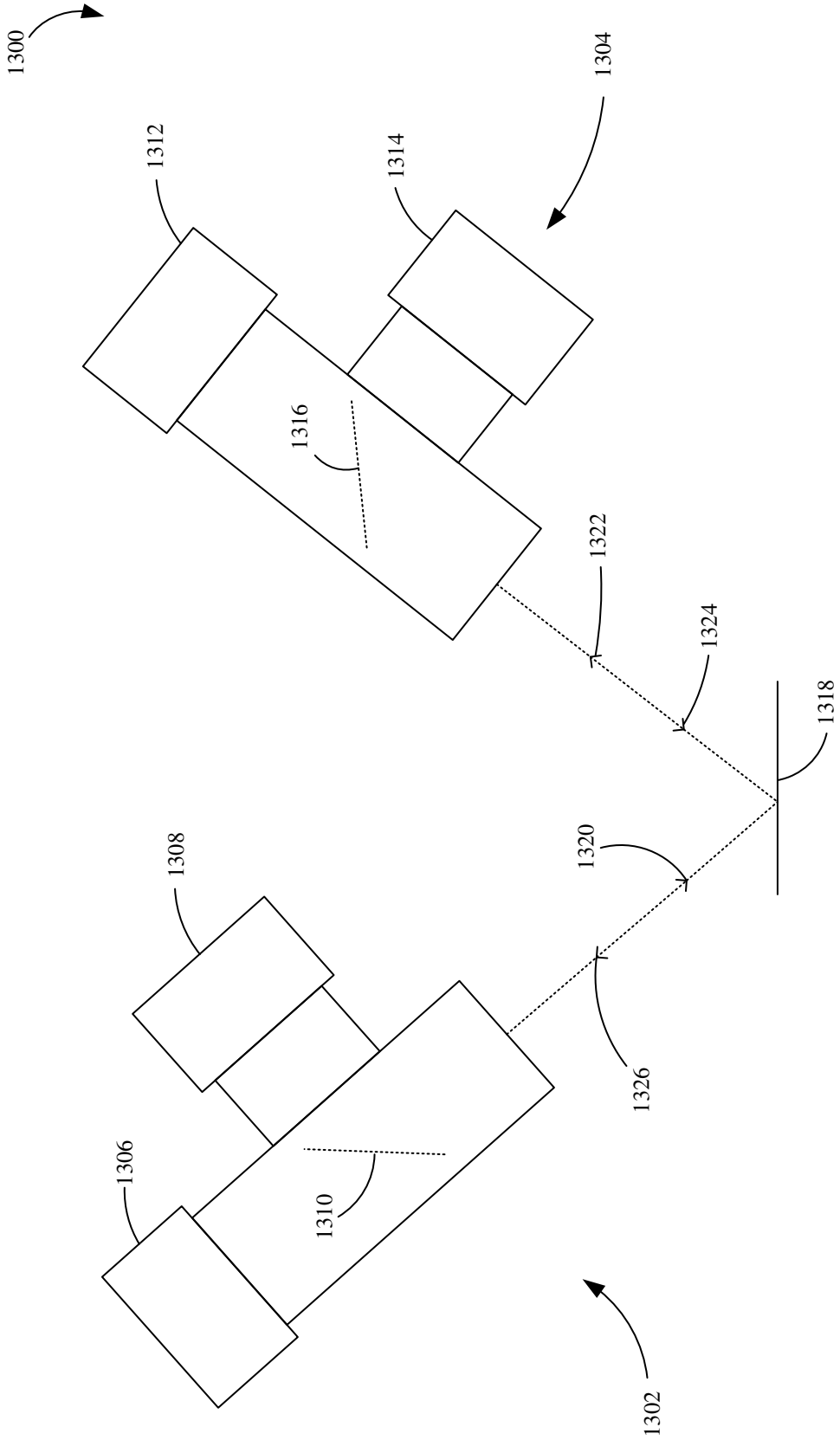
1300
1304
1312
1314
1316
1322
1324
1318
1320
1308
1326
1306
1310
1302

FIG. 24

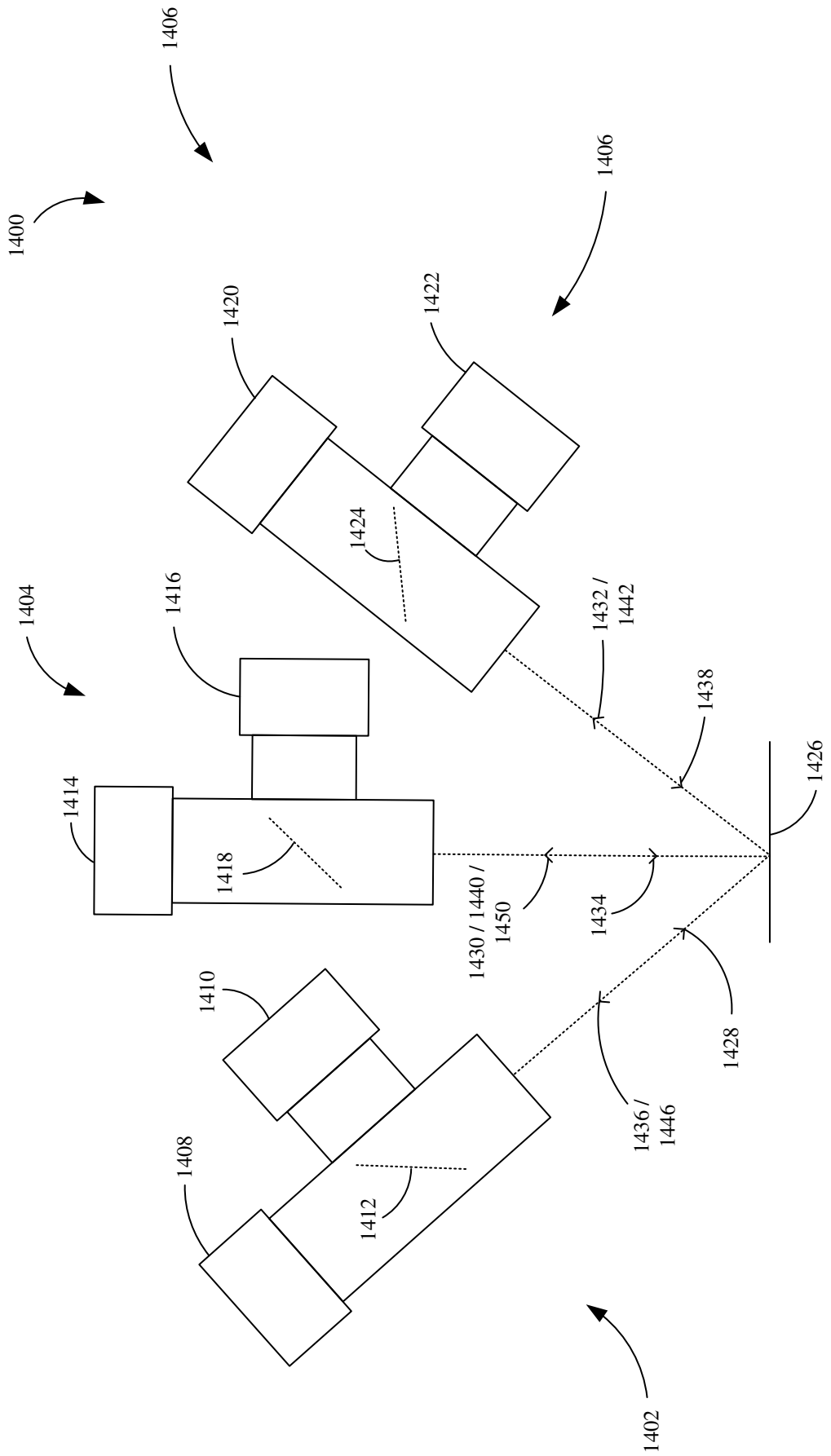
1400
1406
1406
1420
1422
1424
1404
1416
1432 / 1442
1438
1426
1414
1418
1430 / 1440 / 1450
1434
1410
1428
1436 / 1446
1408
1412
1402

FIG. 25

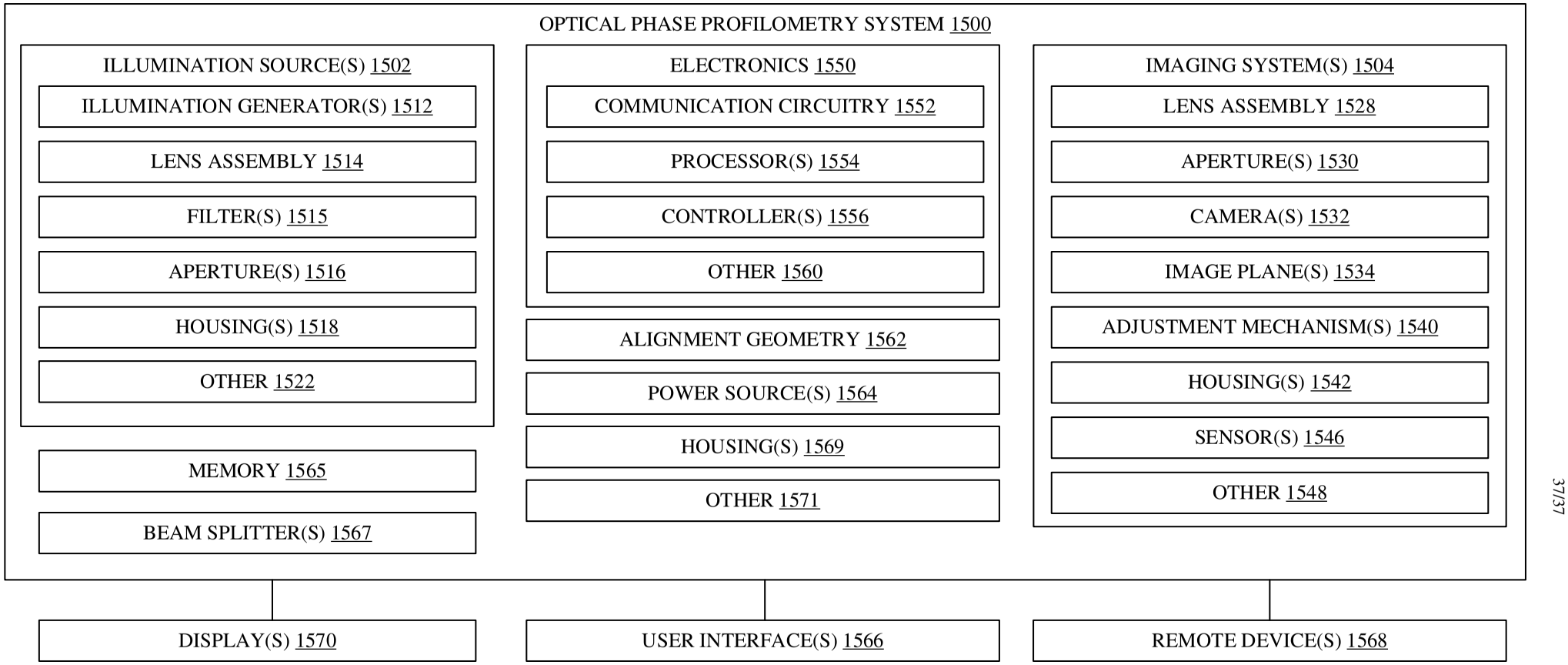
OPTICAL PHASE PROFILOMETRY SYSTEM 1500
ILLUMINATION SOURCE(S) 1502
ILLUMINATION GENERATOR(S) 1512
LENS ASSEMBLY 1514
FILTER(S) 1515
APERTURE(S) 1516
HOUSING(S) 1518
OTHER 1522
ELECTRONICS 1550
COMMUNICATION CIRCUITRY 1552
PROCESSOR(S) 1554
CONTROLLER(S) 1556
OTHER 1560
IMAGING SYSTEM(S) 1504
LENS ASSEMBLY 1528
APERTURE(S) 1530
CAMERA(S) 1532
IMAGE PLANE(S) 1534
ADJUSTMENT MECHANISM(S) 1540
HOUSING(S) 1542
SENSOR(S) 1546
OTHER 1548
ALIGNMENT GEOMETRY 1562
POWER SOURCE(S) 1564
HOUSING(S) 1569
OTHER 1571
MEMORY 1565
BEAM SPLITTER(S) 1567
DISPLAY(S) 1570
USER INTERFACE(S) 1566
REMOTE DEVICE(S) 1568

FIG. 26