(12) INTERNATIONAL APPLICATION PUBLISHED UNDER THE PATENT COOPERATION TREATY (PCT)

(19) World Intellectual Property Organization
International Bureau

(43) International Publication Date
13 March 2008 (13.03.2008)

PCT

(10) International Publication Number
WO 2008/030646 A2

(51) International Patent Classification: Not classified

(21) International Application Number:
PCT/US2007/070877

(22) International Filing Date: 11 June 2007 (11.06.2007)

(25) Filing Language: English

(26) Publication Language: English

(30) Priority Data:
11/515,653 6 September 2006 (06.09.2006) US

(71) Applicant *(for all designated States except US)*: **GENERAL ELECTRIC COMPANY** [US/US]; 1 River Road, Schenectady, NY 12345 (US).

(72) Inventors; and

(75) Inventors/Applicants *(for US only)*: **WEI, Chang** [US/US]; 1013 North Wood Court, Niskayuna, NY 12309 (US). **DU, Yu** [CN/CN]; 780 Lianxi Road, Pudong New Area, Room 602, Building 1, Shanghai 201204 (CN). **WEI, Cai** [CN/CN]; 2688 Human Road, Nanhui, Shanghai 201350 (CN). **XIONG, Rihua** [CN/CN]; 916 Fanghua Road, Pudong New Area, Room 72-401, Shanghai 201203 (CN). **CAO, Lei** [CN/CN]; 127 Yulan Road, Pudong New Area, Building 6, Room 502, Shanghai 201203 (CN).

(74) Agents: **TOOP, Barbara, A.** et al.; General Electric Company, Global Patent Operation, 187 Danbury Road, Suite 204, Wilton, CT 06897 (US).

(81) Designated States *(unless otherwise indicated, for every kind of national protection available)*: AE, AG, AL, AM, AT, AU, AZ, BA, BB, BG, BH, BR, BW, BY, BZ, CA, CH, CN, CO, CR, CU, CZ, DE, DK, DM, DO, DZ, EC, EE, EG, ES, FI, GB, GD, GE, GH, GM, GT, HN, HR, HU, ID, IL, IN, IS, JP, KE, KG, KM, KN, KP, KR, KZ, LA, LC, LK, LR, LS, LT, LU, LY, MA, MD, ME, MG, MK, MN, MW, MX, MY, MZ, NA, NG, NI, NO, NZ, OM, PG, PH, PL, PT, RO, RS, RU, SC, SD, SE, SG, SK, SL, SM, SV, SY, TJ, TM, TN, TR, TT, TZ, UA, UG, US, UZ, VC, VN, ZA, ZM, ZW.

(84) Designated States *(unless otherwise indicated, for every kind of regional protection available)*: ARIPO (BW, GH, GM, KE, LS, MW, MZ, NA, SD, SL, SZ, TZ, UG, ZM, ZW), Eurasian (AM, AZ, BY, KG, KZ, MD, RU, TJ, TM), European (AT, BE, BG, CH, CY, CZ, DE, DK, EE, ES, FI, FR, GB, GR, HU, IE, IS, IT, LT, LU, LV, MC, MT, NL, PL, PT, RO, SE, SI, SK, TR), OAPI (BF, BJ, CF, CG, CI, CM, GA, GN, GQ, GW, ML, MR, NE, SN, TD, TG).

Declarations under Rule 4.17:

— *as to applicant's entitlement to apply for and be granted a patent (Rule 4.17(ii))*

[Continued on next page]

(54) Title: NON-FARADAY BASED SYSTEMS, DEVICES AND METHODS FOR REMOVING IONIC SPECIES FROM LIQUID

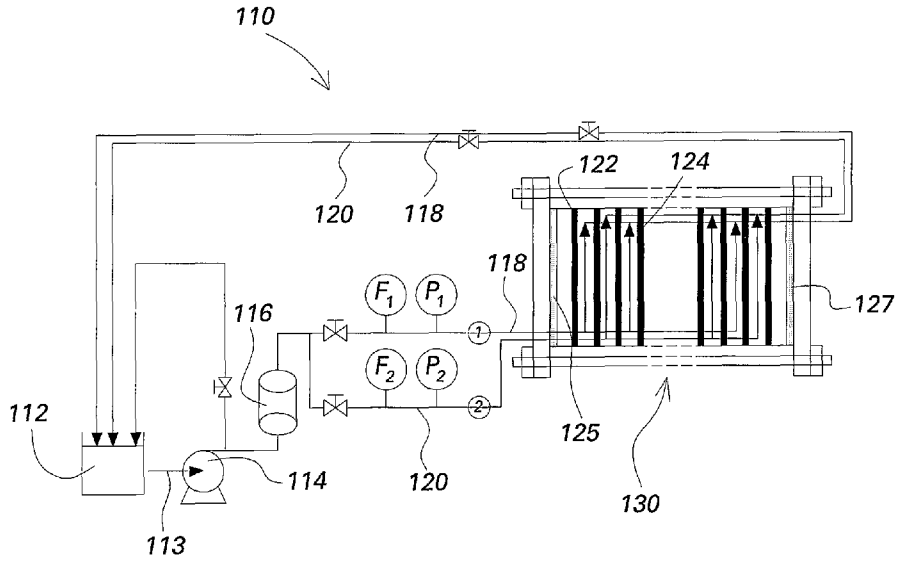

(57) Abstract: A non-Faraday ionic species removal process and system is described. The system includes a power supply, a pump for transporting a liquid through the system, and a plurality of porous electrodes. The electrodes, each include an electrically conductive porous portion. The electrodes may also include a substrate contiguous with the porous portion. The porous electrode can be utilized in electrodialysis and electrodialysis reversal systems. A method for forming a porous electrode is described.

WO 2008/030646 A2

— *as to the applicant's entitlement to claim the priority of the earlier application (Rule 4.17(iii))*

Published:

— *without international search report and to be republished upon receipt of that report*