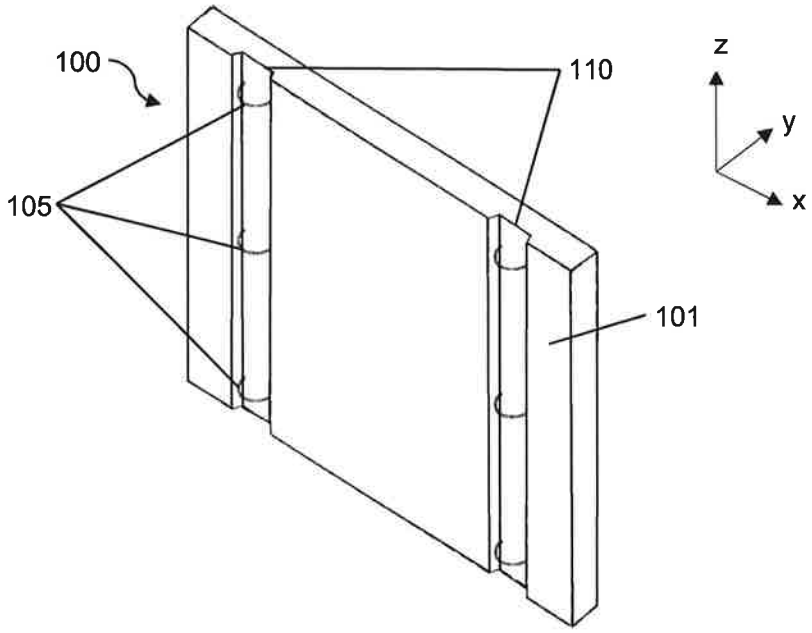

Figure 3A

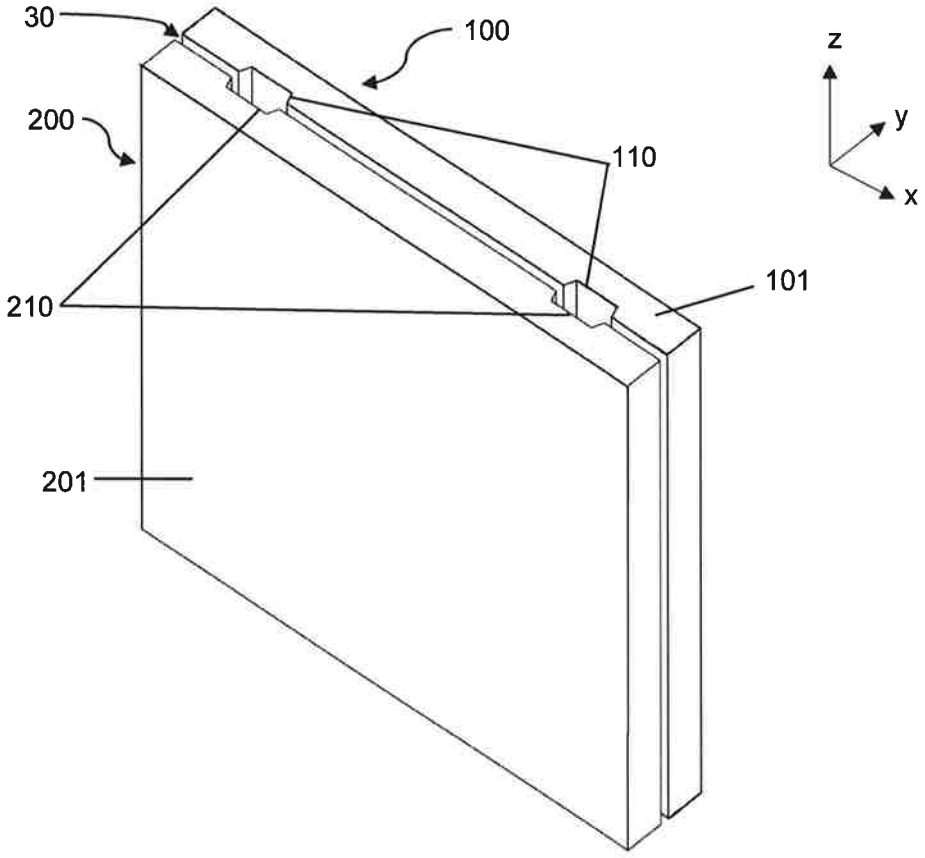

Figure 3B

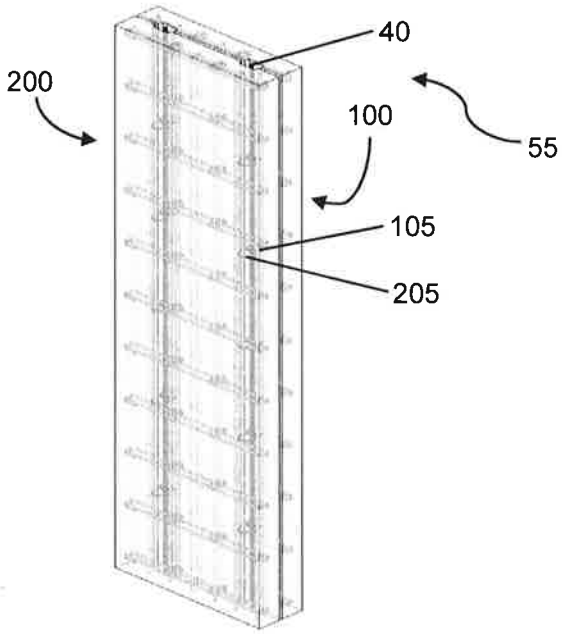

Figure 9

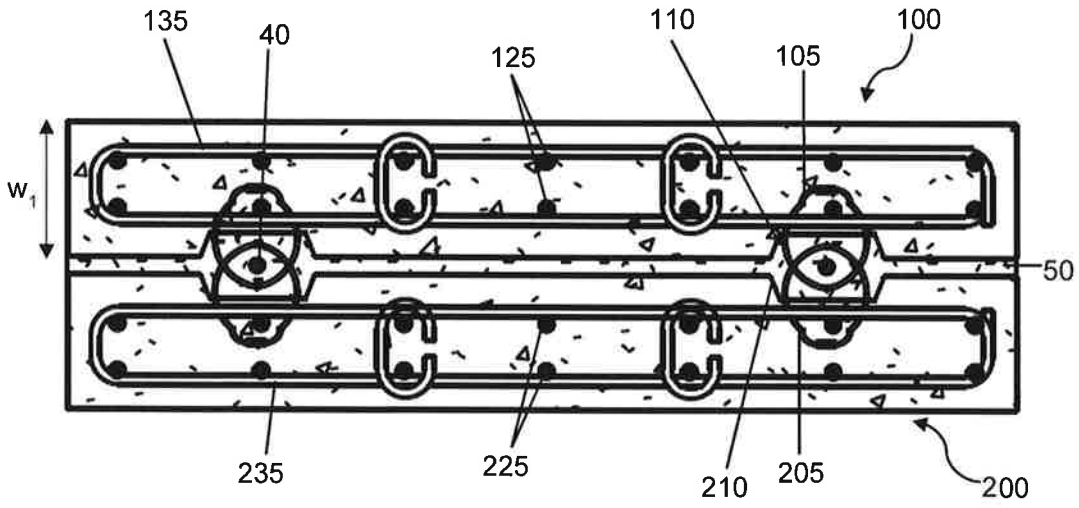

Figure 10