**PCT** WORLD INTELLECTUAL PROPERTY ORGANIZATION
International Bureau

INTERNATIONAL APPLICATION PUBLISHED UNDER THE PATENT COOPERATION TREATY (PCT)

(51) International Patent Classification 6 : H03L 7/00 — A1

(11) International Publication Number: **WO 98/05126**

(43) International Publication Date: 5 February 1998 (05.02.98)

(21) International Application Number: PCT/US97/13007

(22) International Filing Date: 24 July 1997 (24.07.97)

(30) Priority Data:
08/687,763 26 July 1996 (26.07.96) US

(71) Applicant: EXEL MICROELECTRONICS, INC. [US/US]; 2150 Commerce Drive, San Jose, CA 95131-1804 (US).

(72) Inventor: SANDHU, Bal, S.; 3641 Pintail Terrace, Fremont, CA 94536 (US).

(74) Agents: SEKIMURA, Gerald, T. et al.; Limbach & Limbach L.L.P., 2001 Ferry Building, San Francisco, CA 94111-4262 (US).

(81) Designated States: AL, AM, AT, AU, AZ, BA, BB, BG, BR, BY, CA, CH, CN, CU, CZ, DE, DK, EE, ES, FI, GB, GE, GH, HU, IL, IS, JP, KE, KG, KP, KR, KZ, LC, LK, LR, LS, LT, LU, LV, MD, MG, MK, MN, MW, MX, NO, NZ, PL, PT, RO, RU, SD, SE, SG, SI, SK, SL, TJ, TM, TR, TT, UA, UG, UZ, VN, YU, ZW, ARIPO patent (GH, KE, LS, MW, SD, SZ, UG, ZW), Eurasian patent (AM, AZ, BY, KG, KZ, MD, RU, TJ, TM), European patent (AT, BE, CH, DE, DK, ES, FI, FR, GB, GR, IE, IT, LU, MC, NL, PT, SE), OAPI patent (BF, BJ, CF, CG, CI, CM, GA, GN, ML, MR, NE, SN, TD, TG).

**Published**
*With international search report.*

(54) Title: POWER-UP DETECTOR FOR LOW POWER SYSTEMS

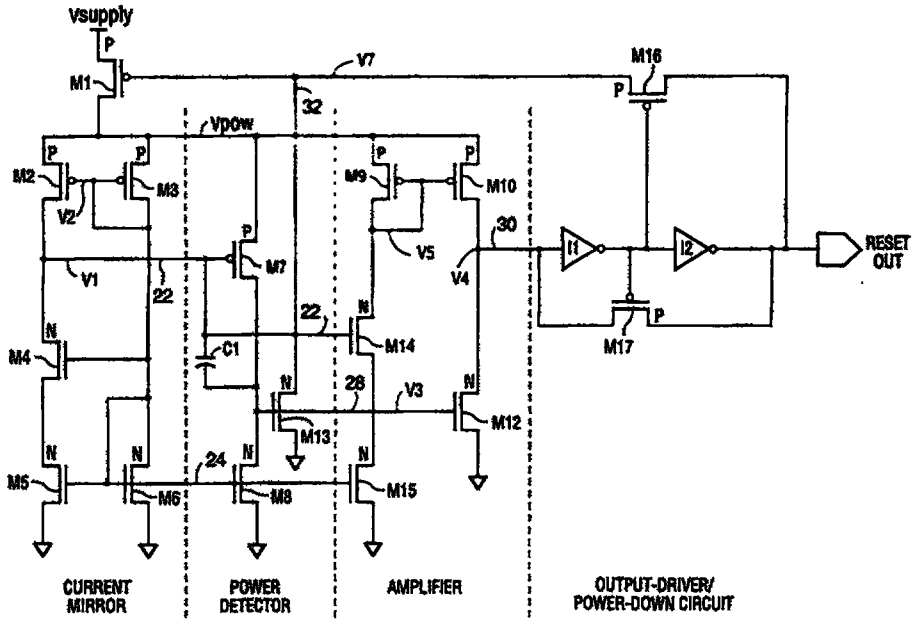


(57) Abstract

A power-up reset detector circuit is described which uses the threshold voltages of NMOS and PMOS transistors (M7 and M8) to detect the power-up of integrated circuits, and uses a current mirror (M2 through M6) to track power supply and process variations.