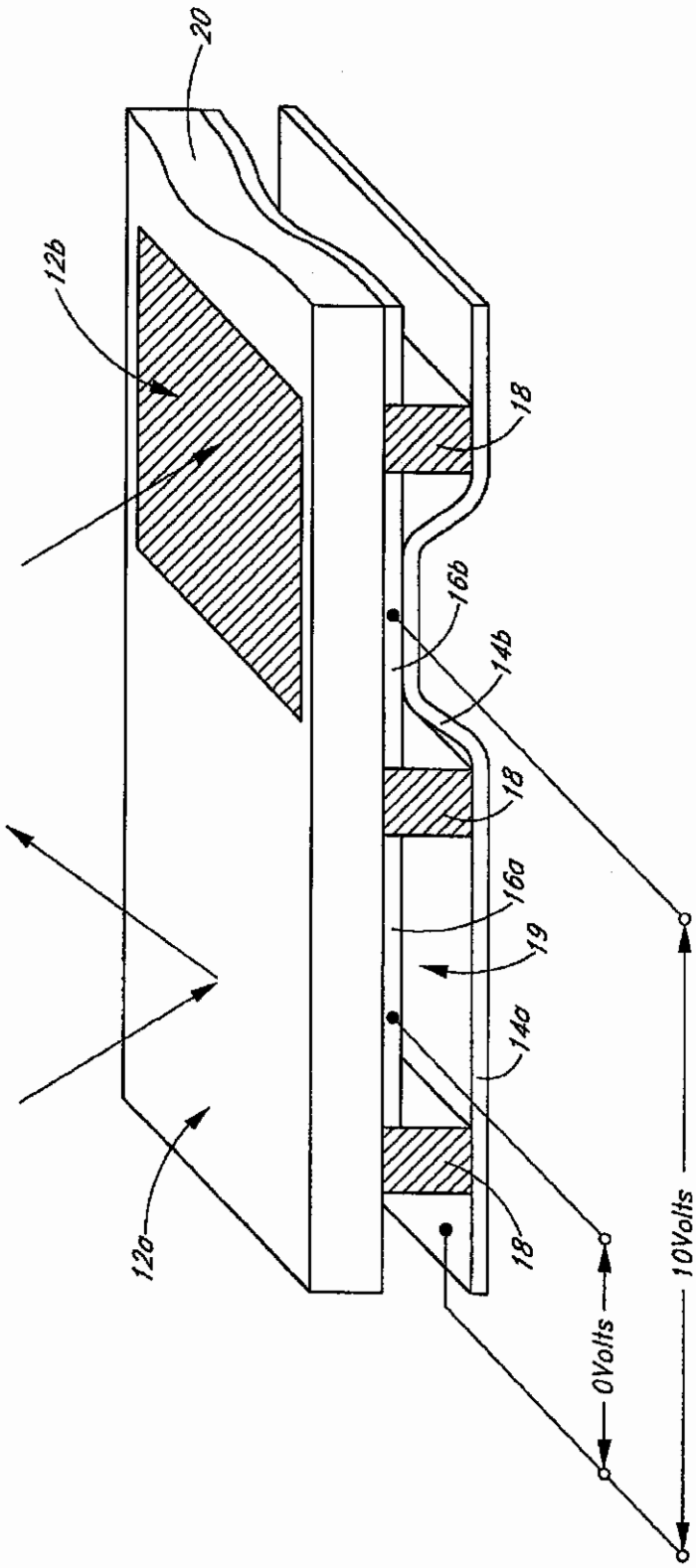

FIG. 1

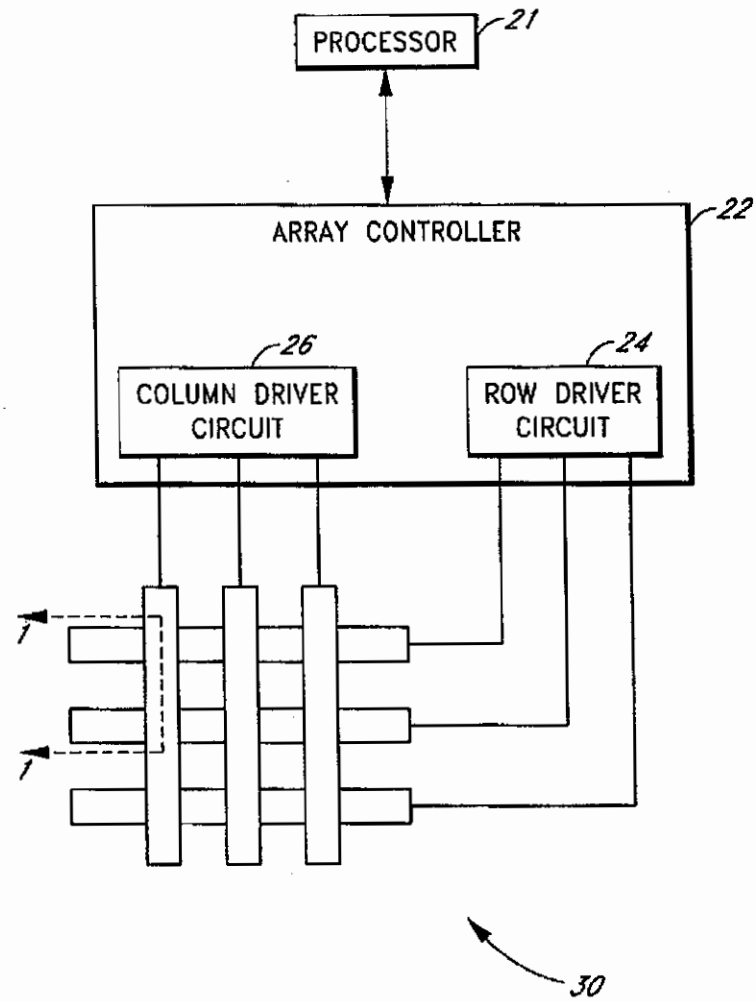
PROCESSOR
21
ARRAY CONTROLLER
22
26
COLUMN DRIVER CIRCUIT
24
ROW DRIVER CIRCUIT
1
1
30

FIG. 2

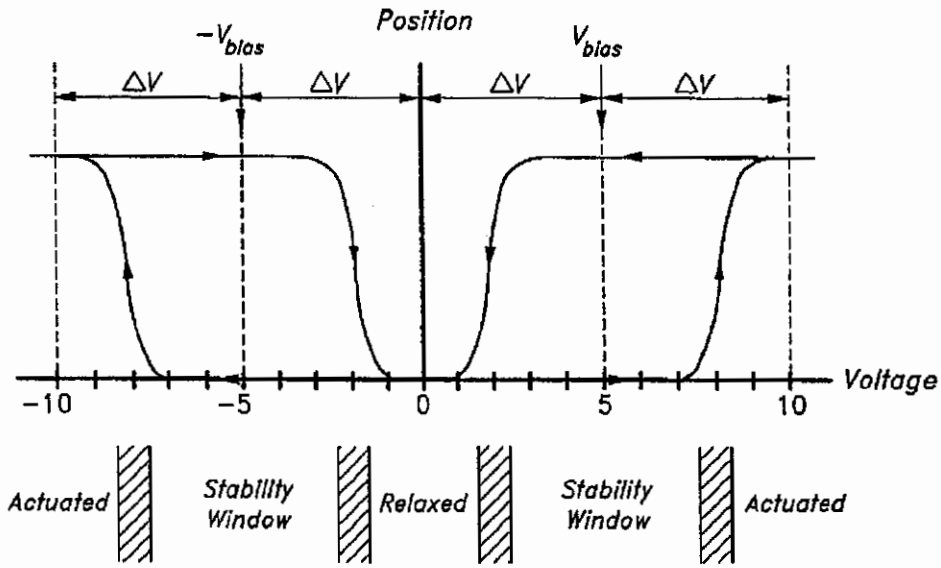

FIG. 3

Row Output Signals	Column Output Signals: $+V_{bias}$	Column Output Signals: $-V_{bias}$
0	Stable	Stable
+ ΔV	Relax	Actuate
− ΔV	Actuate	Relax

FIG. 4

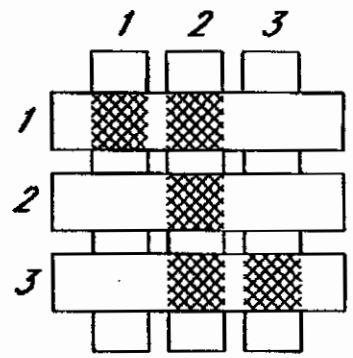
1
2
3
1
2
3
30

FIG. 5A

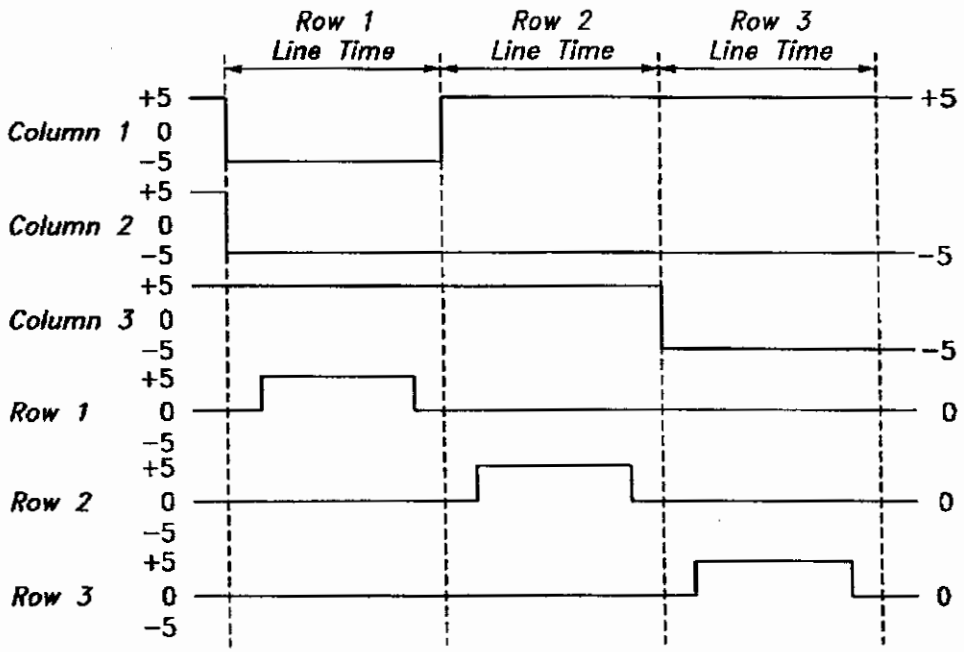
Row 1
Line Time
Row 2
Line Time
Row 3
Line Time
Column 1
Column 2
Column 3
Row 1
Row 2
Row 3
+5
0
−5
+5
+5
−5
−5
0
0
0

FIG. 5B

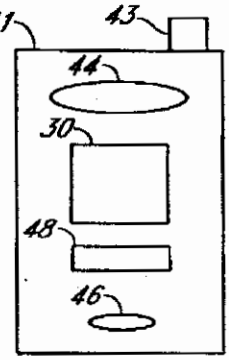
40
41
43
44
30
48
46

FIG. 6A

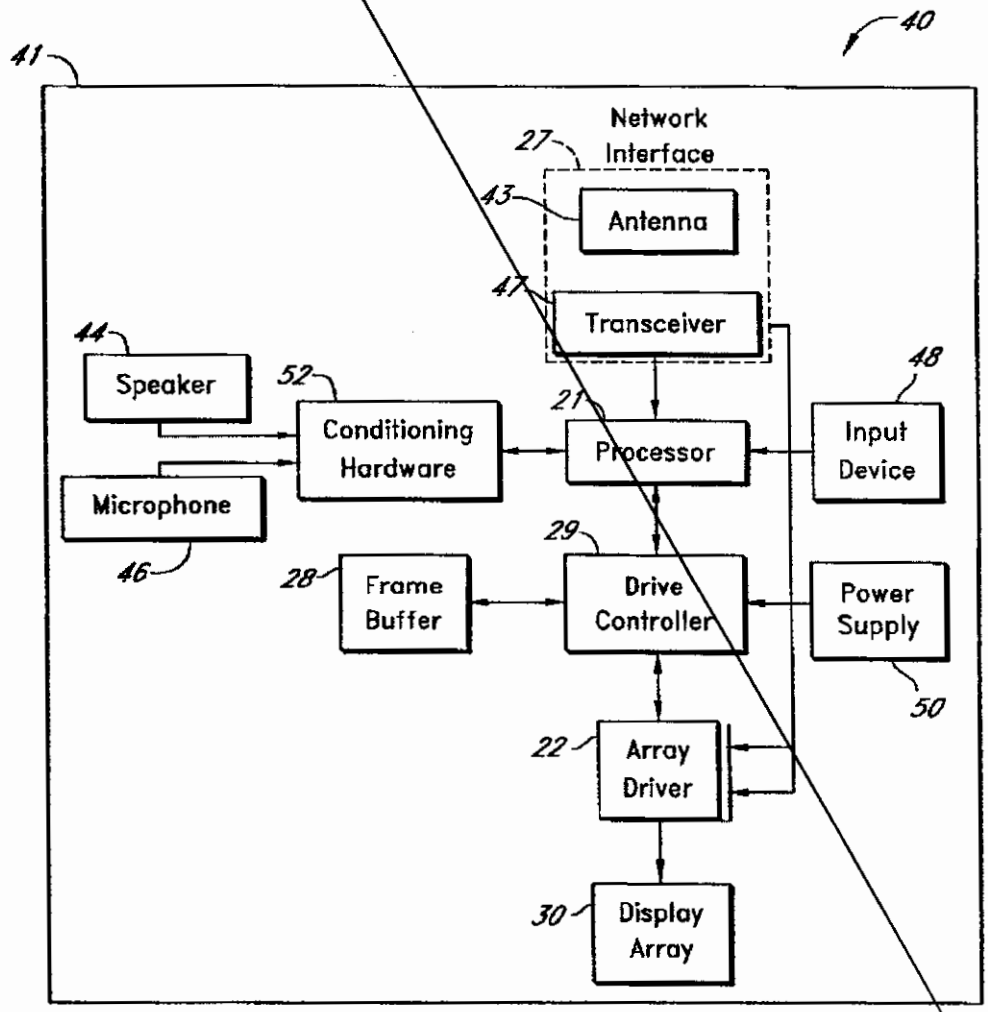
40
41
Network Interface
27
43
Antenna
47
Transceiver
44
Speaker
52
Conditioning Hardware
21
Processor
48
Input Device
Microphone
46
29
28
Frame Buffer
Drive Controller
Power Supply
50
22
Array Driver
30
Display Array

FIG. 6B

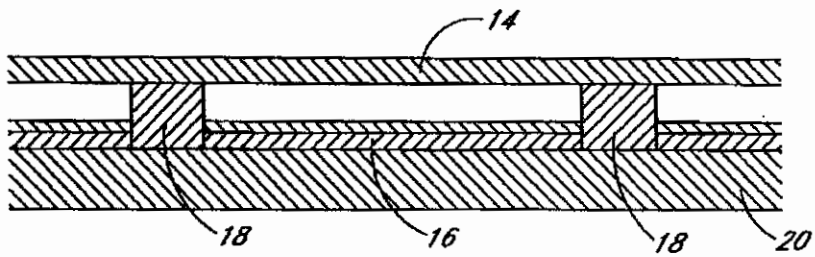

FIG. 7A

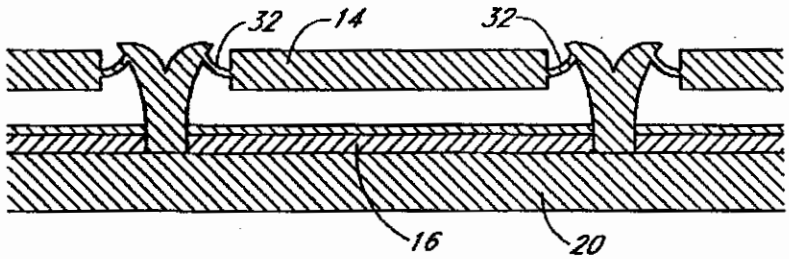

FIG. 7B

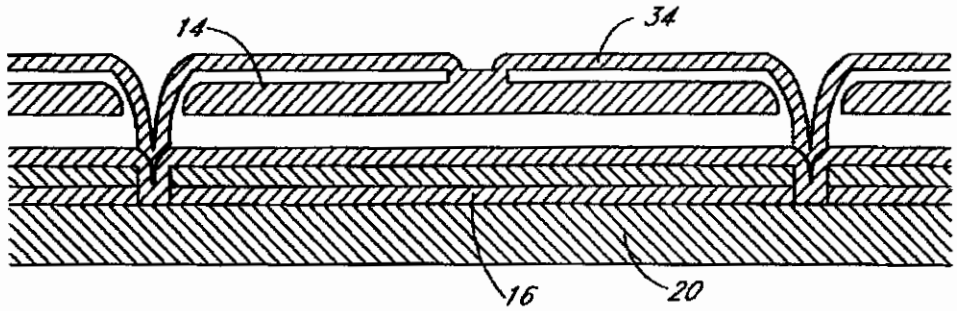

FIG. 7C

~~7/19~~

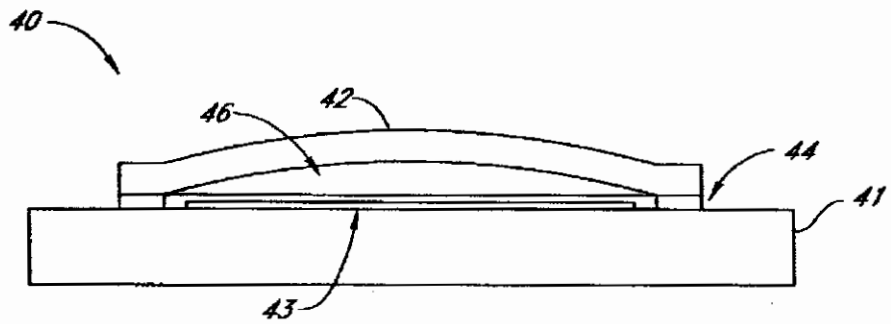

FIG. 8A

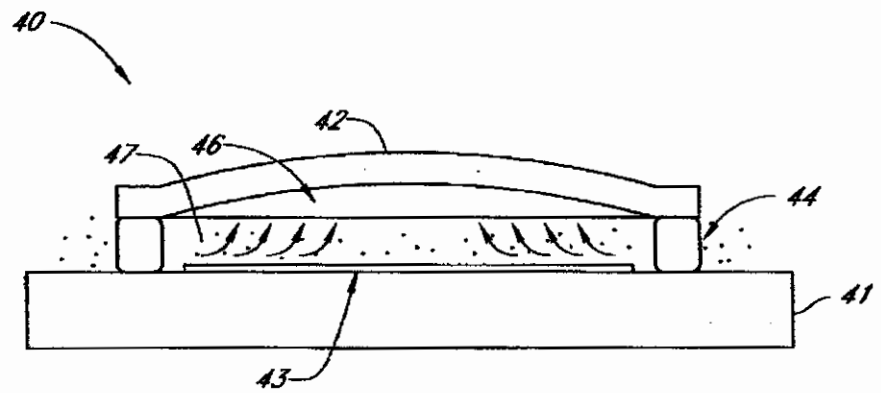

FIG. 8B

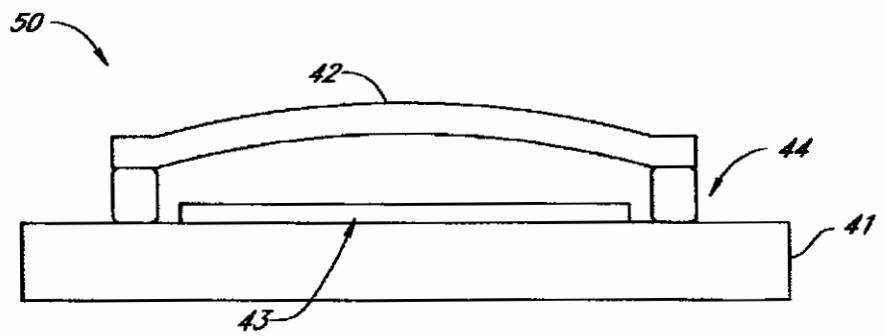

FIG. 8C

~~8/19~~

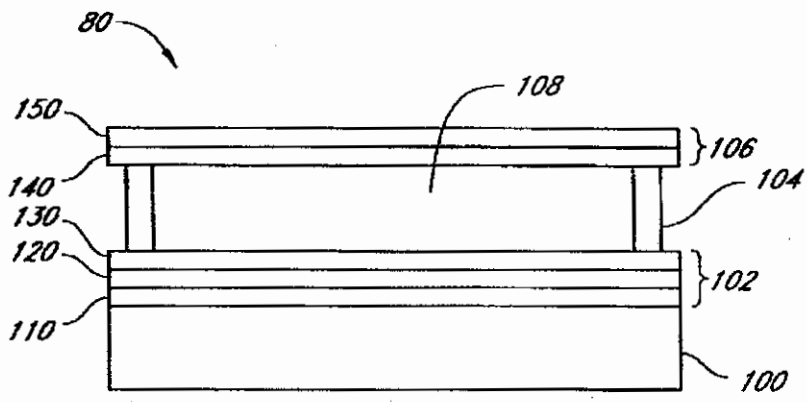

FIG. 9

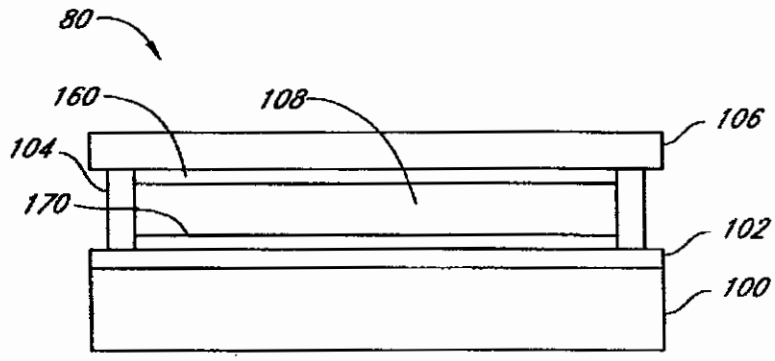

FIG. 10

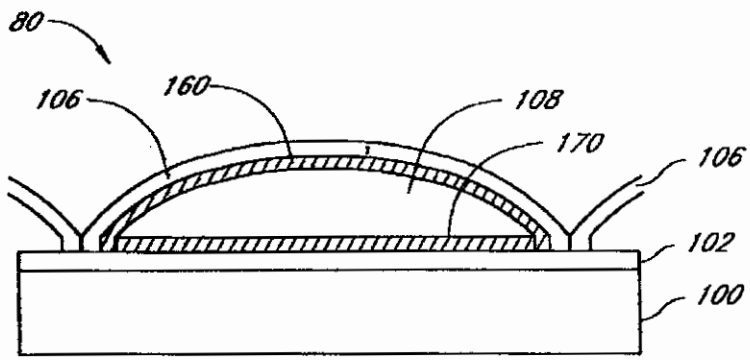

FIG. 11

~~9/19~~

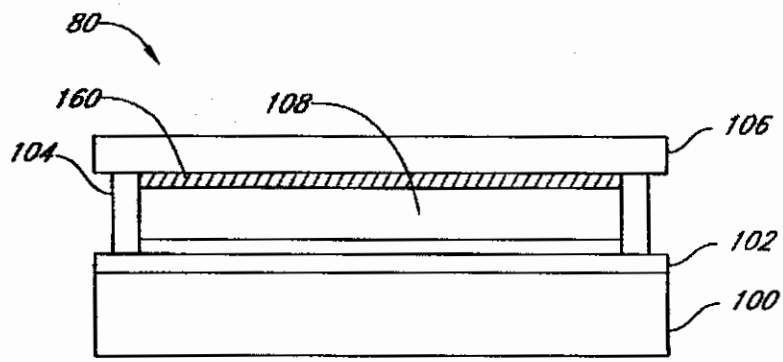

FIG. 12A

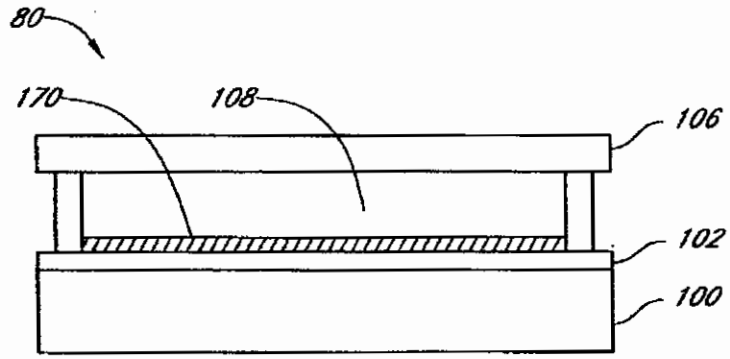

FIG. 12B

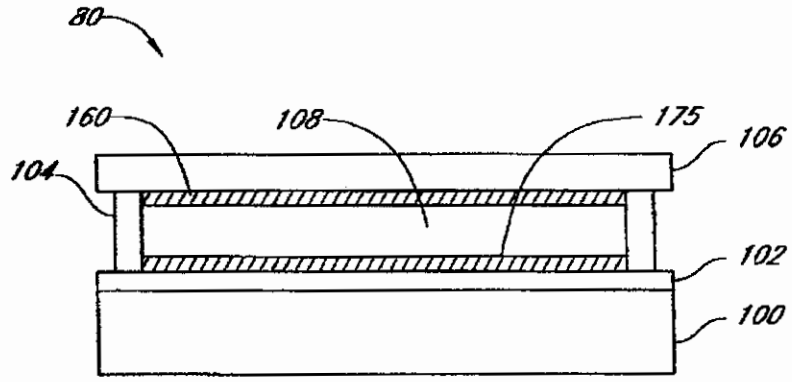

FIG. 12C

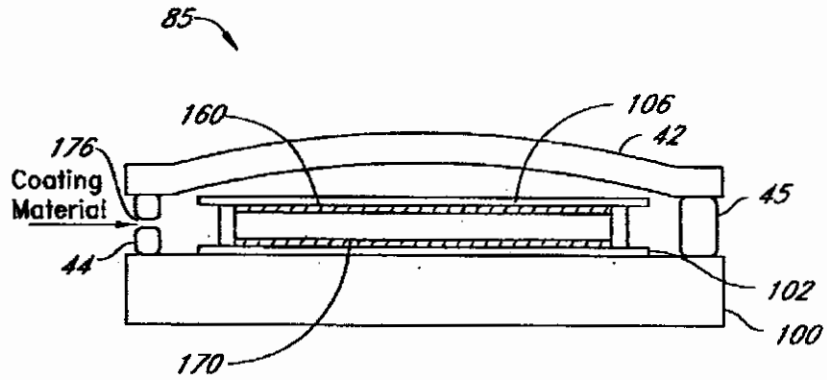

FIG. 13A

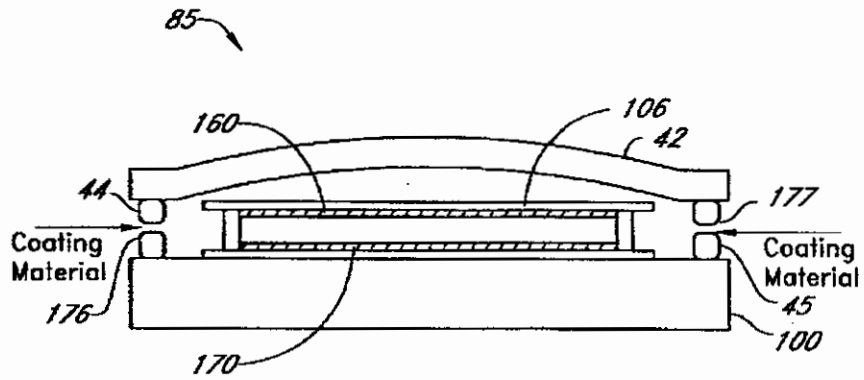

FIG. 13B

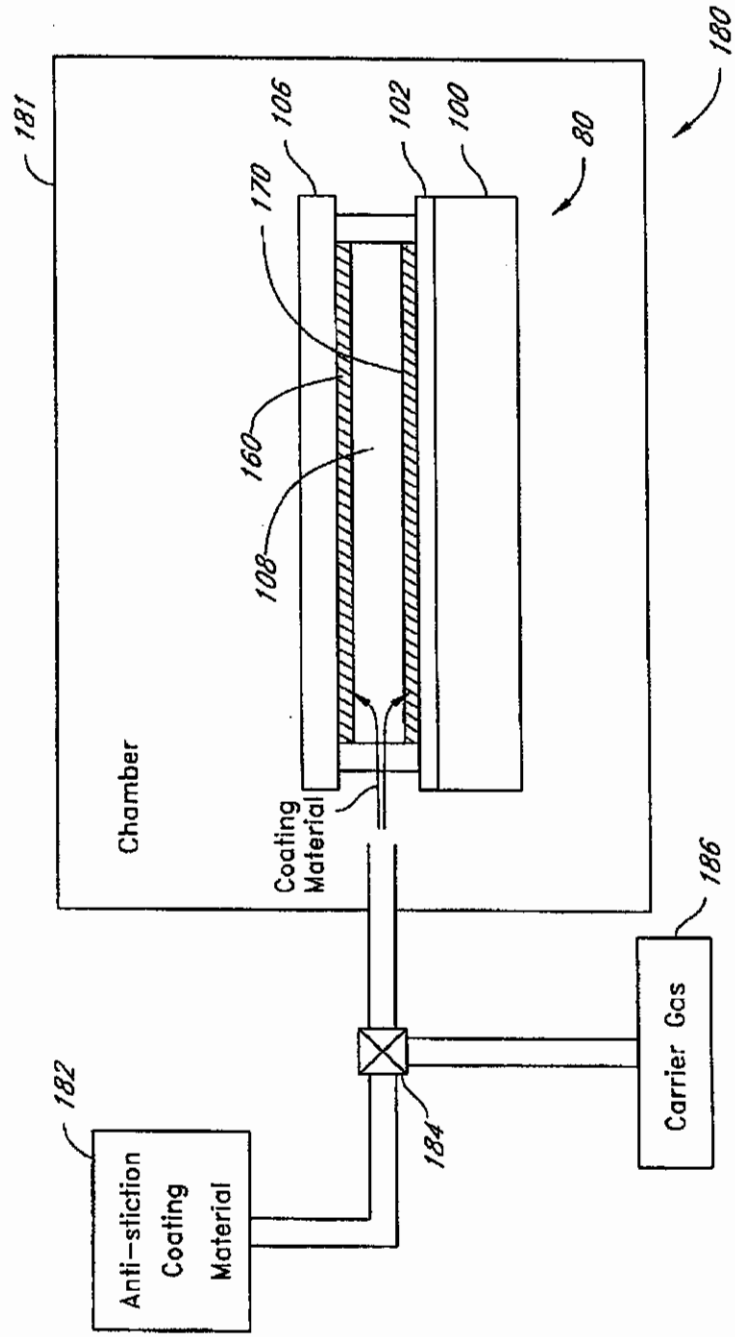
180
181
106
102
100
80
170
160
108
Chamber
Coating Material
186
Carrier Gas
182
Anti-stiction Coating Material
184

FIG. 14

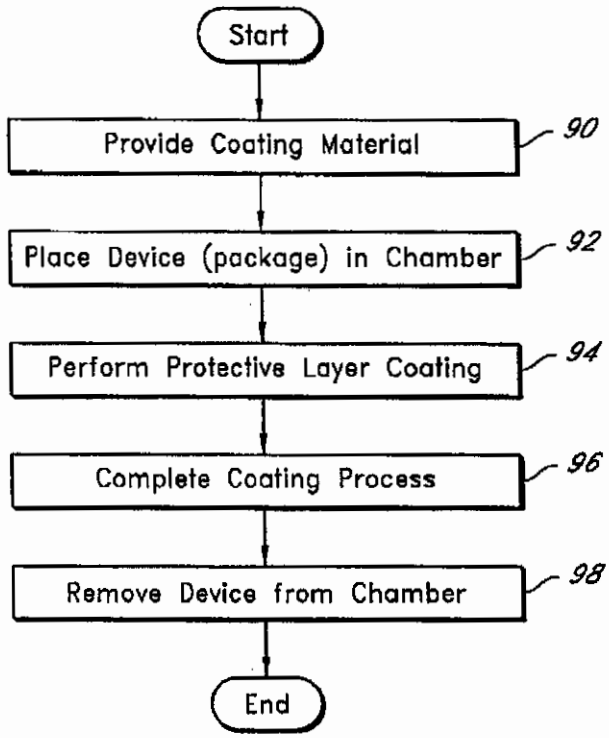
Start
Provide Coating Material
90
Place Device (package) in Chamber
92
Perform Protective Layer Coating
94
Complete Coating Process
96
Remove Device from Chamber
98
End

FIG. 15

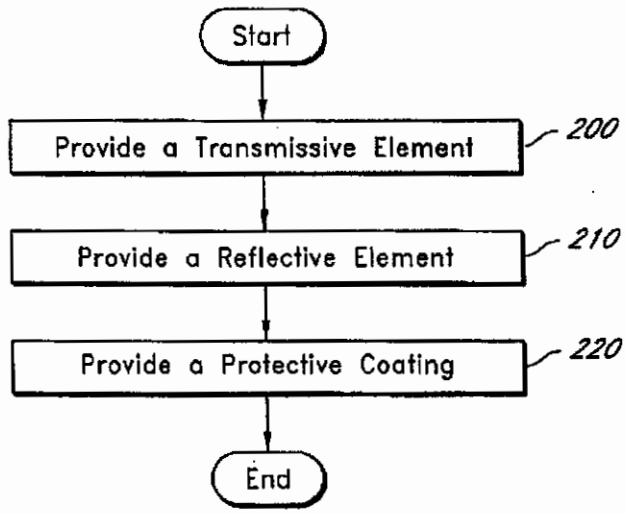
Start
Provide a Transmissive Element
200
Provide a Reflective Element
210
Provide a Protective Coating
220
End

FIG. 16

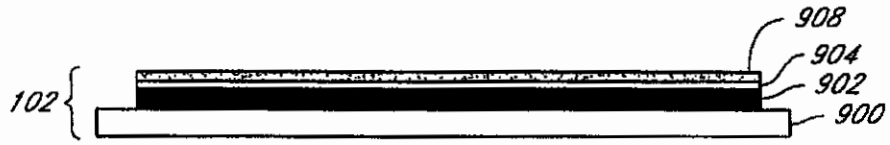

FIG. 17

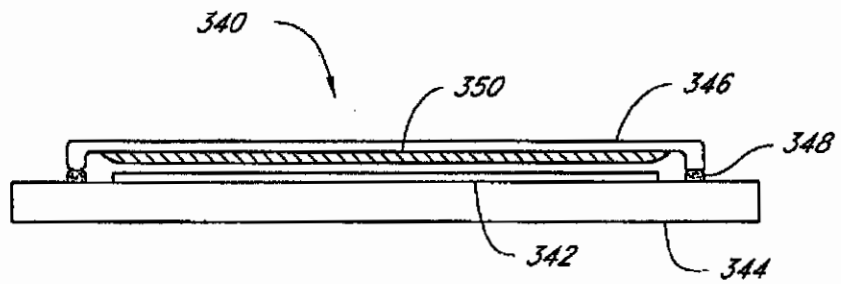

FIG. 18A

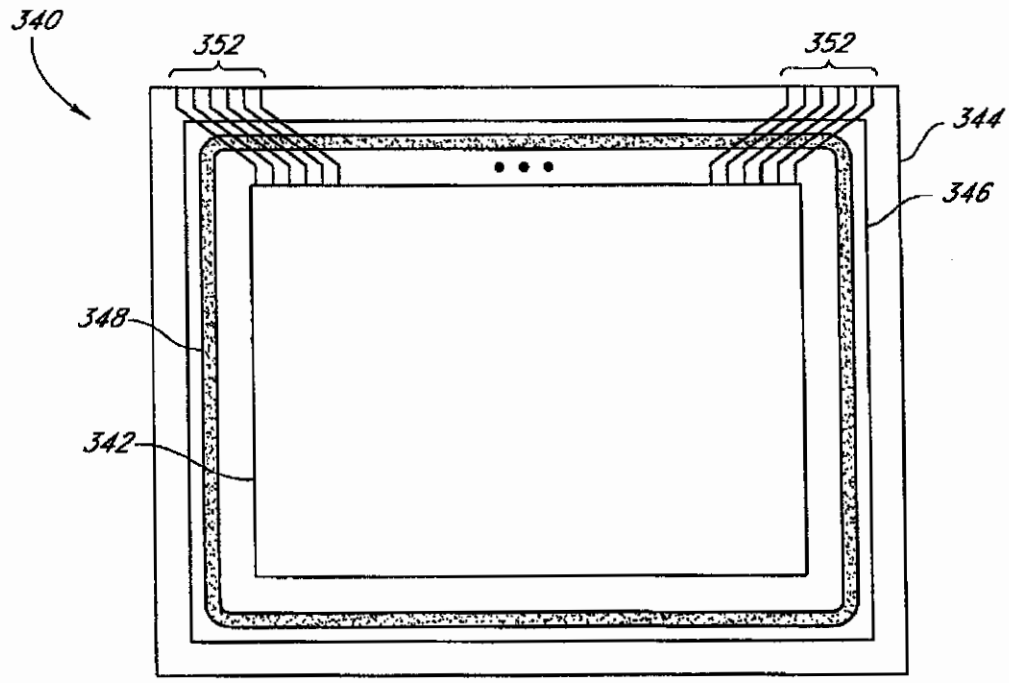

FIG. 18B

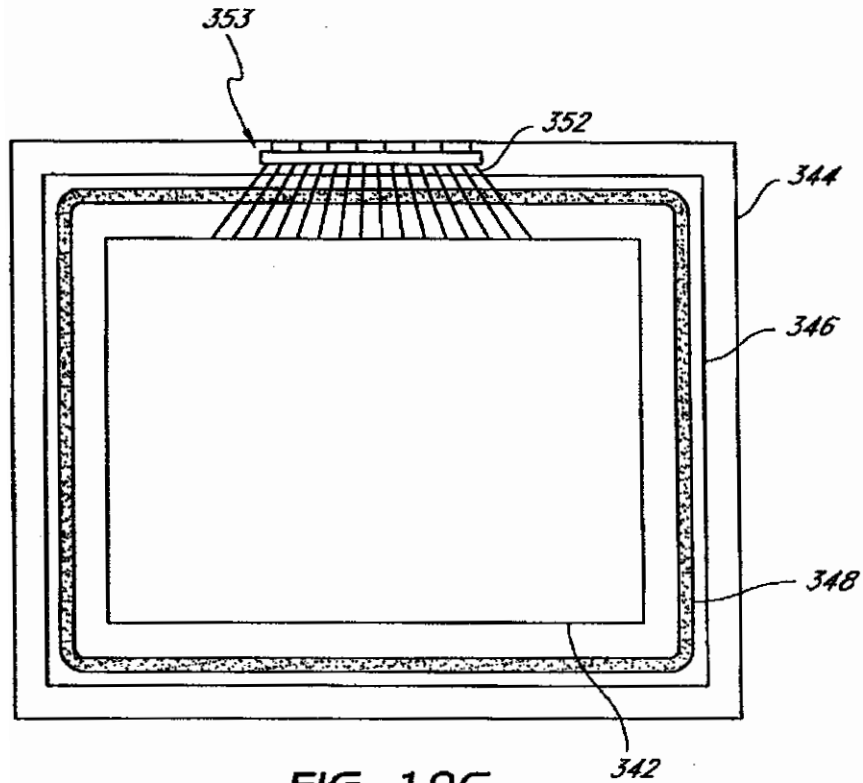

FIG. 18C

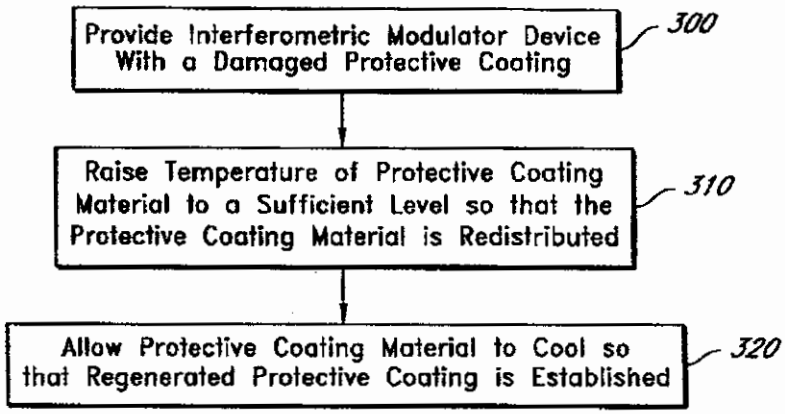

FIG. 18D

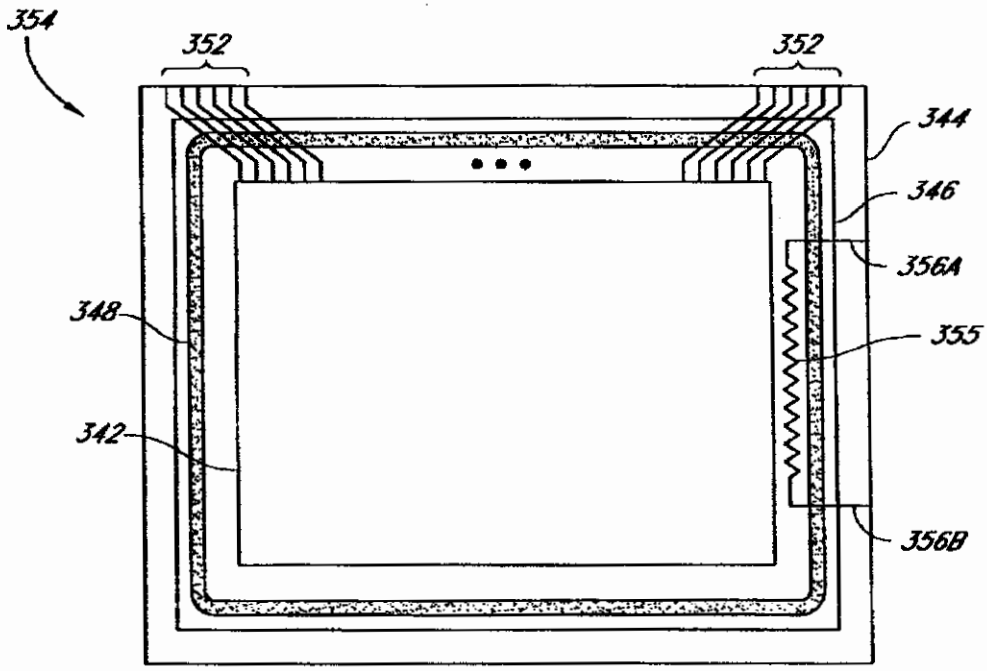

FIG. 19

~~16/19~~

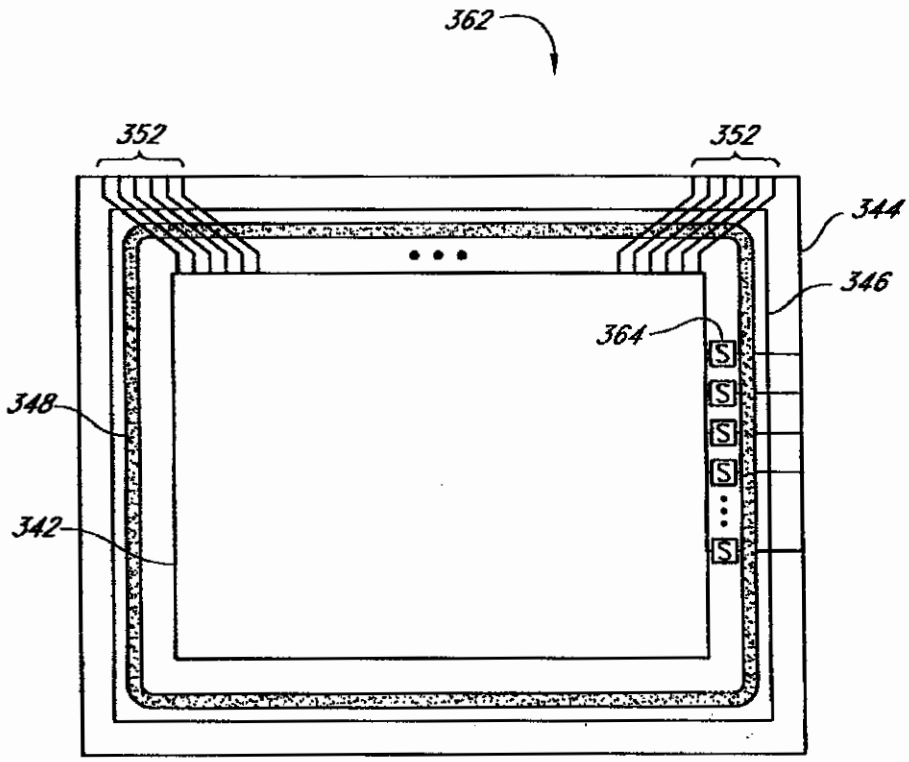

FIG. 20A

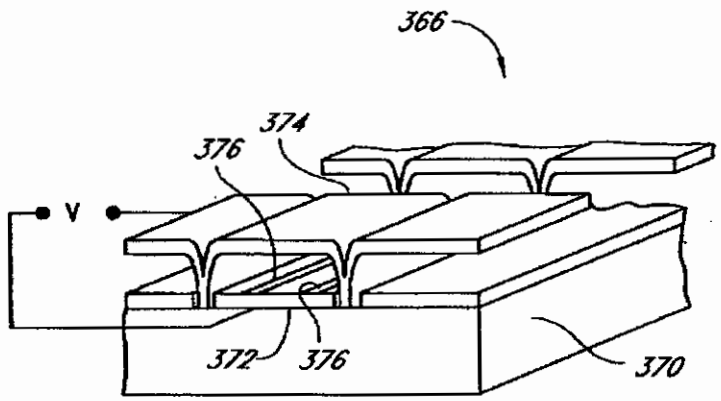

FIG. 20B

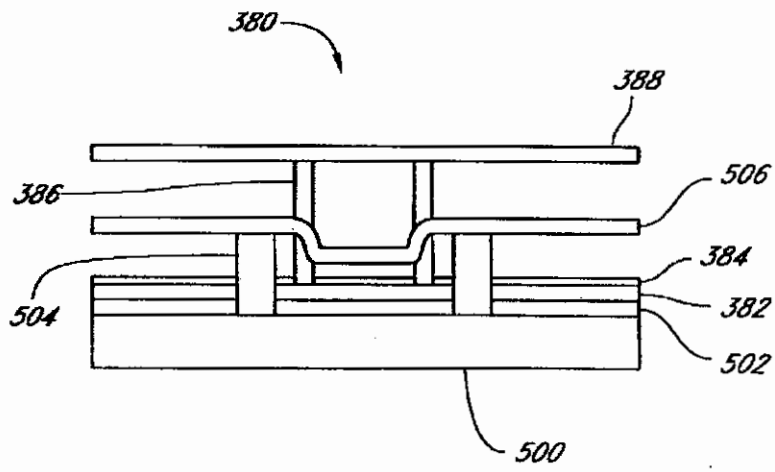

FIG. 21A

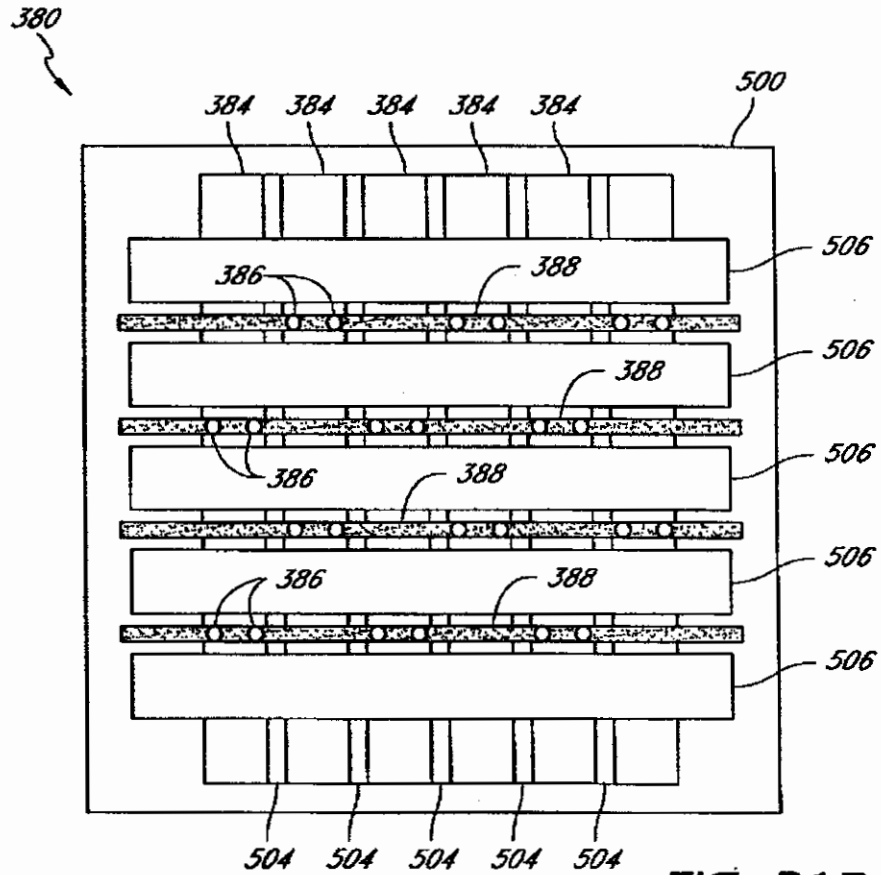

FIG. 21B

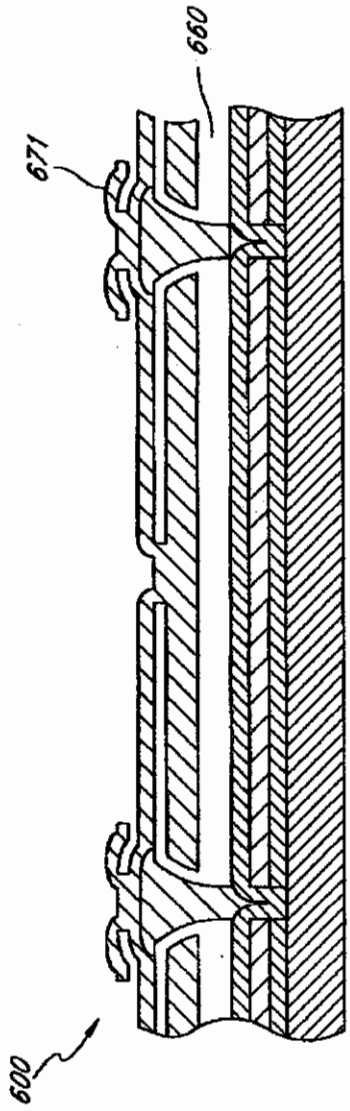

FIG. 22

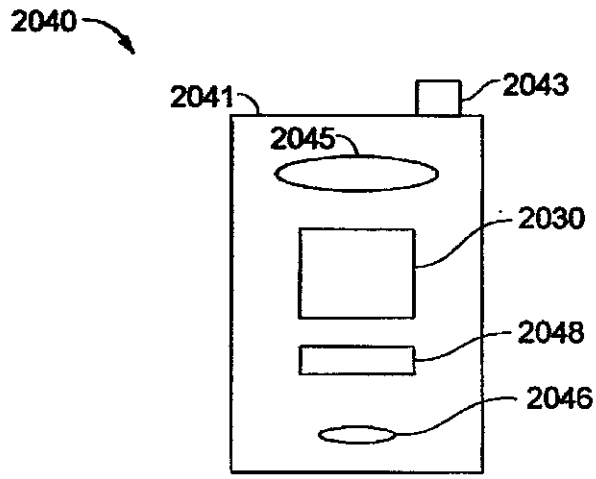

FIG. 23A

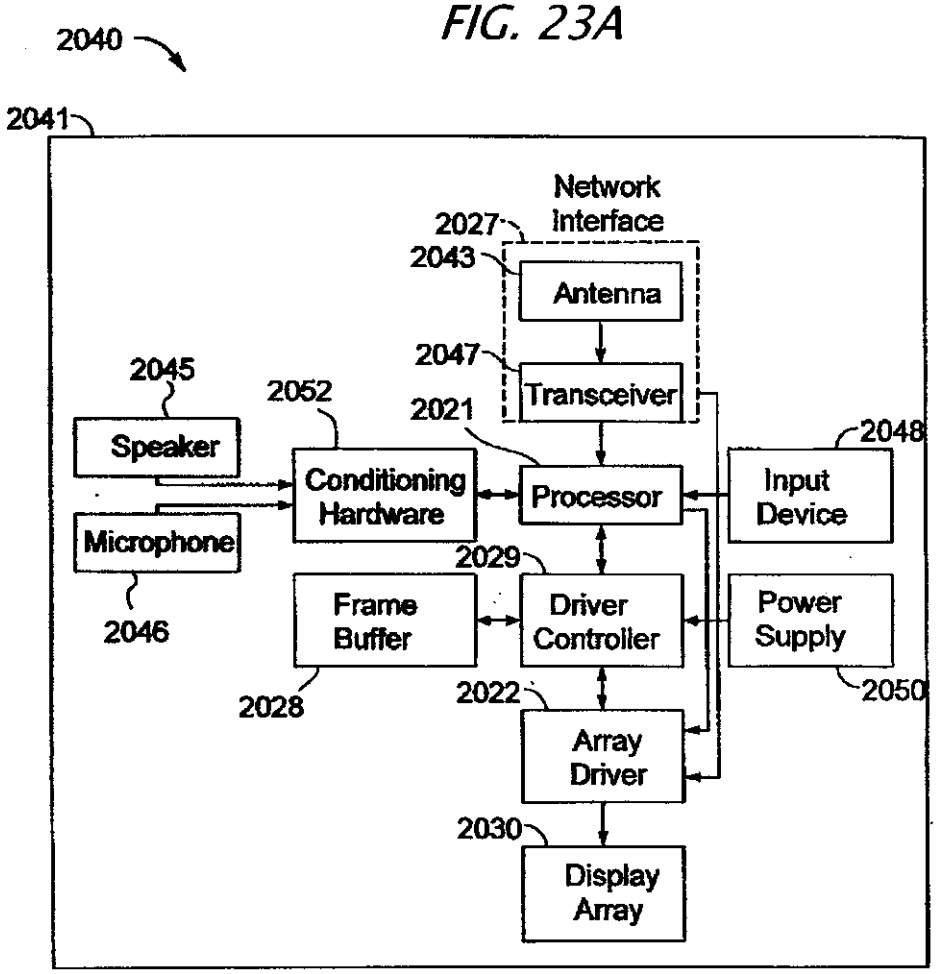

FIG. 23B