Figure 1A

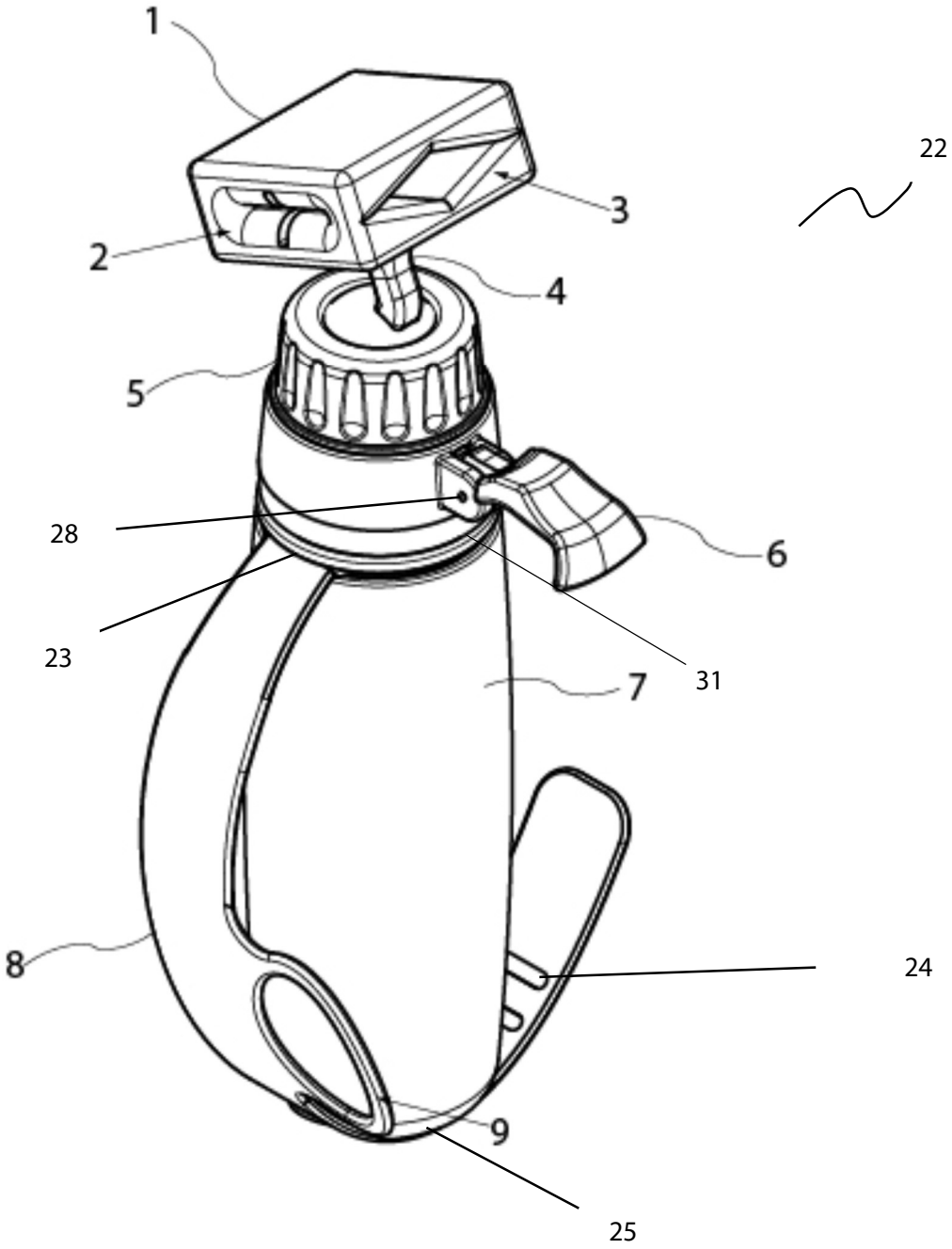

Figure 1B

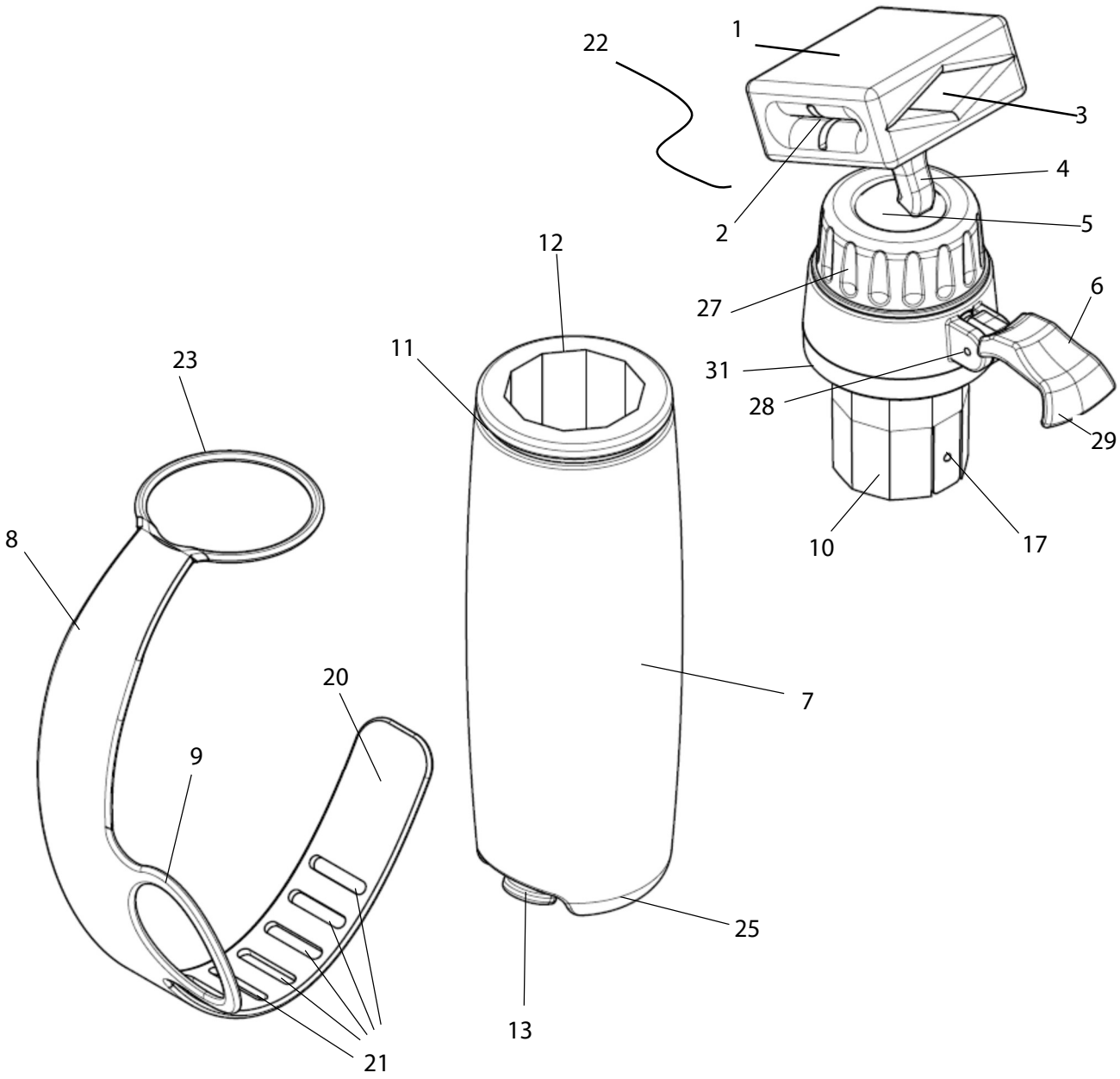

Figure 1C

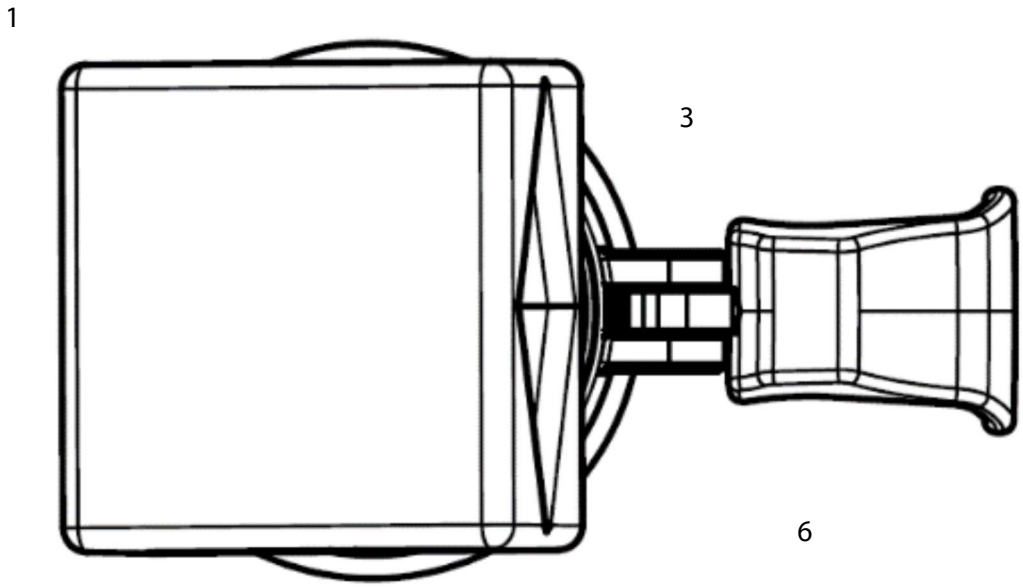

Figure 1D

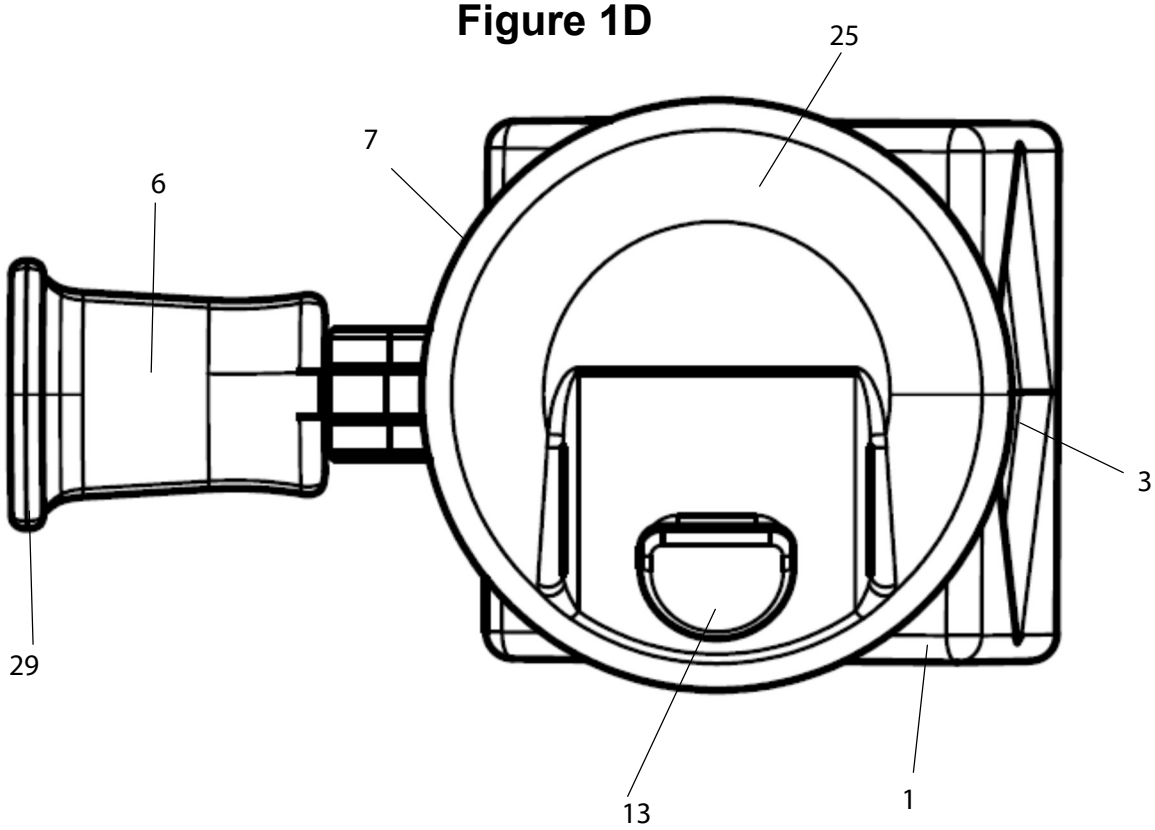

Figure 1E

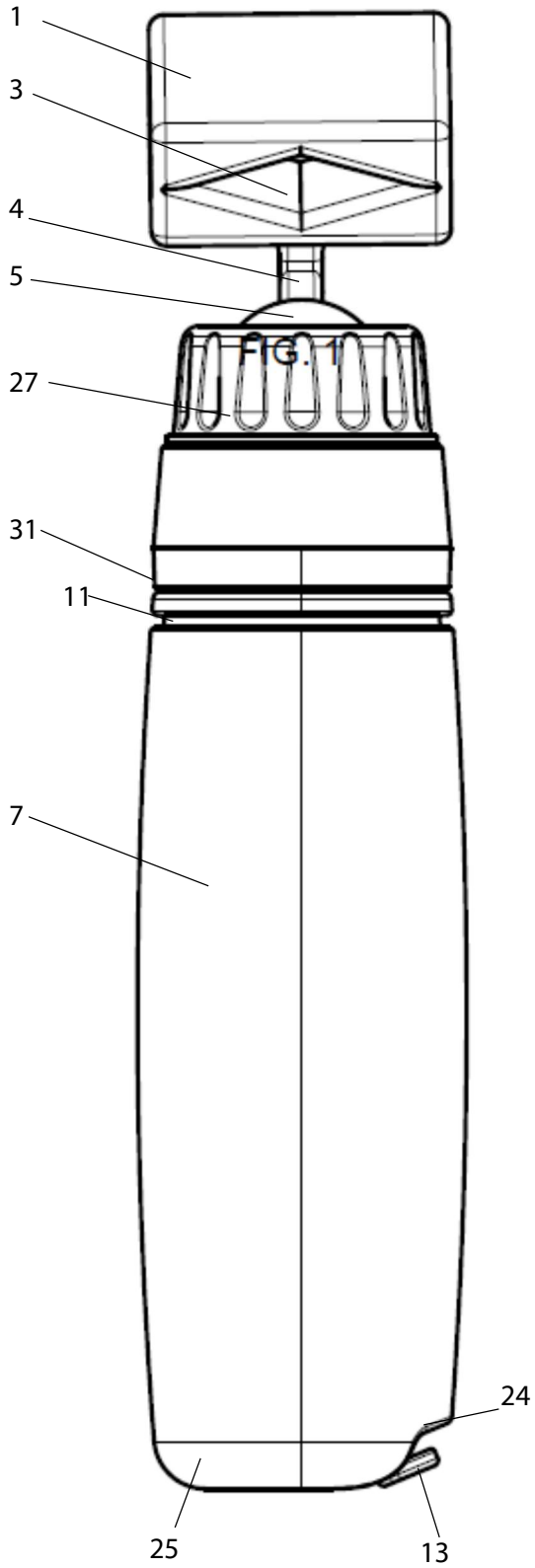

FIG. 1

Figure 1F

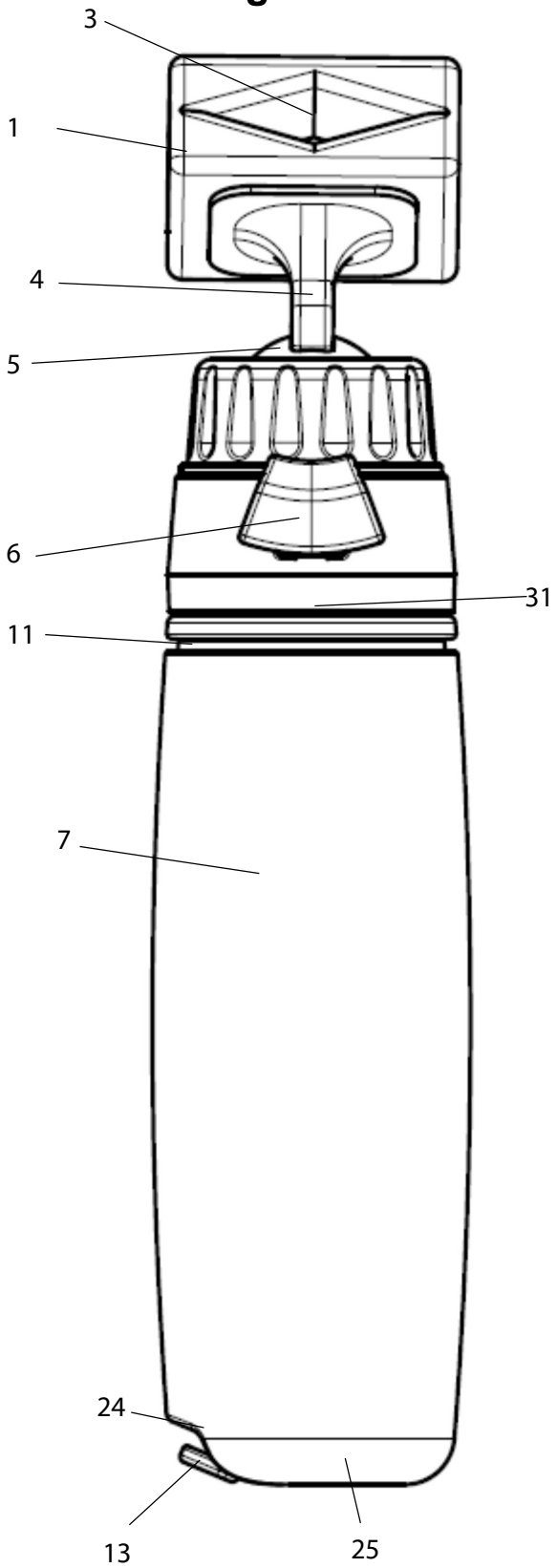

Figure 1G

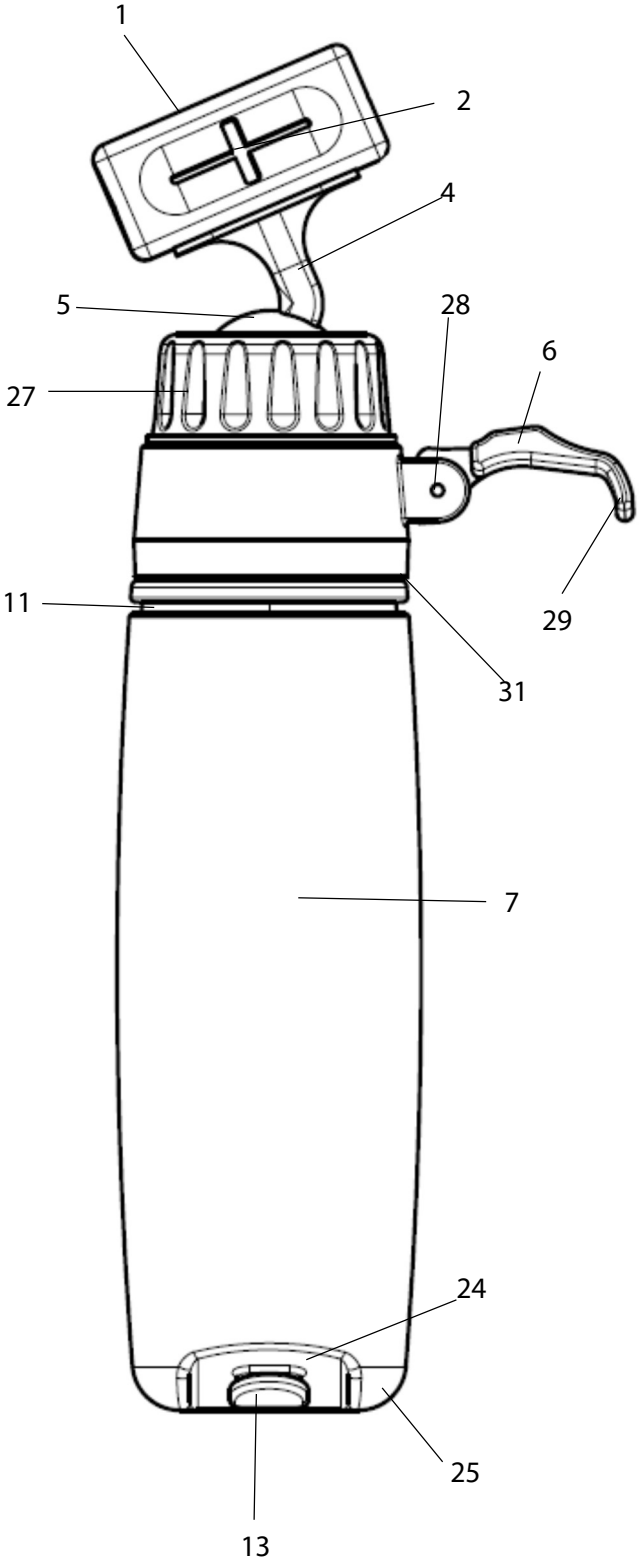

Figure 1H

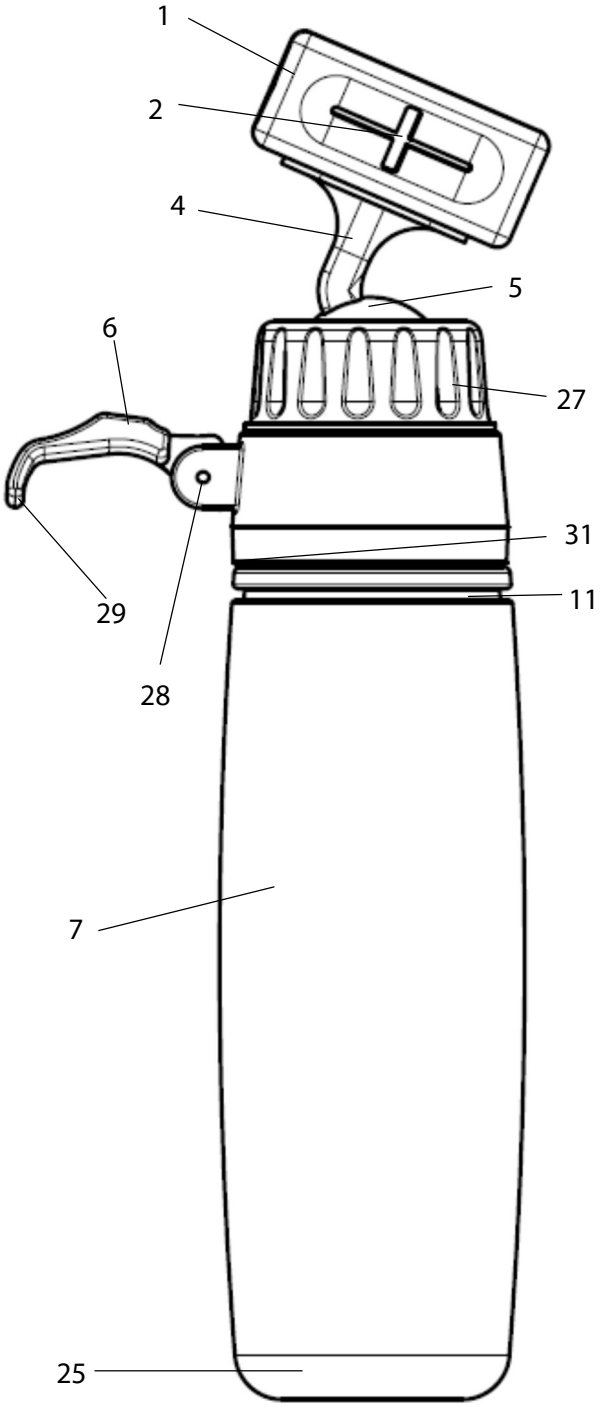

Figure 2A

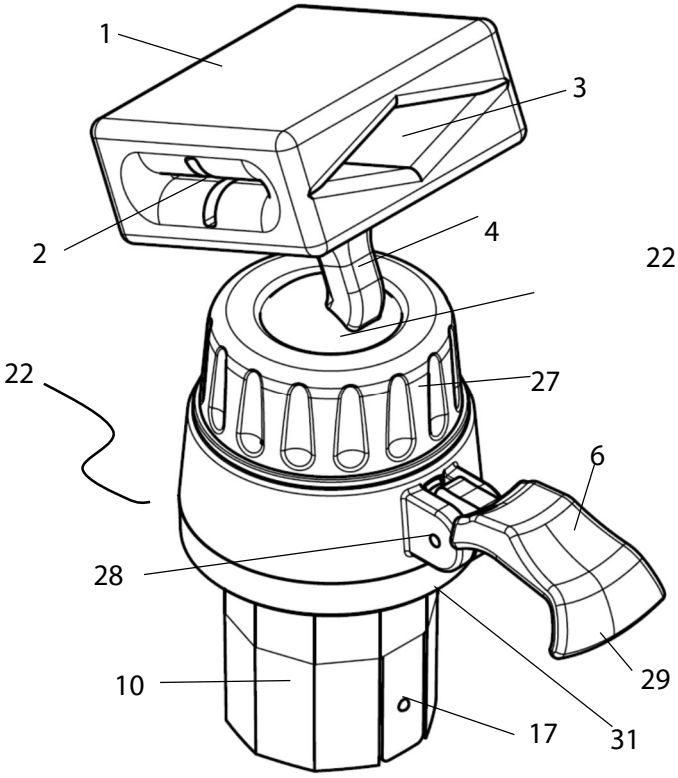

Figure 2B

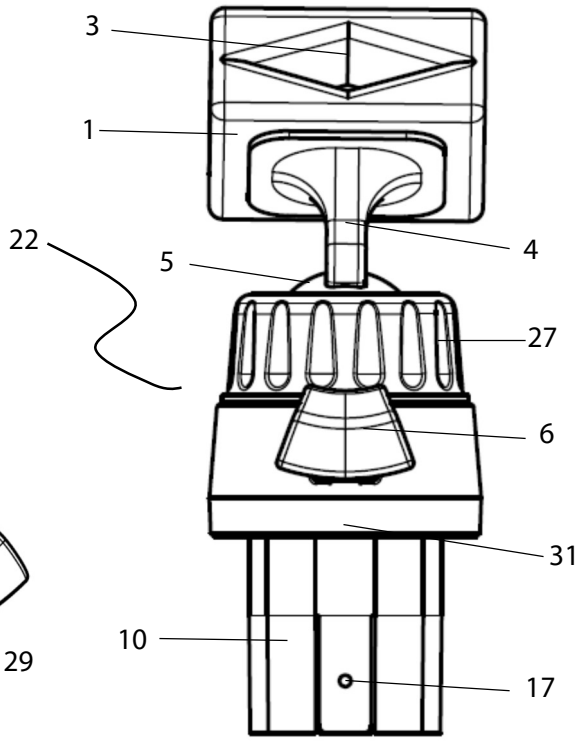

Figure 2C

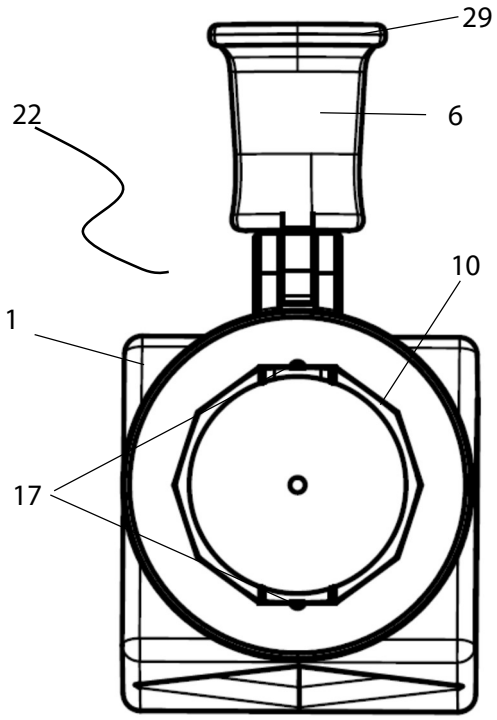

Figure 2D

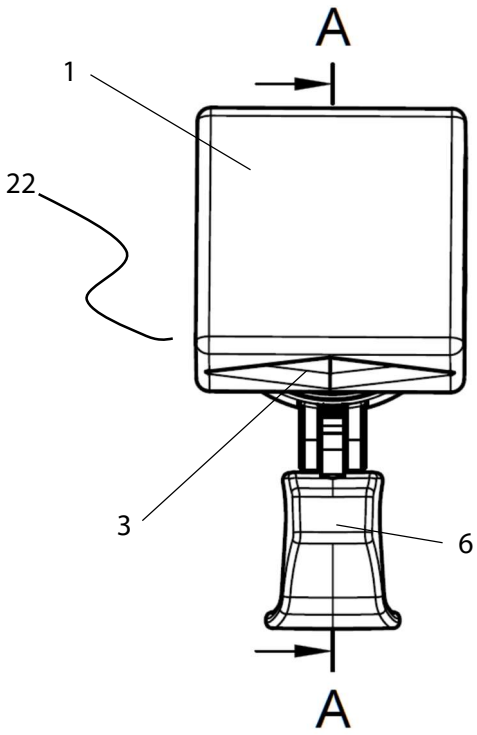

Figure 2E

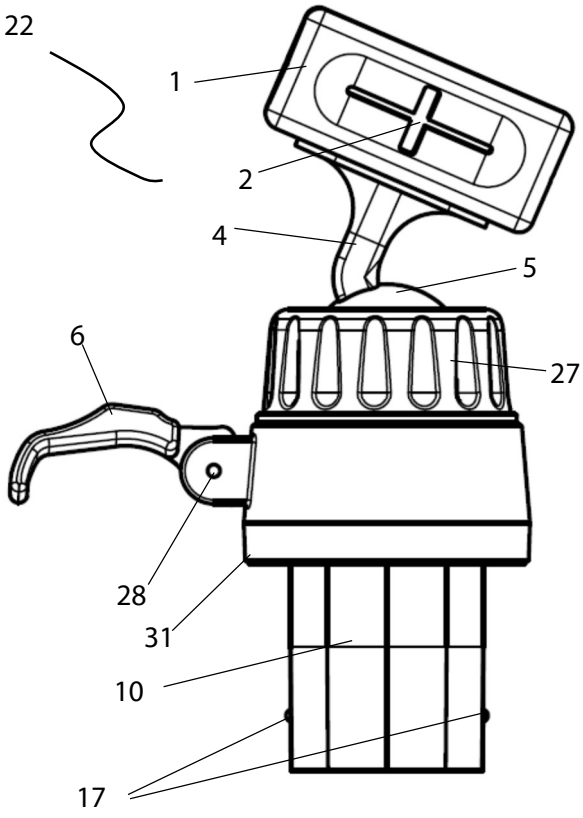

Figure 2F

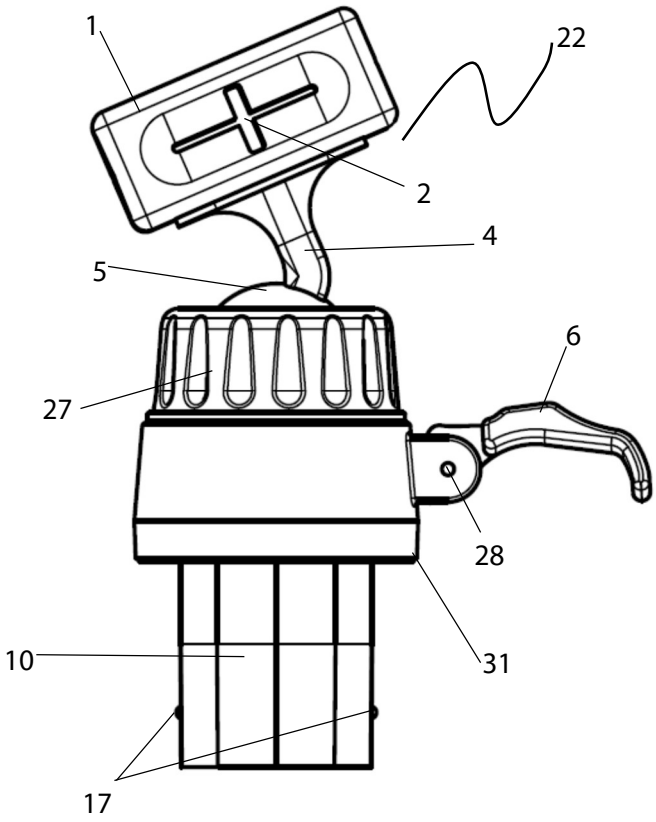

Figure 2G

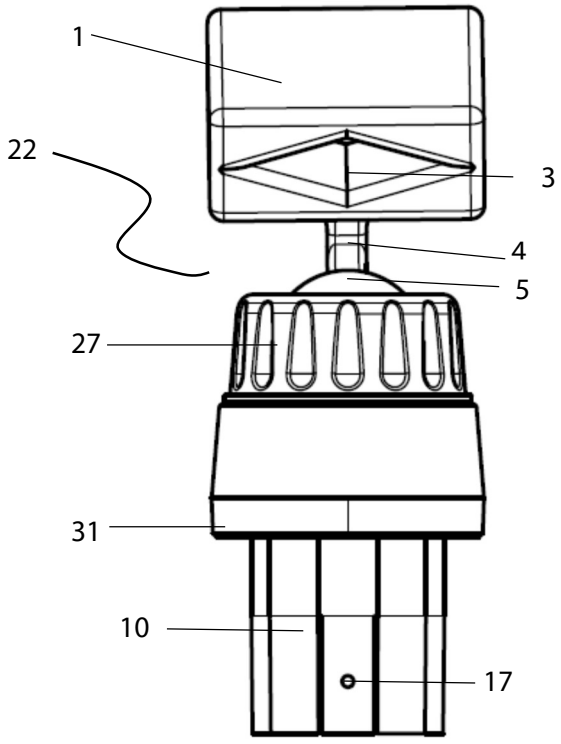

Figure 2H

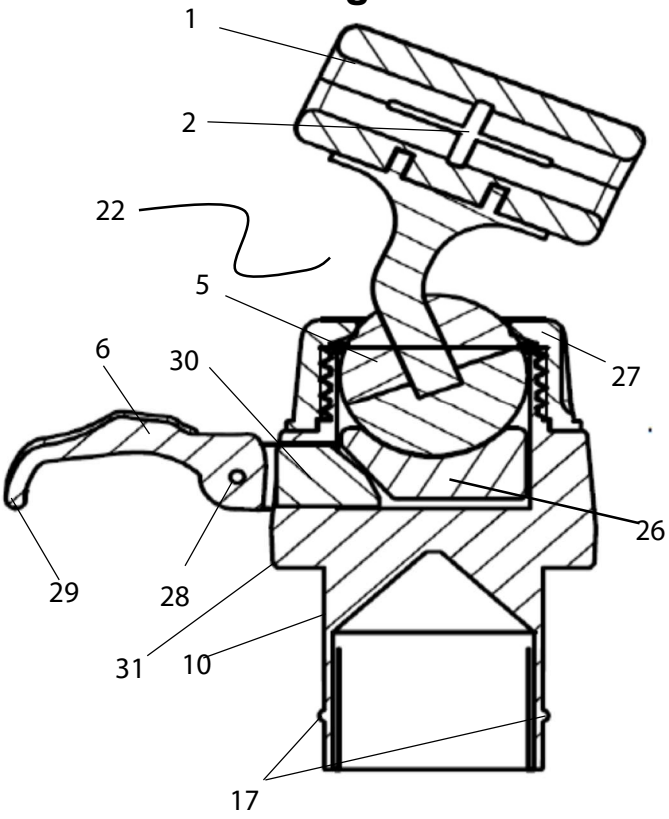

Figure 2I

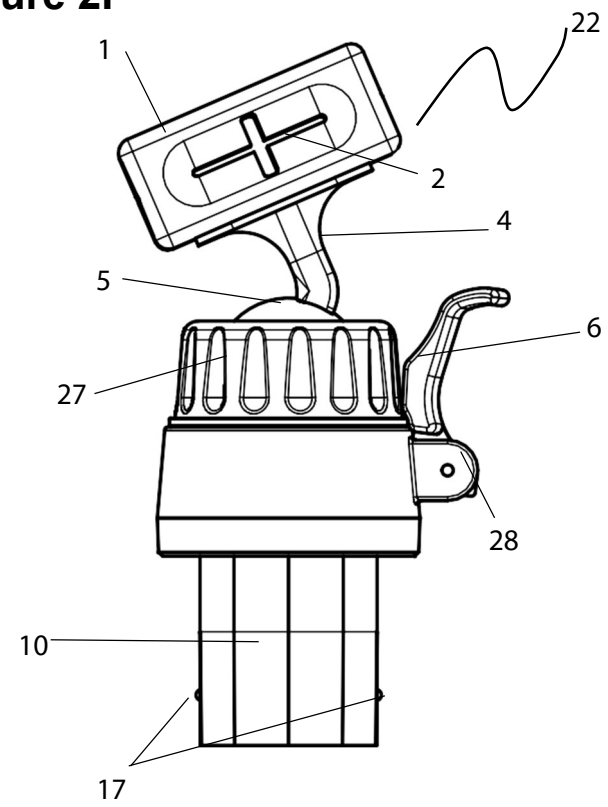

Figure 3A

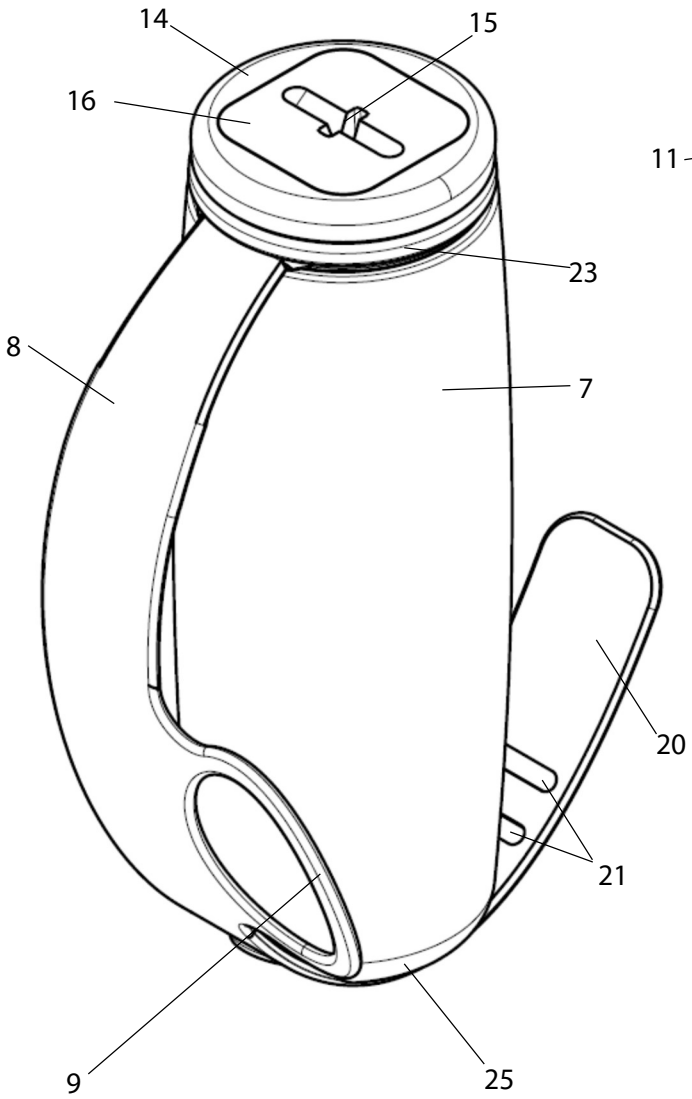

Figure 3B

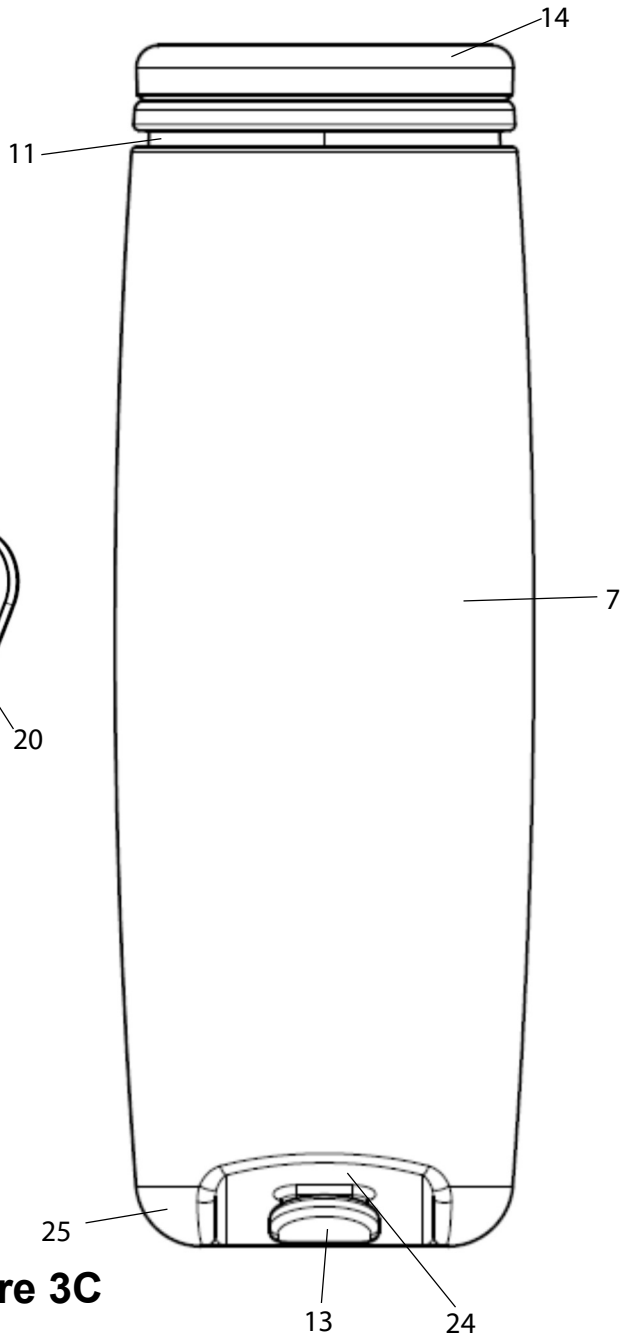

v

Figure 3C

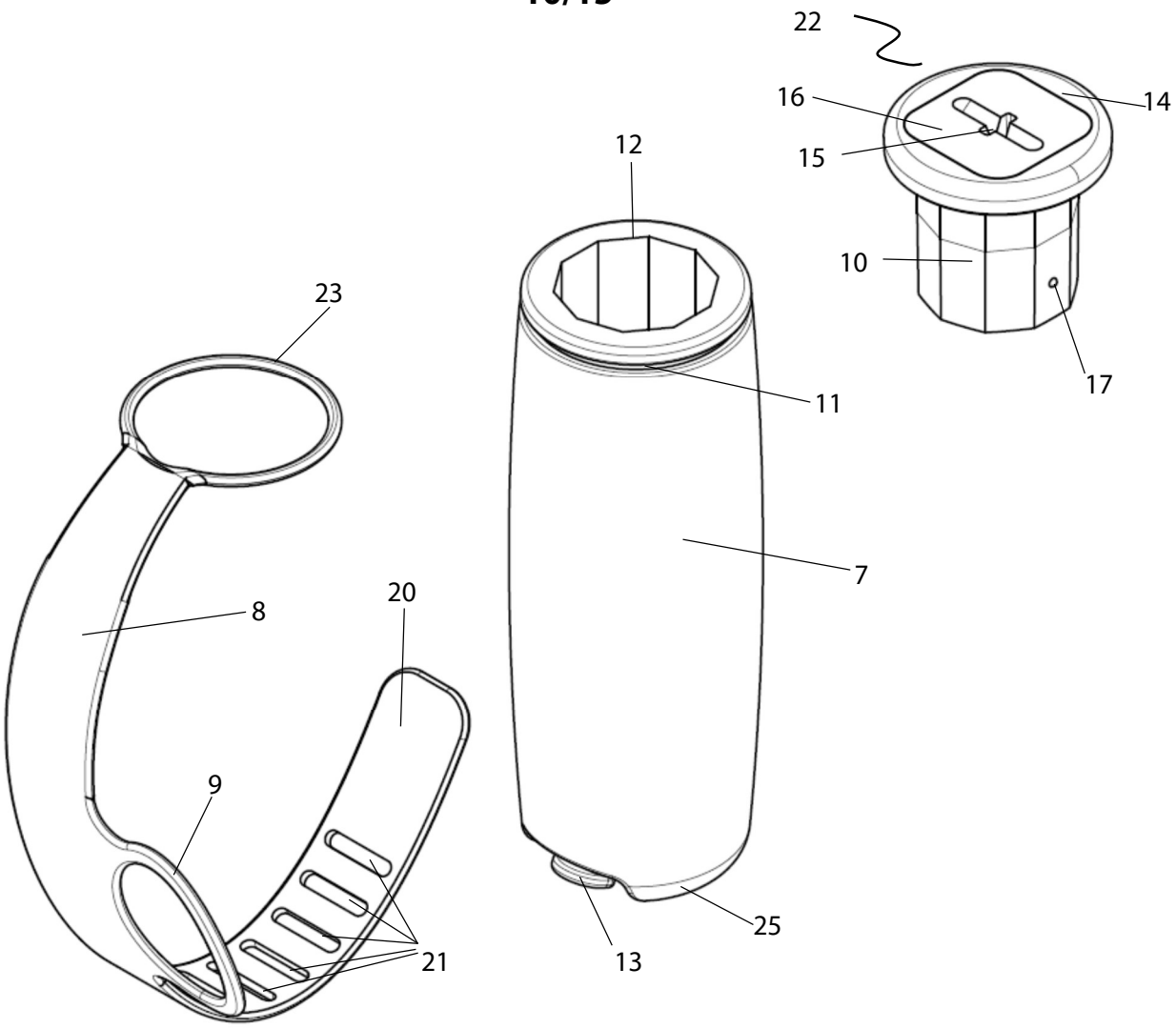

Figure 3D

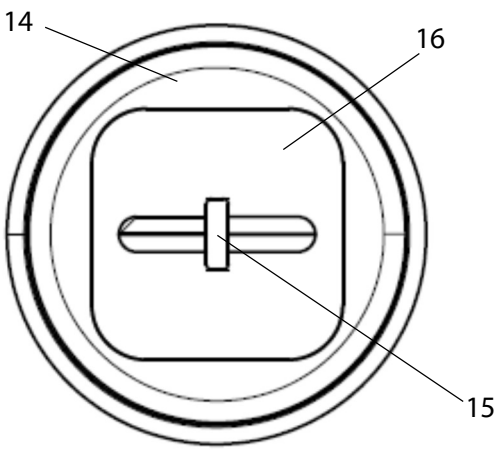

Figure 3E

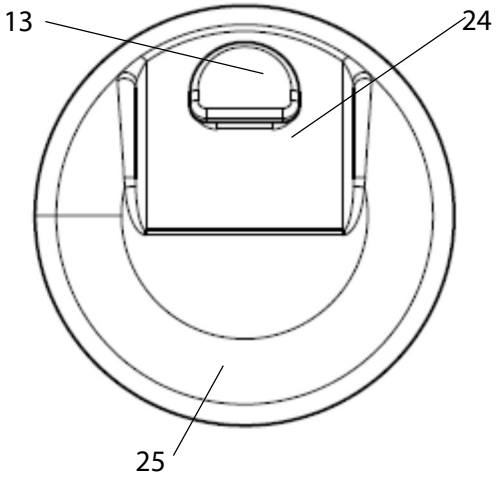

Figure 3F

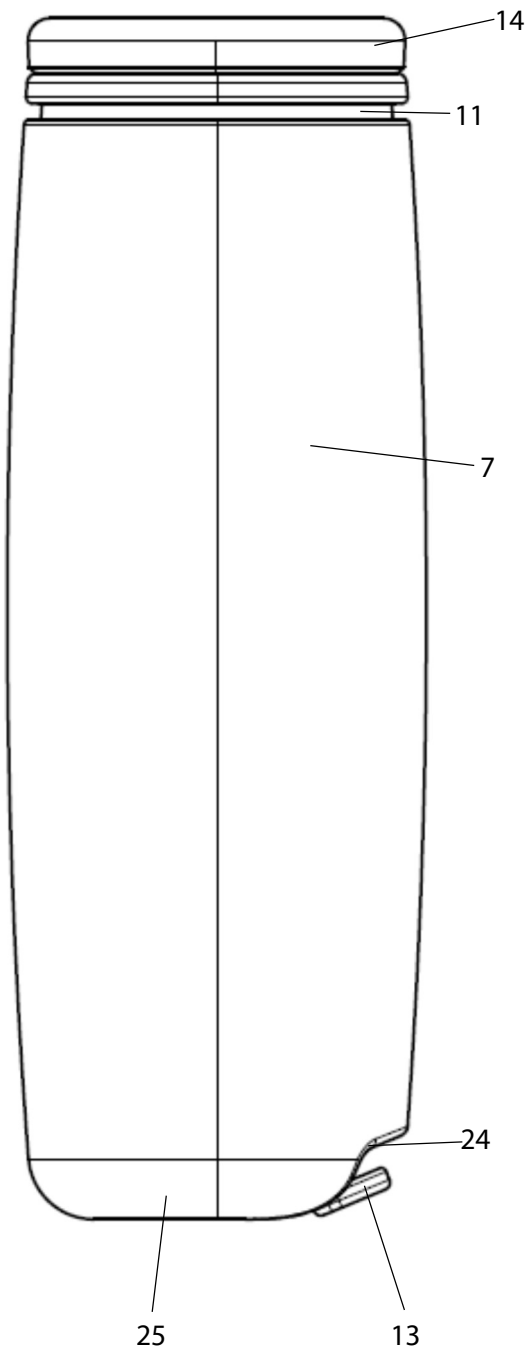

Figure 3G

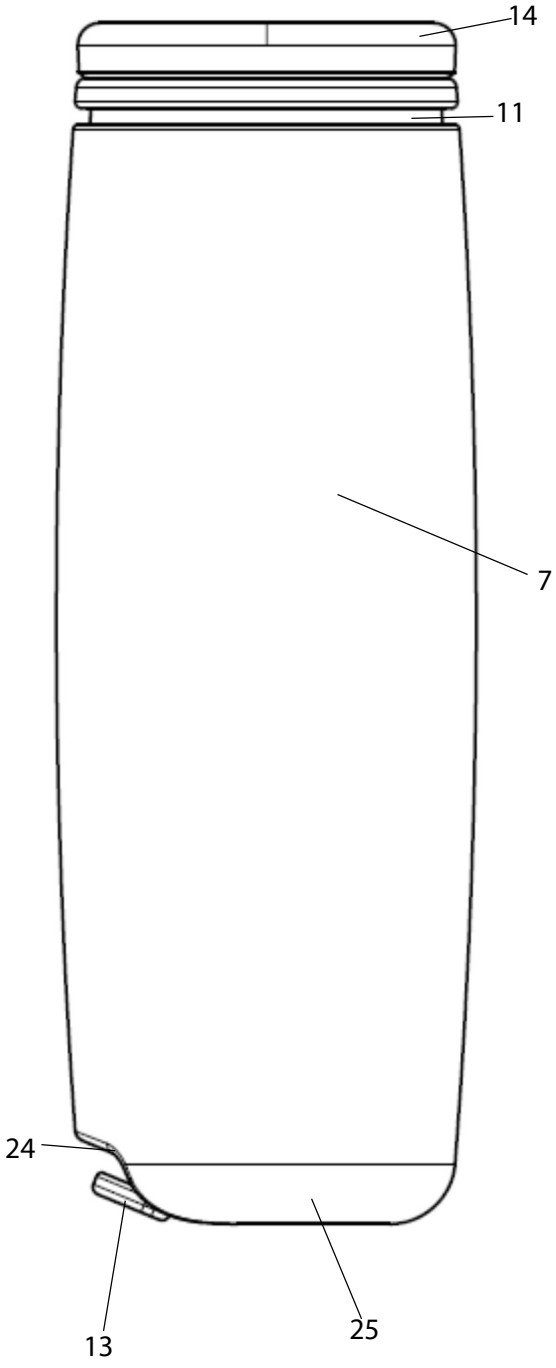

Figure 3H

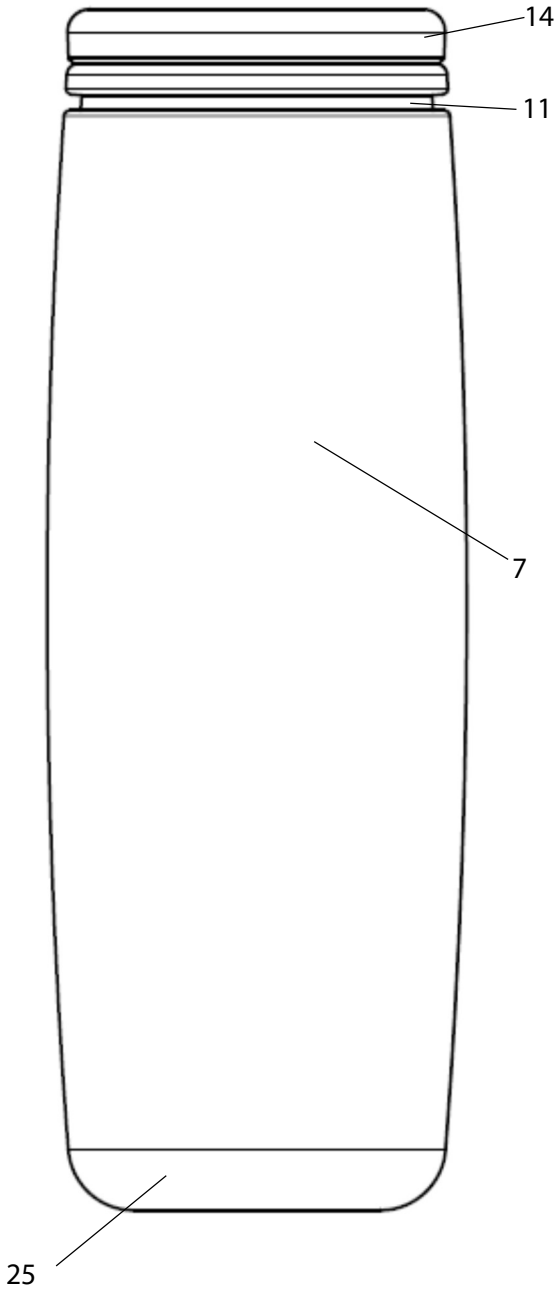

Figure 3I

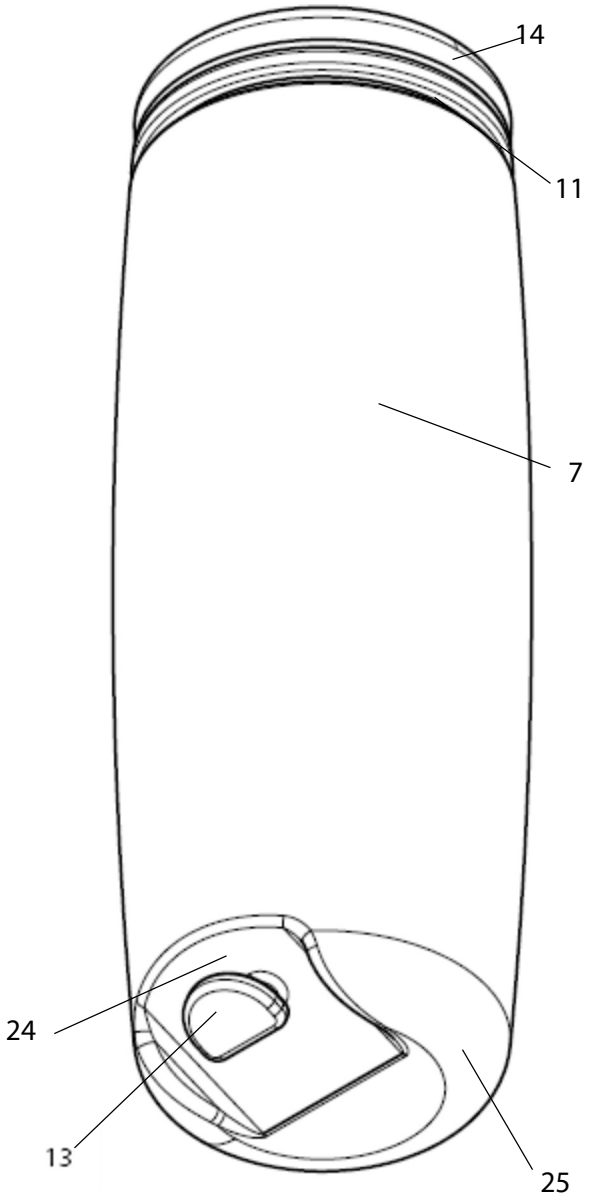

Figure 4A

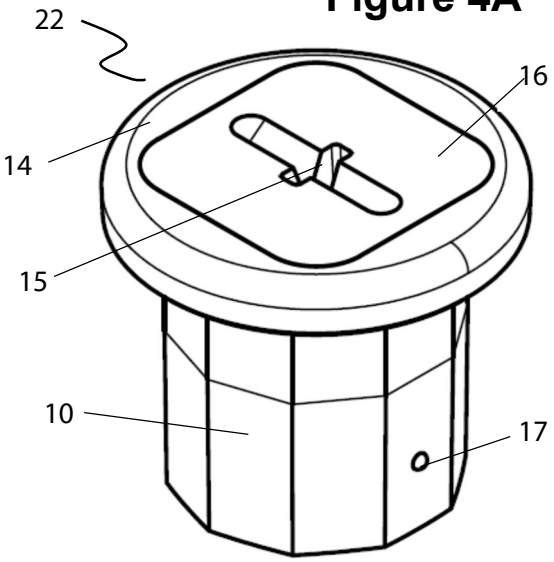

Figure 4B

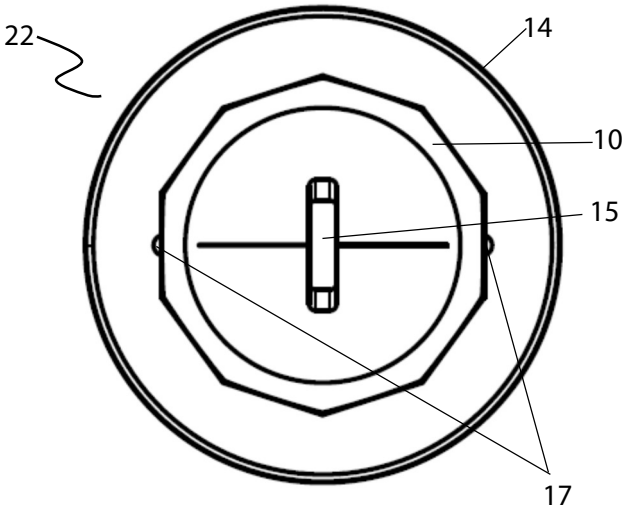

Figure 4C

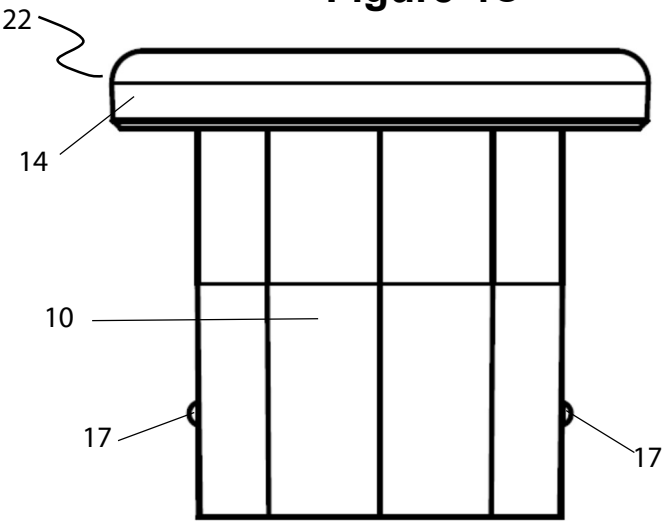

Figure 4D

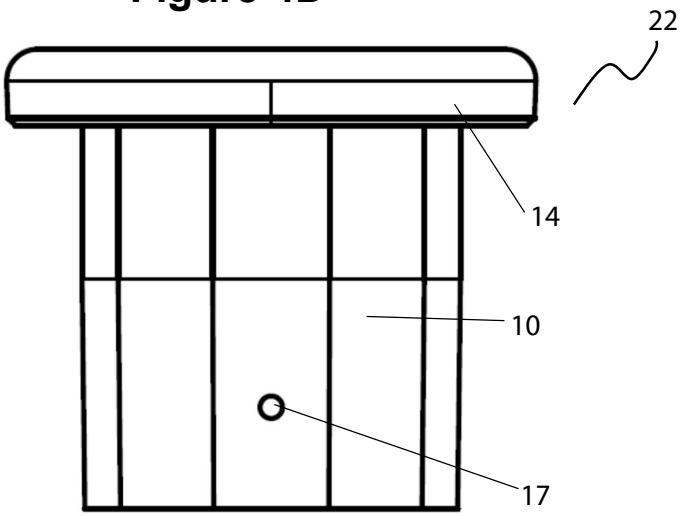

Figure 4E

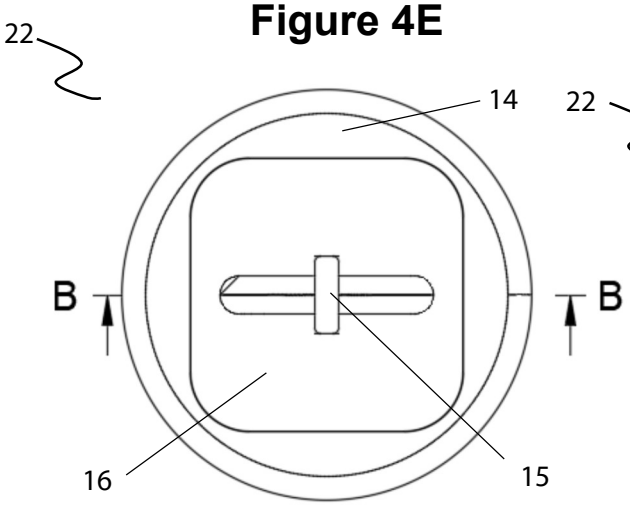

Figure 4F

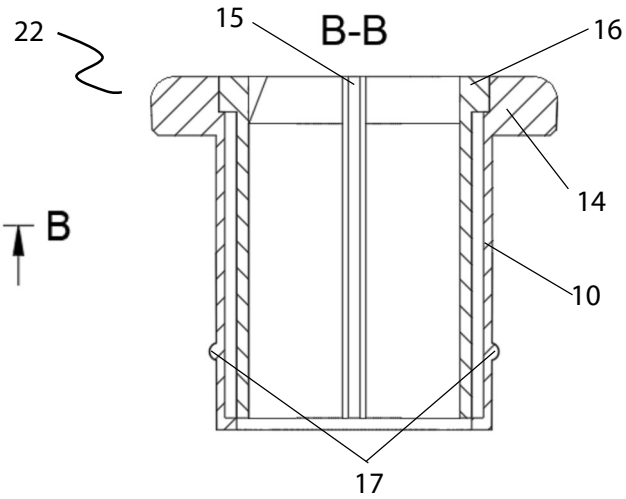

Figure 5A

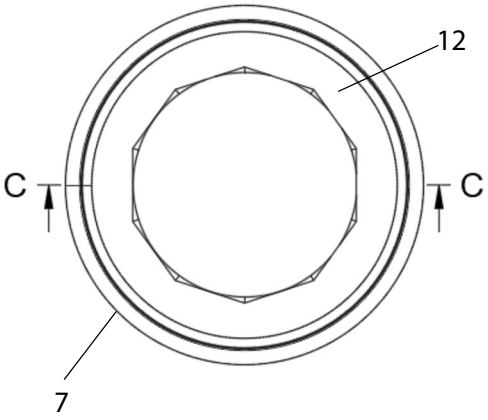

Figure 5B

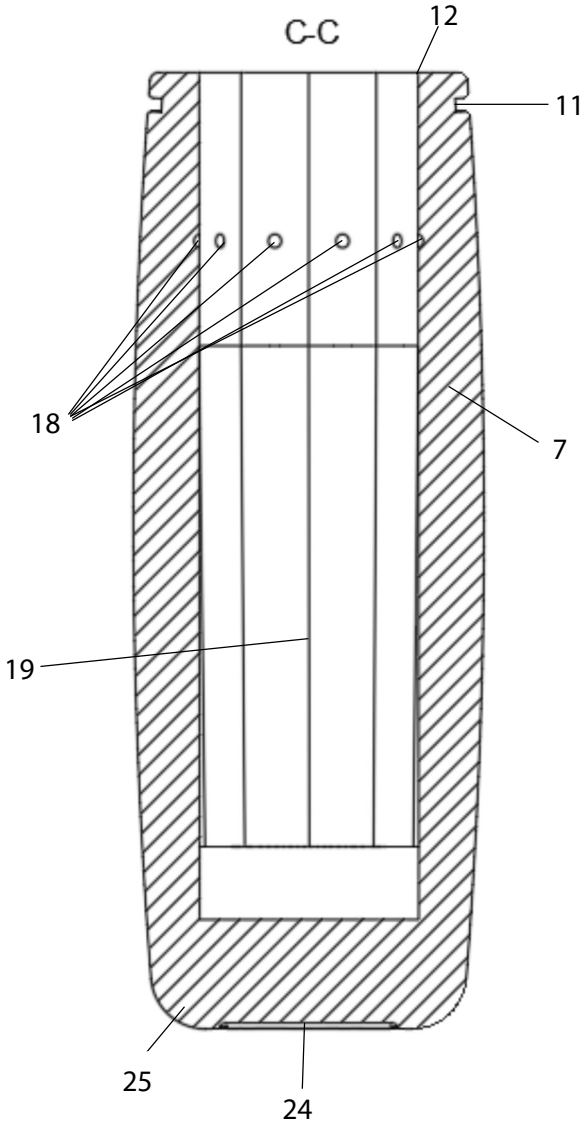

Figure 6A

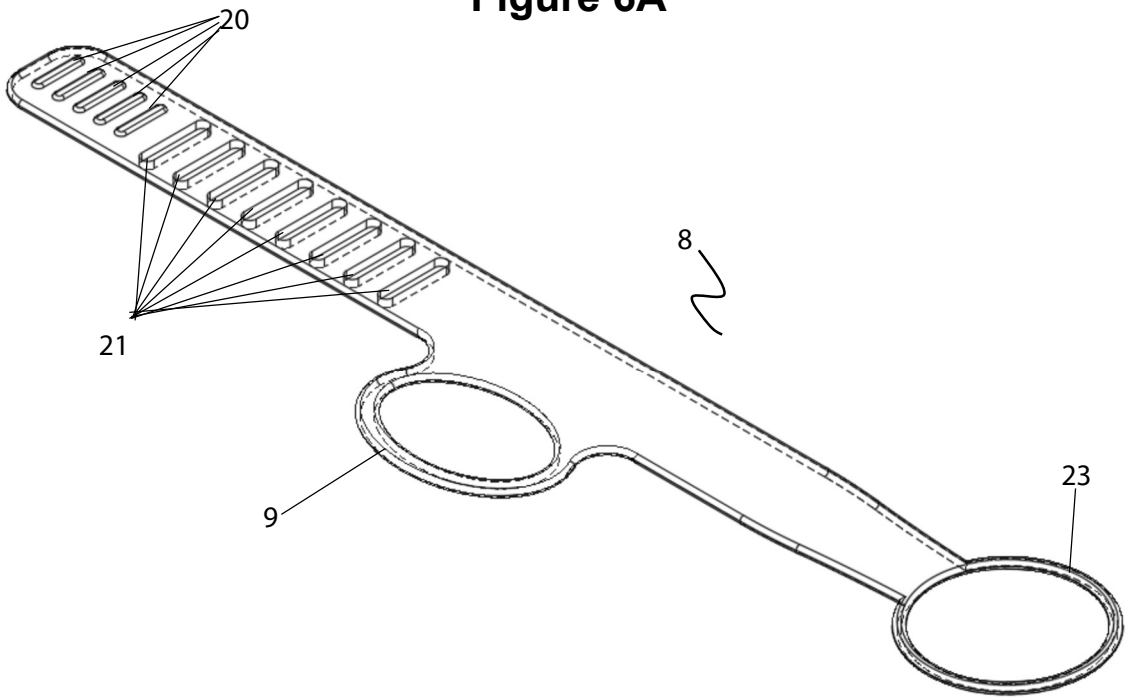

Figure 6B

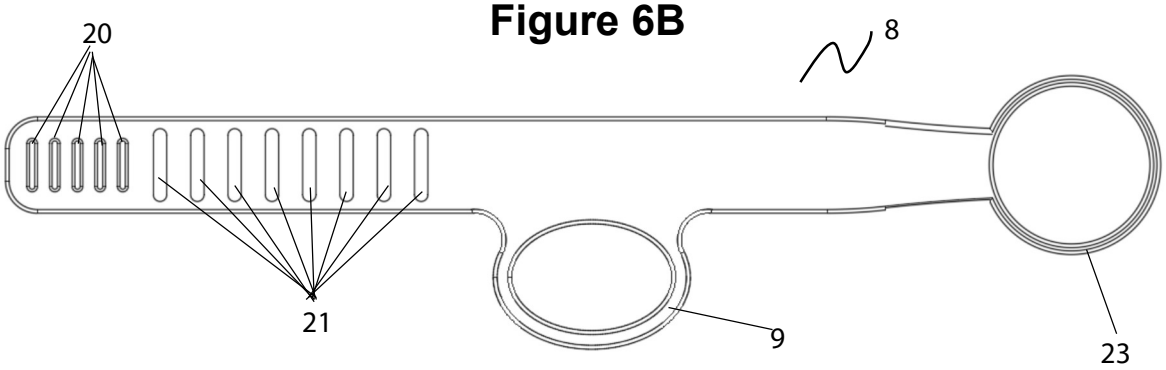

Figure 6C

