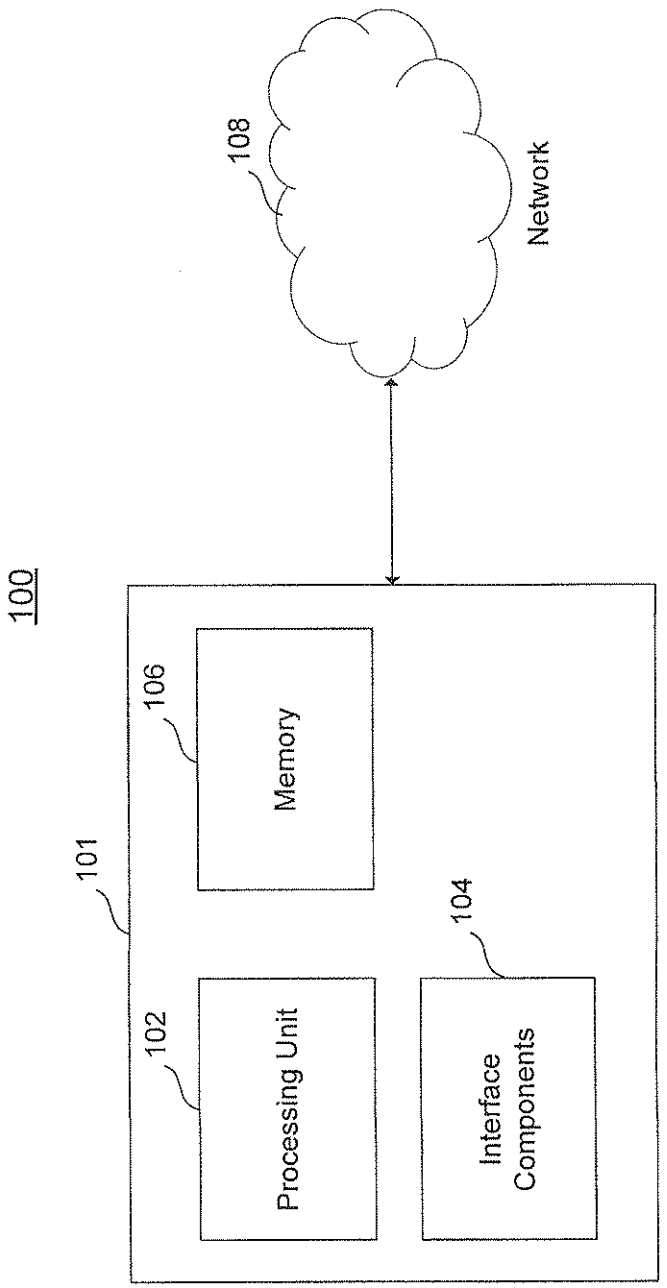
100
101
102
Processing Unit
104
Interface Components
106
Memory
108
Network

FIG. 1

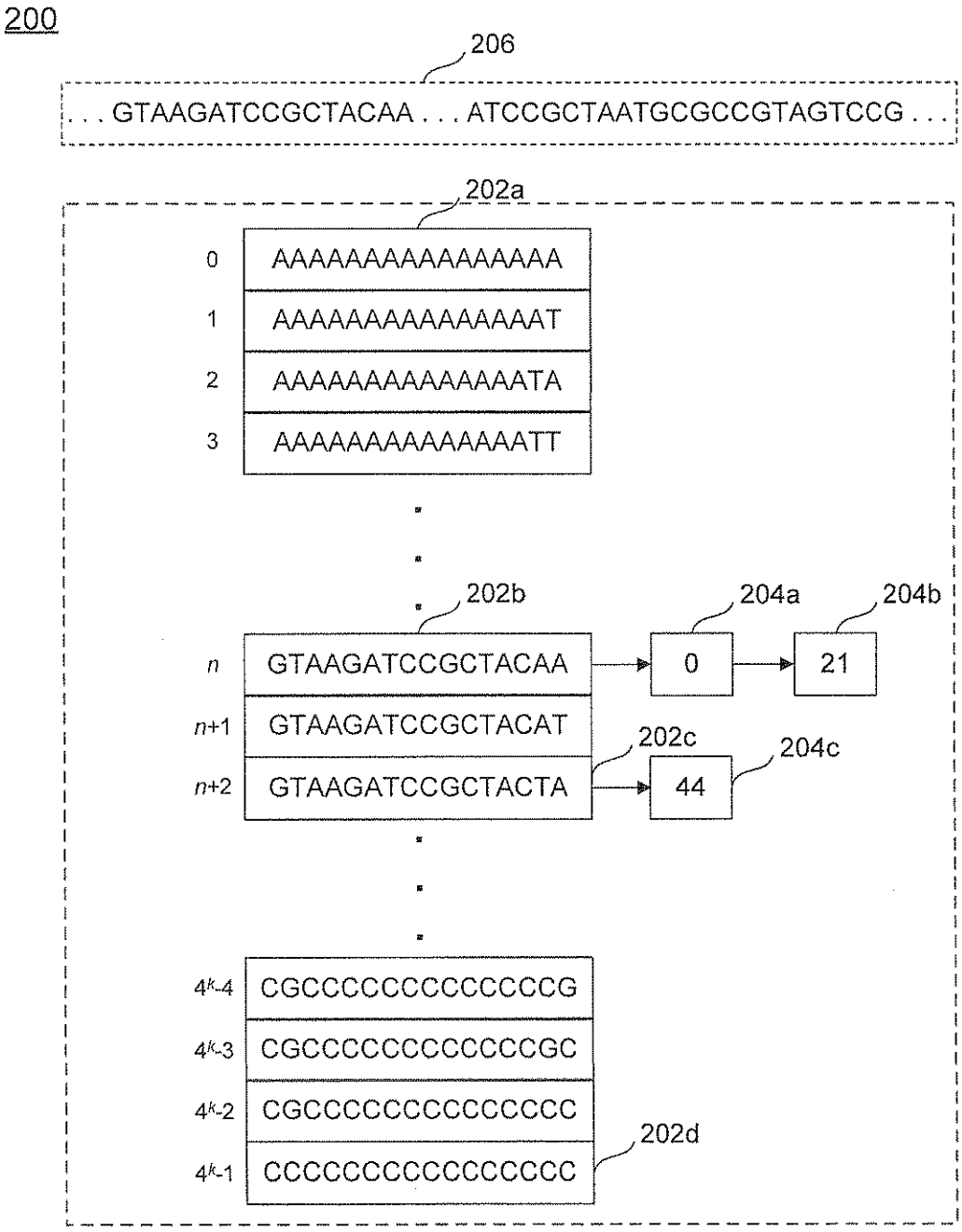
200
206
. . . GTAAGATCCGCTACAA . . . ATCCGCTAATGCGCCGTAGTCCG . . .
202a
0
AAAAAAAAAAAAAAAA
1
AAAAAAAAAAAAAAAT
2
AAAAAAAAAAAAAATA
3
AAAAAAAAAAAAAATT
202b
204a
204b
n
GTAAGATCCGCTACAA
0
21
n+1
GTAAGATCCGCTACAT
202c
204c
n+2
GTAAGATCCGCTACTA
44
4k-4
CGCCCCCCCCCCCCCG
4k-3
CGCCCCCCCCCCCCGC
4k-2
CGCCCCCCCCCCCCCC
202d
4k-1
CCCCCCCCCCCCCCCC

FIG. 2

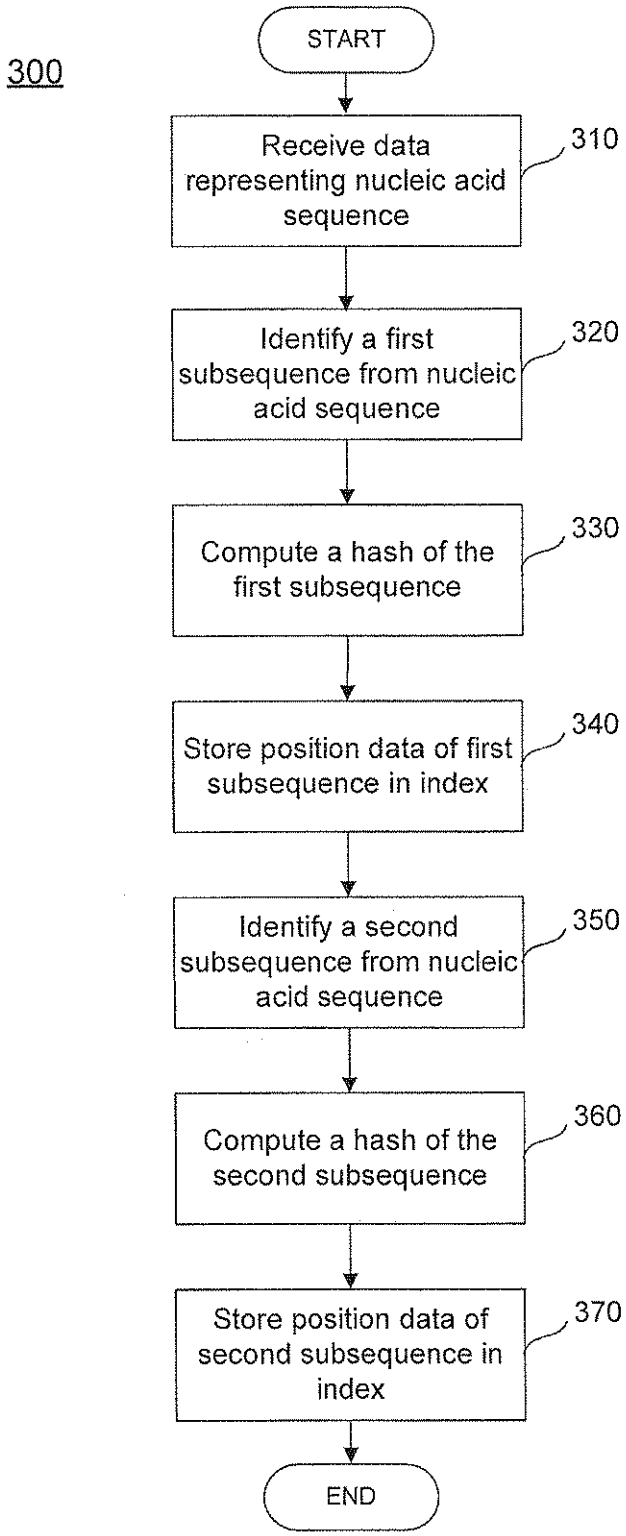
300
START
Receive data representing nucleic acid sequence
310
Identify a first subsequence from nucleic acid sequence
320
Compute a hash of the first subsequence
330
Store position data of first subsequence in index
340
Identify a second subsequence from nucleic acid sequence
350
Compute a hash of the second subsequence
360
Store position data of second subsequence in index
370
END

FIG. 3

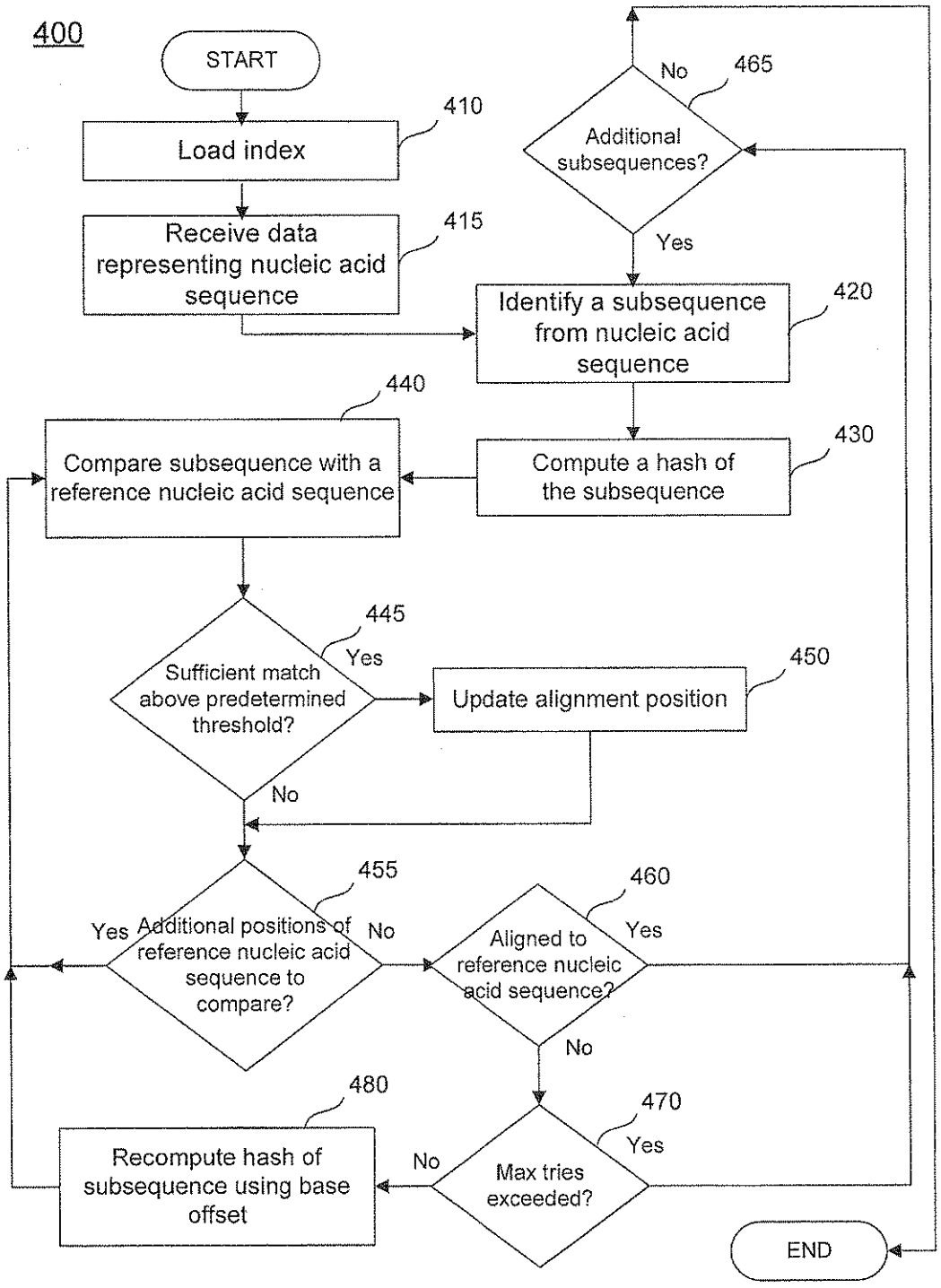
400
START
Load index
410
Receive data representing nucleic acid sequence
415
Identify a subsequence from nucleic acid sequence
420
Compute a hash of the subsequence
430
Compare subsequence with a reference nucleic acid sequence
440
Sufficient match above predetermined threshold?
445
Yes
No
Update alignment position
450
Additional positions of reference nucleic acid sequence to compare?
455
Yes
No
Aligned to reference nucleic acid sequence?
460
Yes
No
Max tries exceeded?
470
Yes
No
Recompute hash of subsequence using base offset
480
Additional subsequences?
465
No
Yes
END

FIG. 4

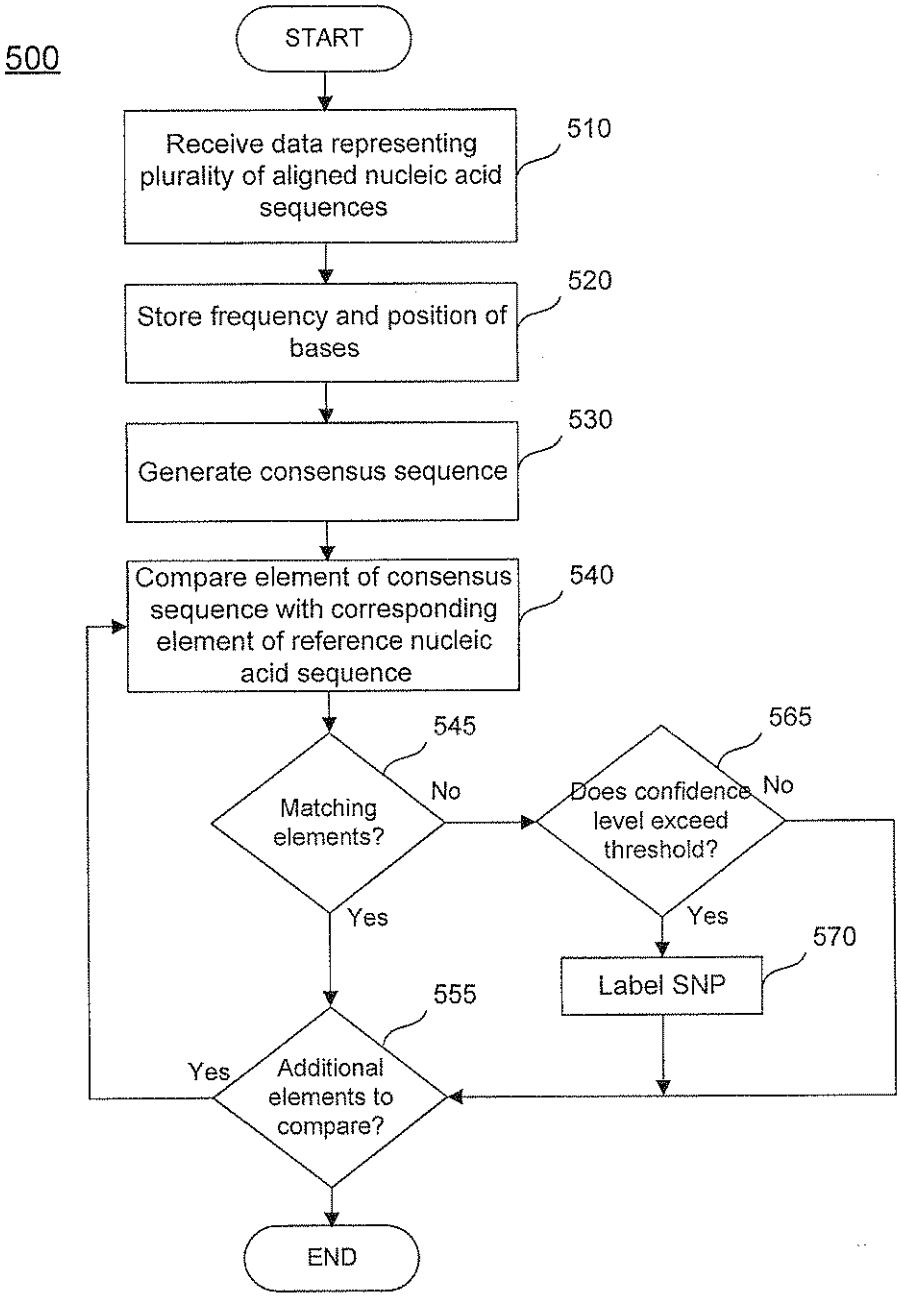
500
START
Receive data representing plurality of aligned nucleic acid sequences
510
Store frequency and position of bases
520
Generate consensus sequence
530
Compare element of consensus sequence with corresponding element of reference nucleic acid sequence
540
Matching elements?
545
No
Yes
Does confidence level exceed threshold?
565
No
Yes
Label SNP
570
Additional elements to compare?
555
Yes
END

FIG. 5

600

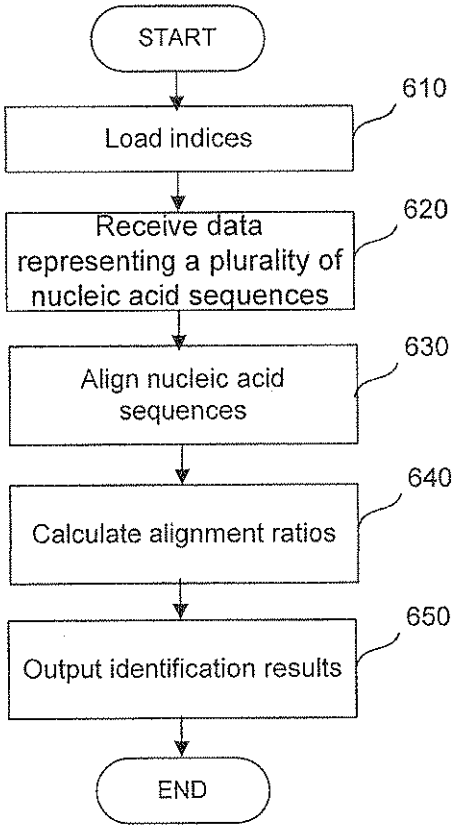
START
610
Load indices
620
Receive data representing a plurality of nucleic acid sequences
630
Align nucleic acid sequences
640
Calculate alignment ratios
650
Output identification results
END

FIG. 6