FIG.1

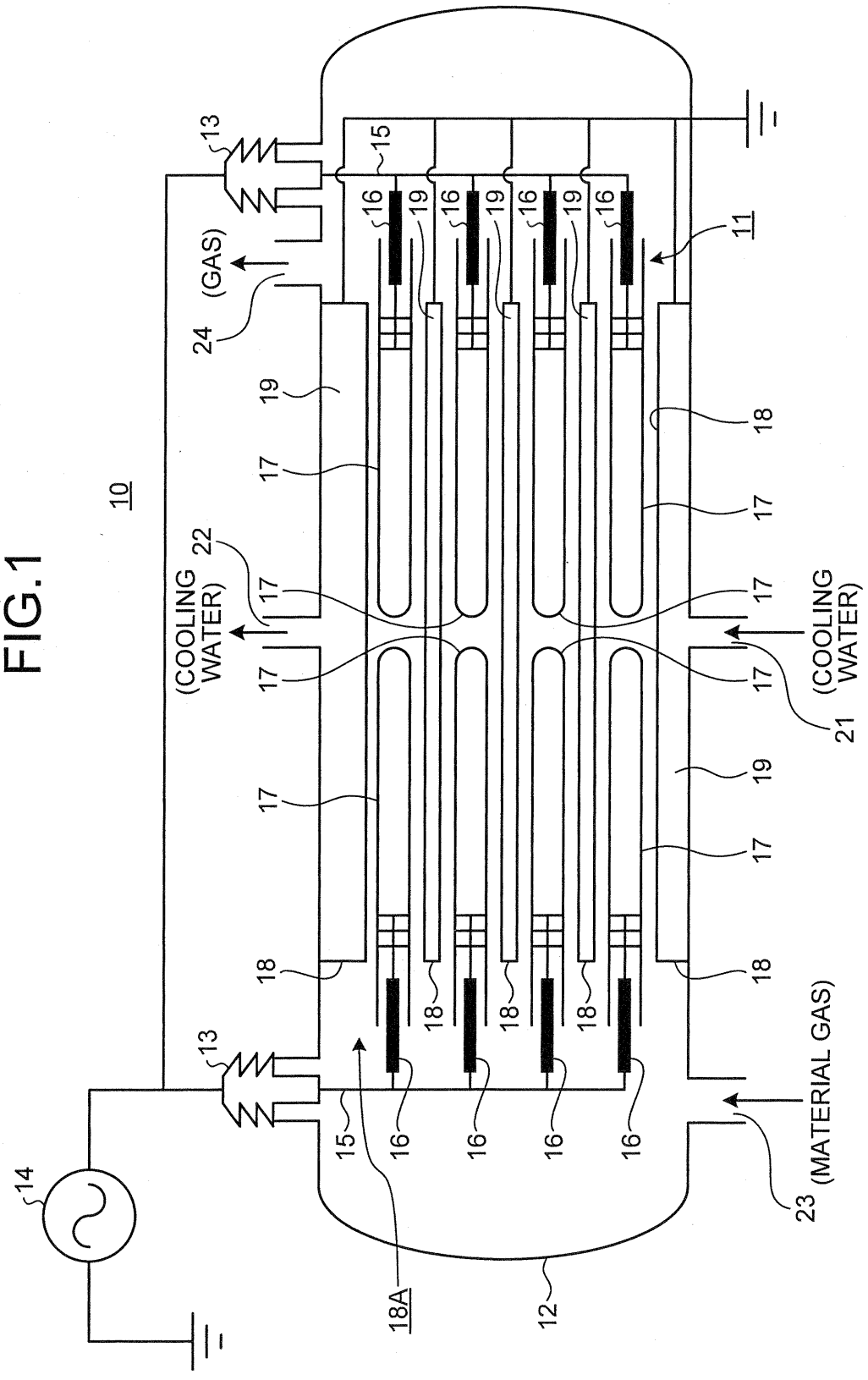
10
11
12
13
14
15
16
17
18
18A
19
21
22
23
24
(GAS)
(COOLING WATER)
(COOLING WATER)
(MATERIAL GAS)

FIG.7A

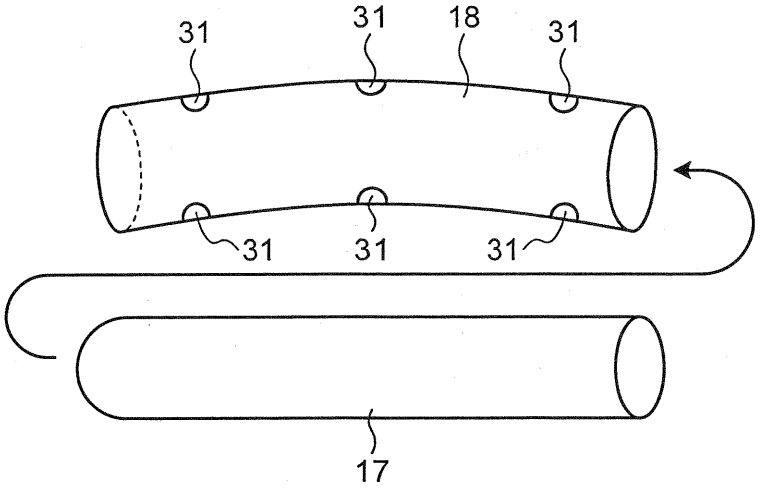


FIG.7B

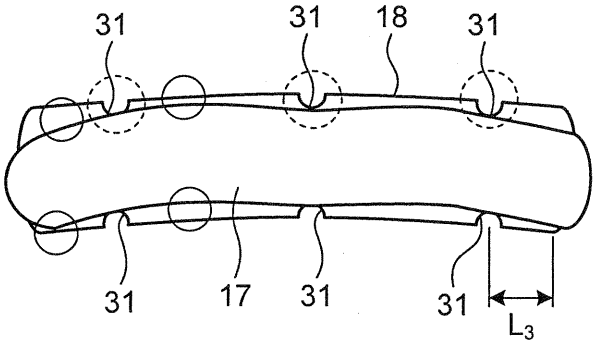

FIG.10A

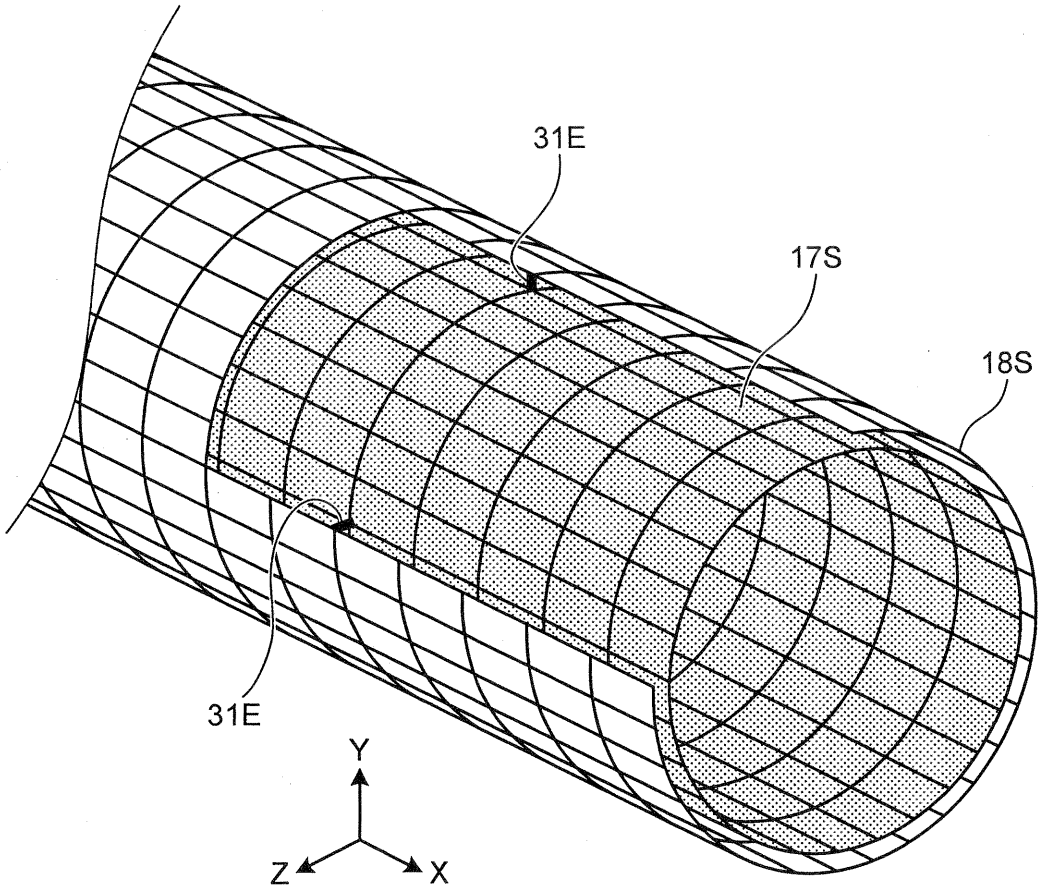


FIG.10B

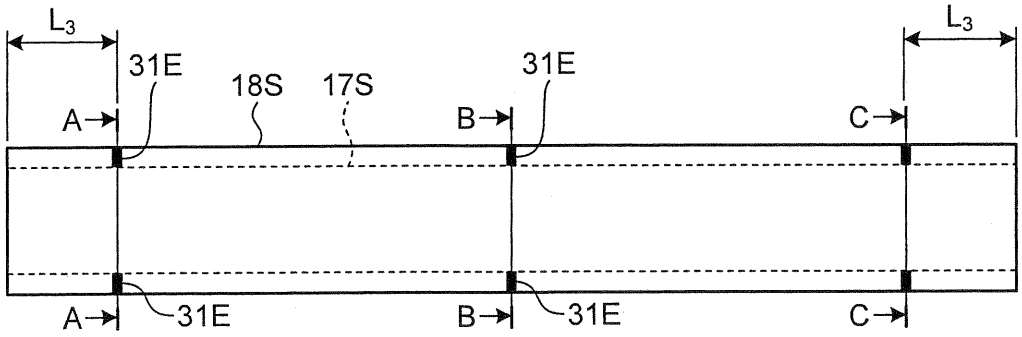

FIG.14

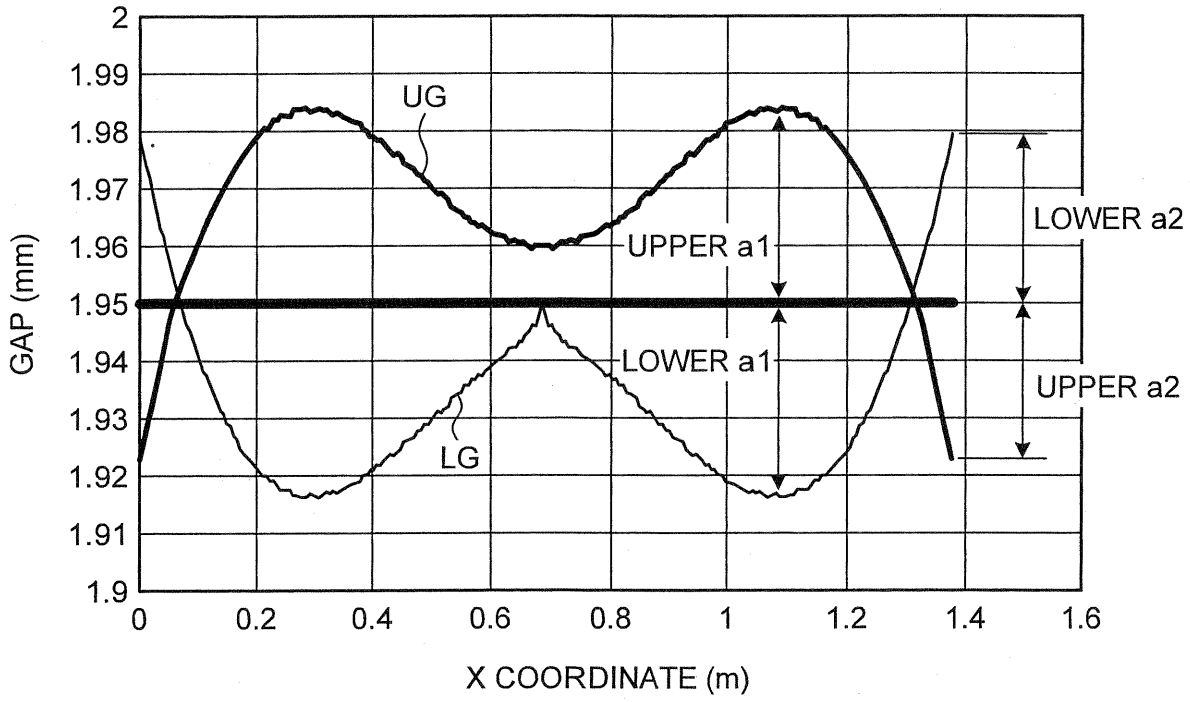
2
1.99
1.98
1.97
1.96
1.95
1.94
1.93
1.92
1.91
1.9
GAP (mm)
UG
UPPER a1
LOWER a1
LG
LOWER a2
UPPER a2
0
0.2
0.4
0.6
0.8
1
1.2
1.4
1.6
X COORDINATE (m)

FIG.15

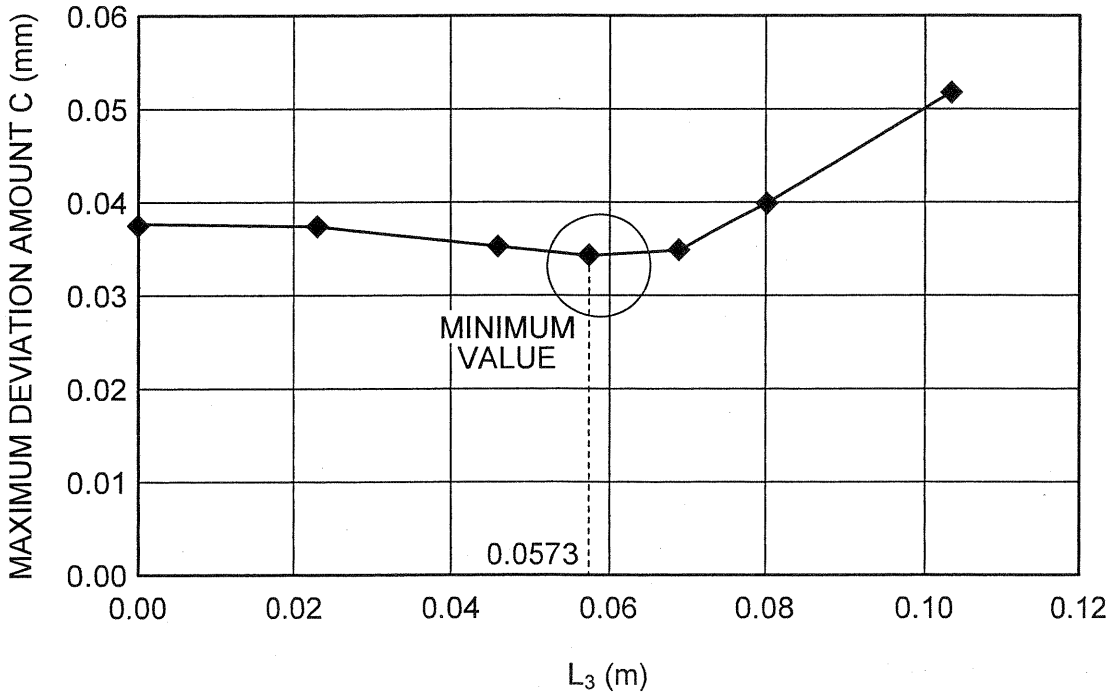
0.06
0.05
0.04
0.03
0.02
0.01
0.00
MAXIMUM DEVIATION AMOUNT C (mm)
MINIMUM VALUE
0.0573
0.00
0.02
0.04
0.06
0.08
0.10
0.12
L3 (m)

FIG.16

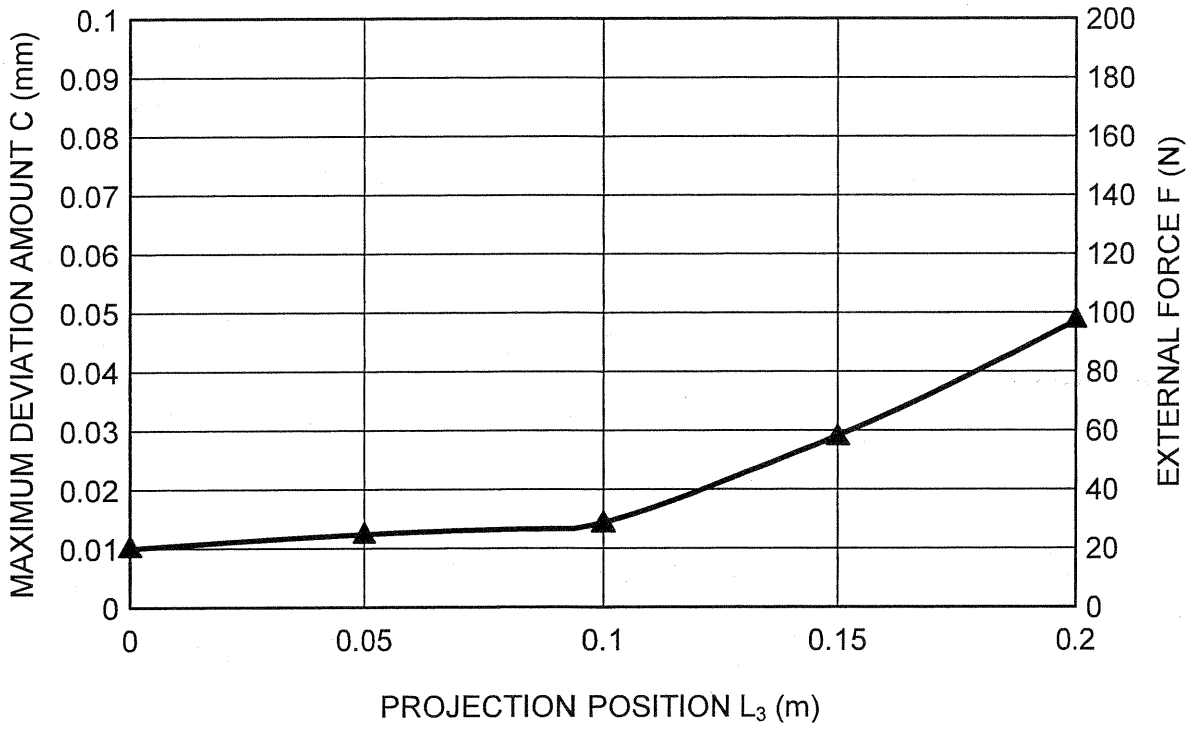
MAXIMUM DEVIATION AMOUNT C (mm)
0.1
0.09
0.08
0.07
0.06
0.05
0.04
0.03
0.02
0.01
0
EXTERNAL FORCE F (N)
200
180
160
140
120
100
80
60
40
20
0
0
0.05
0.1
0.15
0.2
PROJECTION POSITION $L_3$ (m)

FIG.20

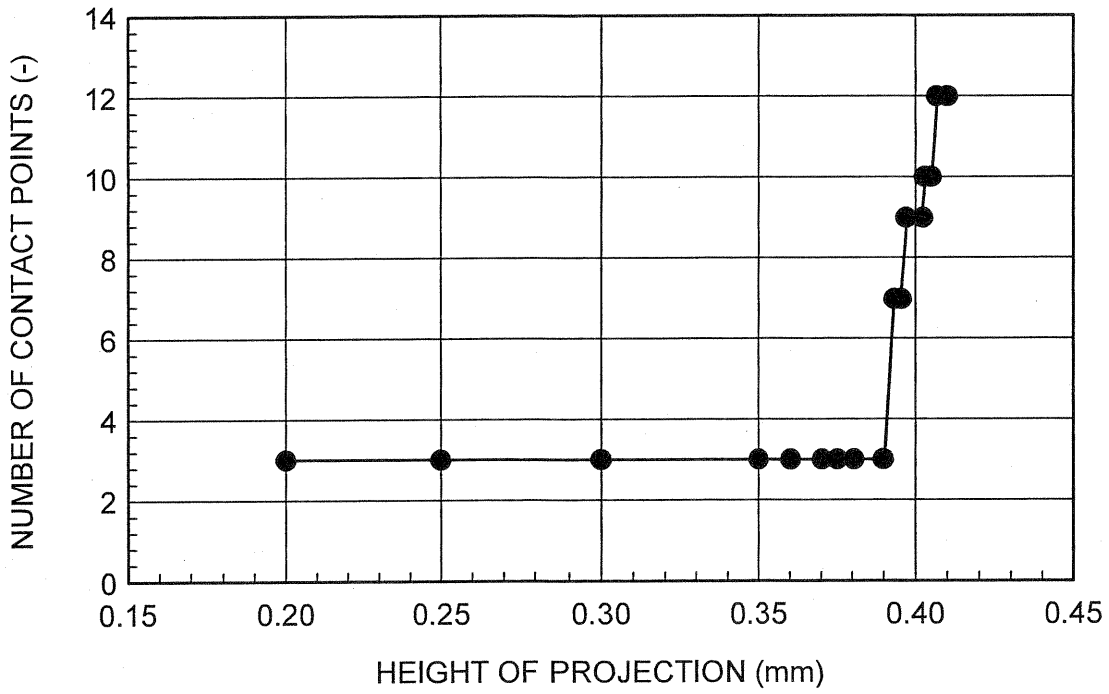
NUMBER OF CONTACT POINTS (-)
14
12
10
8
6
4
2
0
0.15
0.20
0.25
0.30
0.35
0.40
0.45
HEIGHT OF PROJECTION (mm)

FIG.21

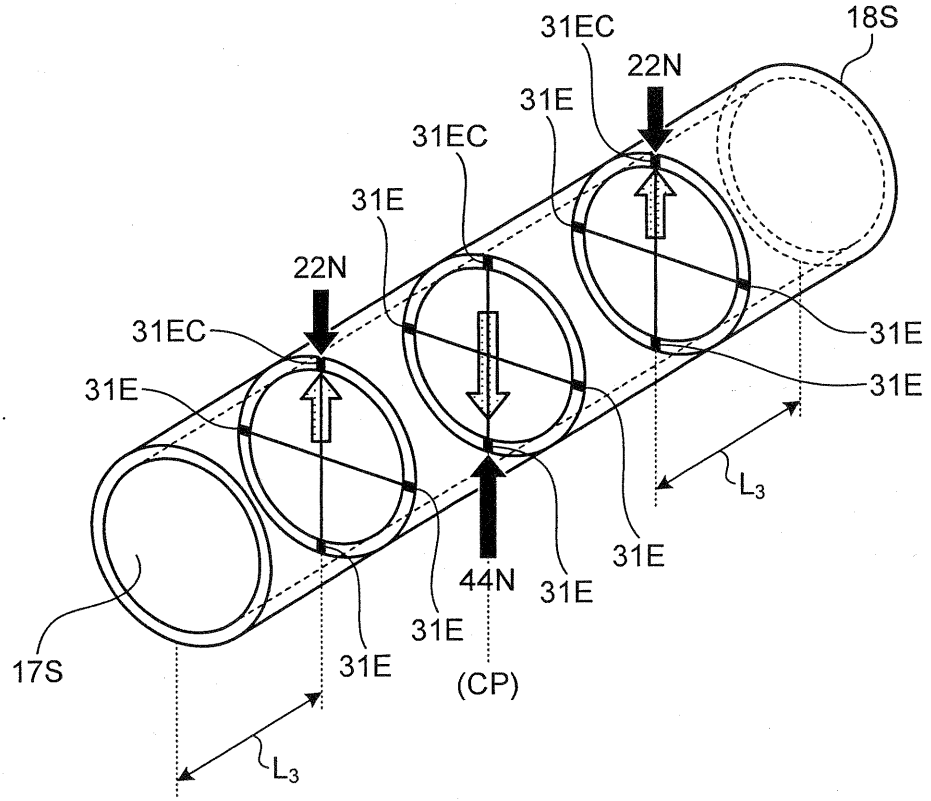
31EC
18S
22N
31E
31EC
31E
22N
31EC
31E
31E
31E
31E
31E
31E
44N
31E
31E
17S
31E
(CP)
$L_3$
$L_3$

FIG.22

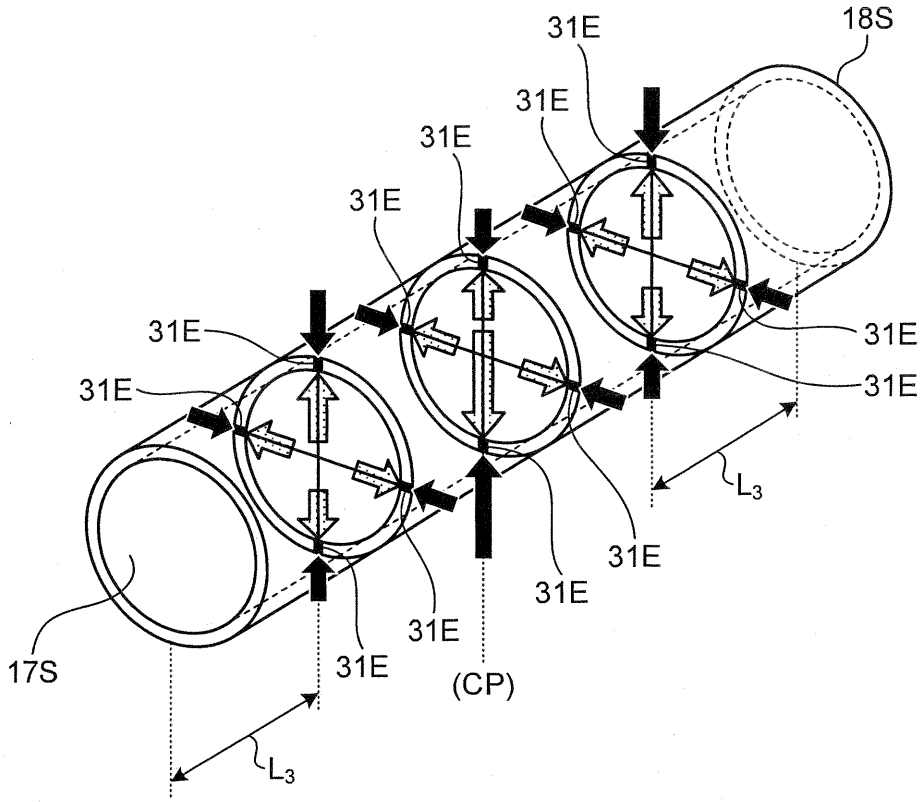
31E
18S
31E
31E
31E
31E
31E
31E
31E
31E
31E
31E
31E
31E
17S
(CP)
$L_3$
$L_3$

FIG.30A

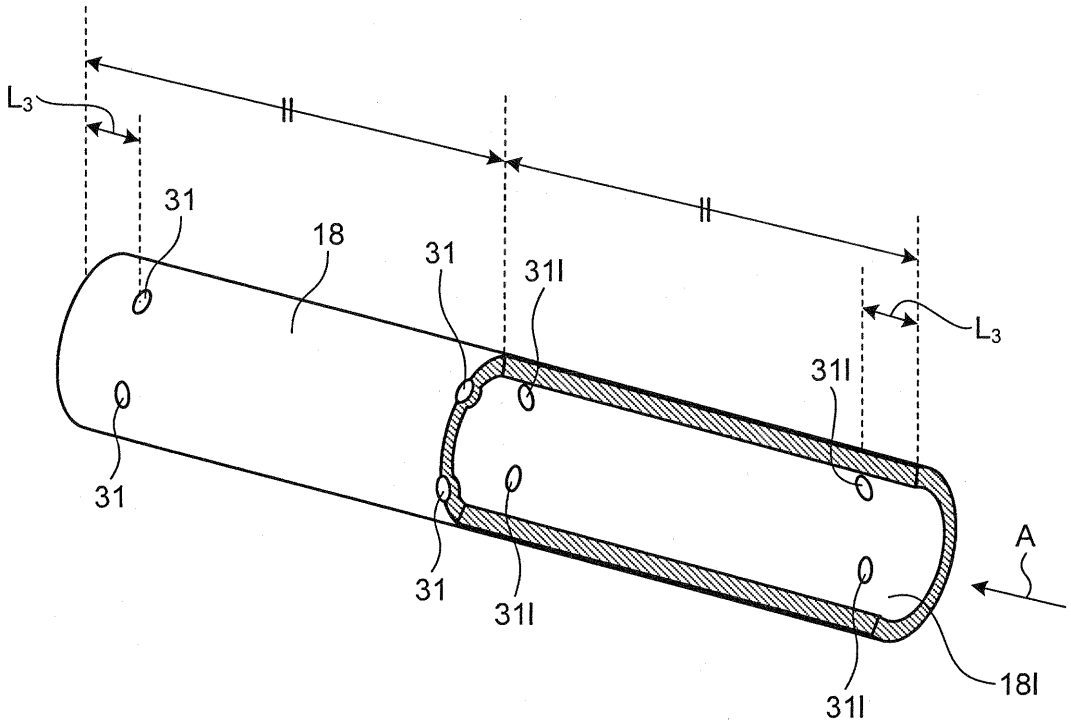


FIG.30B

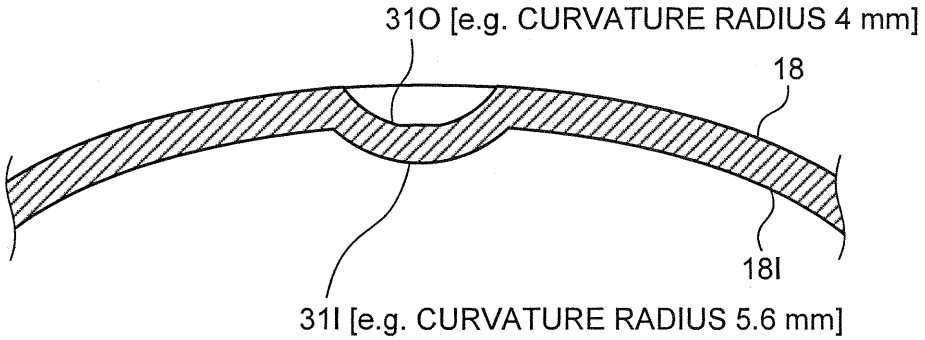

FIG.1

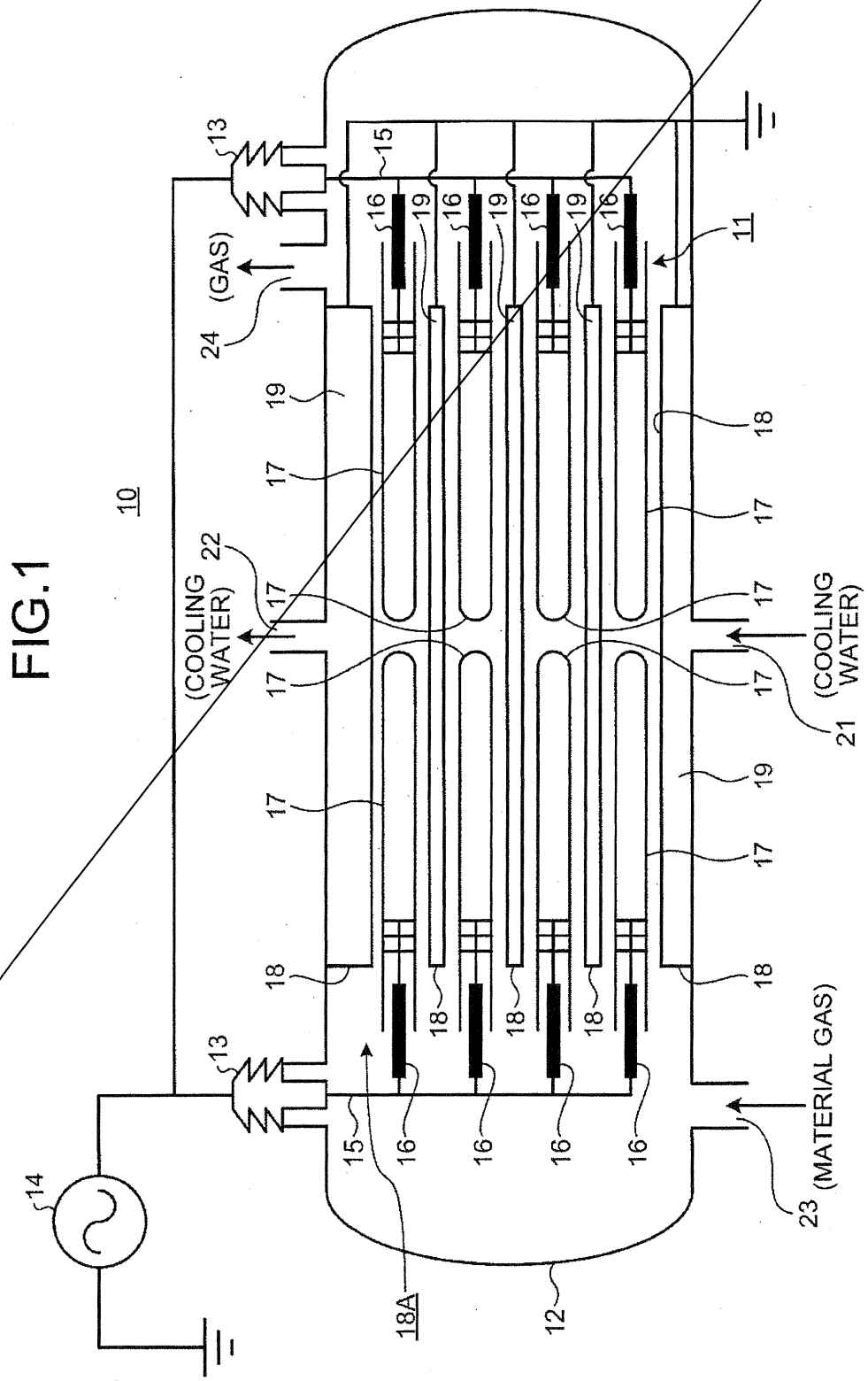
10
11
12
13
14
15
16
17
18
18A
19
21
22
23
24
(GAS)
(COOLING WATER)
(COOLING WATER)
(MATERIAL GAS)

FIG.7A

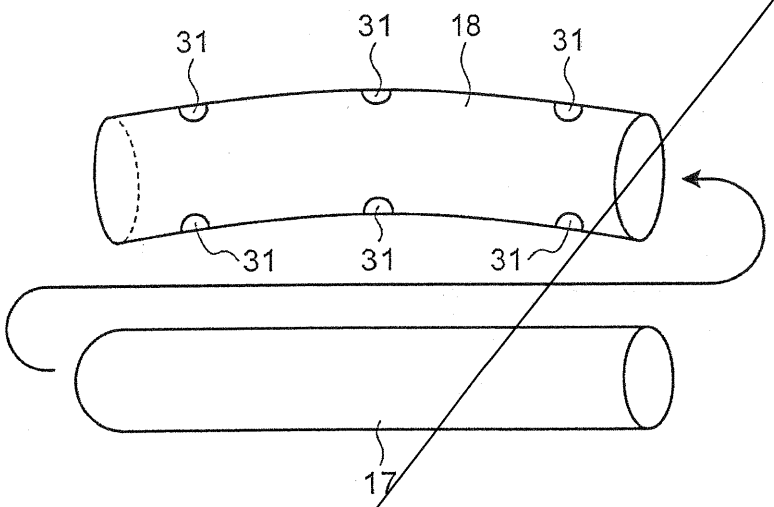


FIG.7B

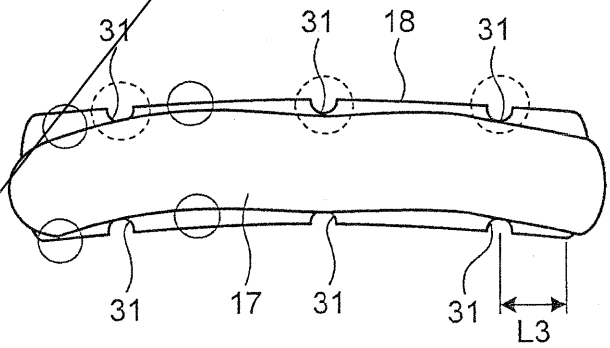

FIG.10A

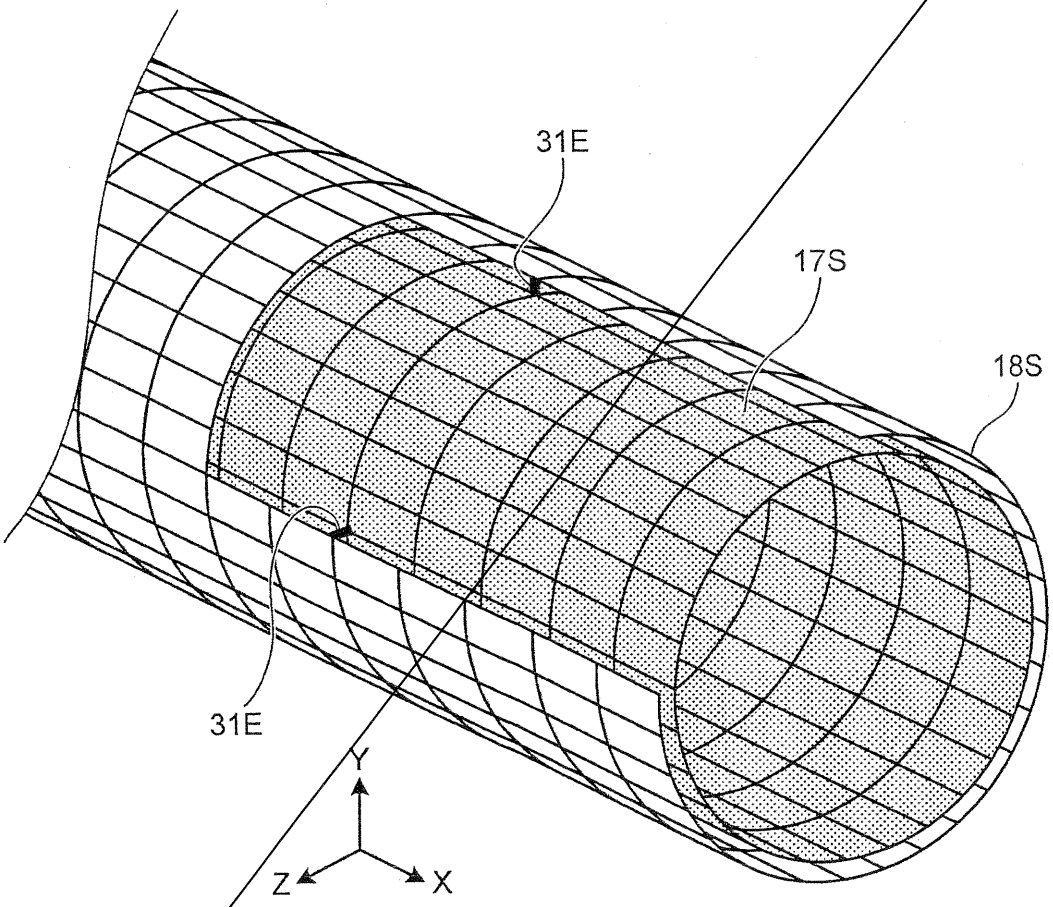


FIG.10B

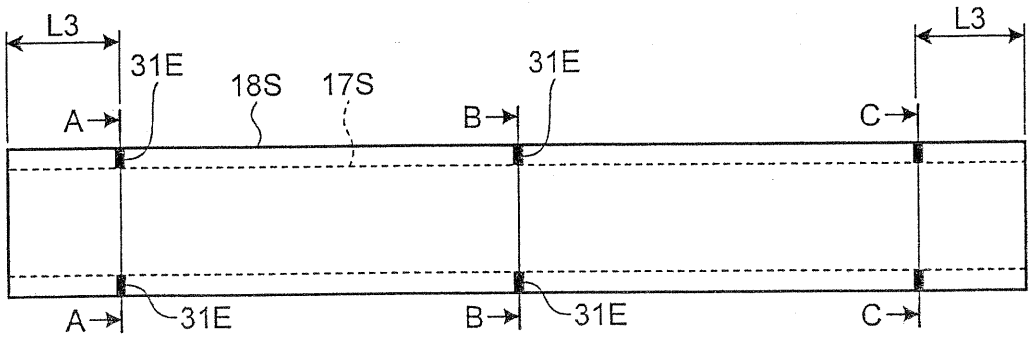

FIG.14

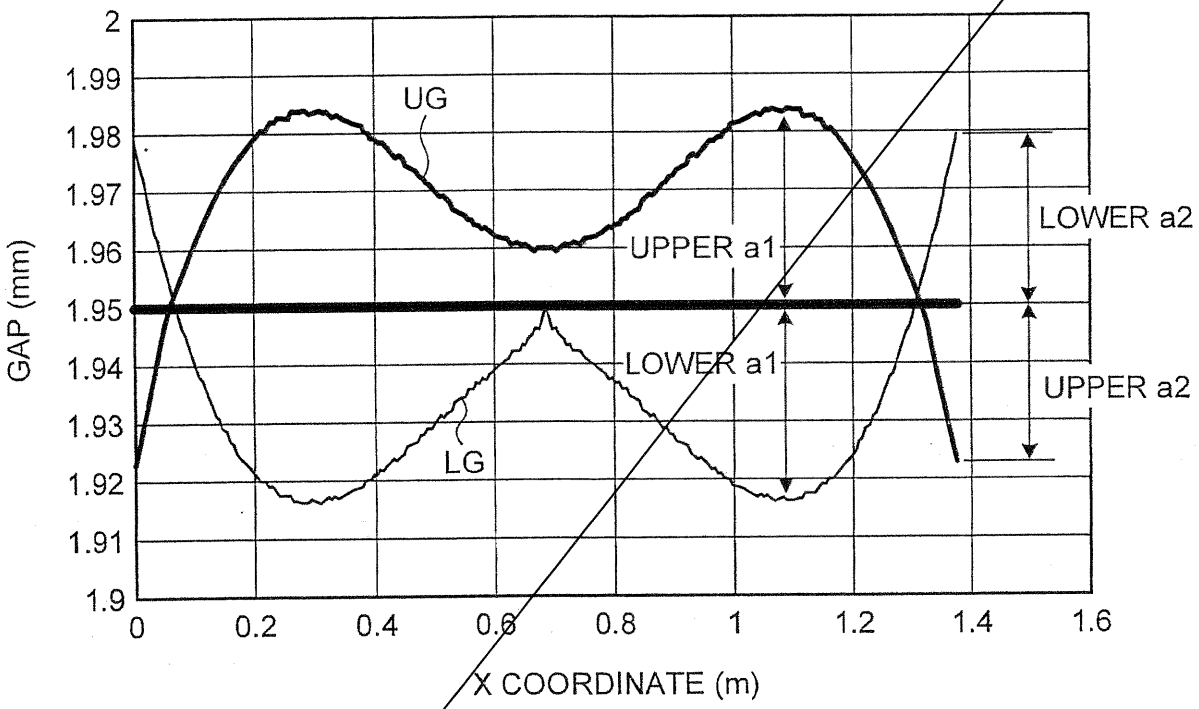
GAP (mm)
2
1.99
1.98
1.97
1.96
1.95
1.94
1.93
1.92
1.91
1.9
UG
UPPER a1
LOWER a1
LG
LOWER a2
UPPER a2
0
0.2
0.4
0.6
0.8
1
1.2
1.4
1.6
X COORDINATE (m)

FIG.15

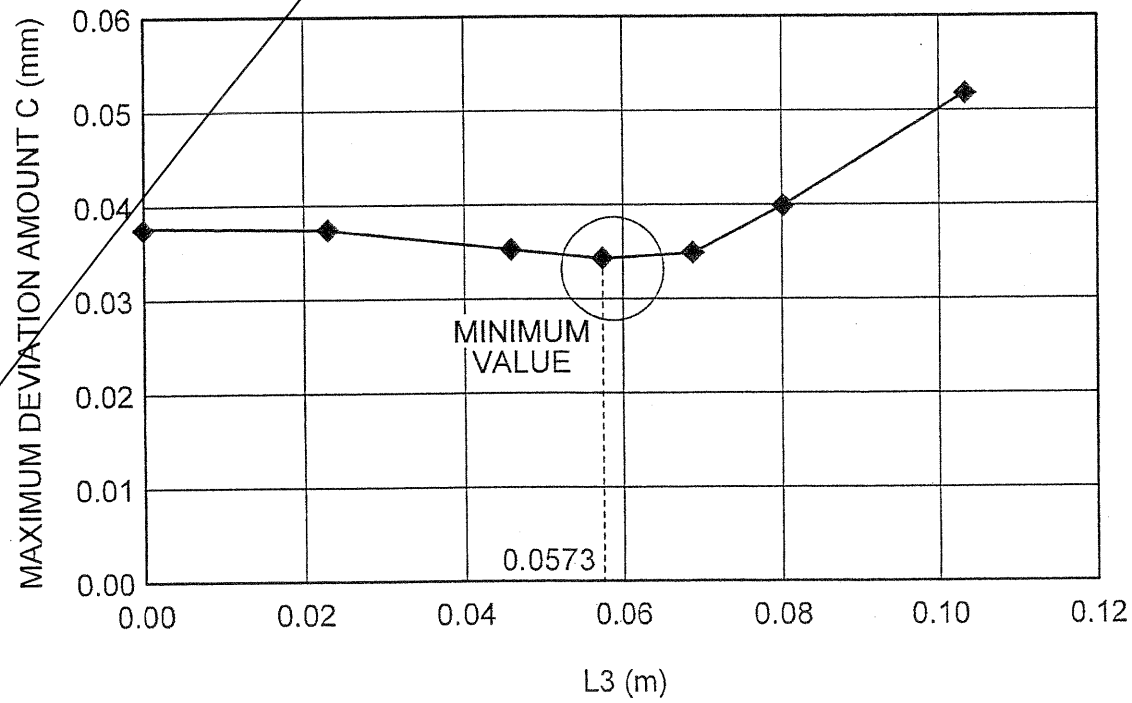
MAXIMUM DEVIATION AMOUNT C (mm)
0.06
0.05
0.04
0.03
0.02
0.01
0.00
MINIMUM VALUE
0.0573
0.00
0.02
0.04
0.06
0.08
0.10
0.12
L3 (m)

FIG.16

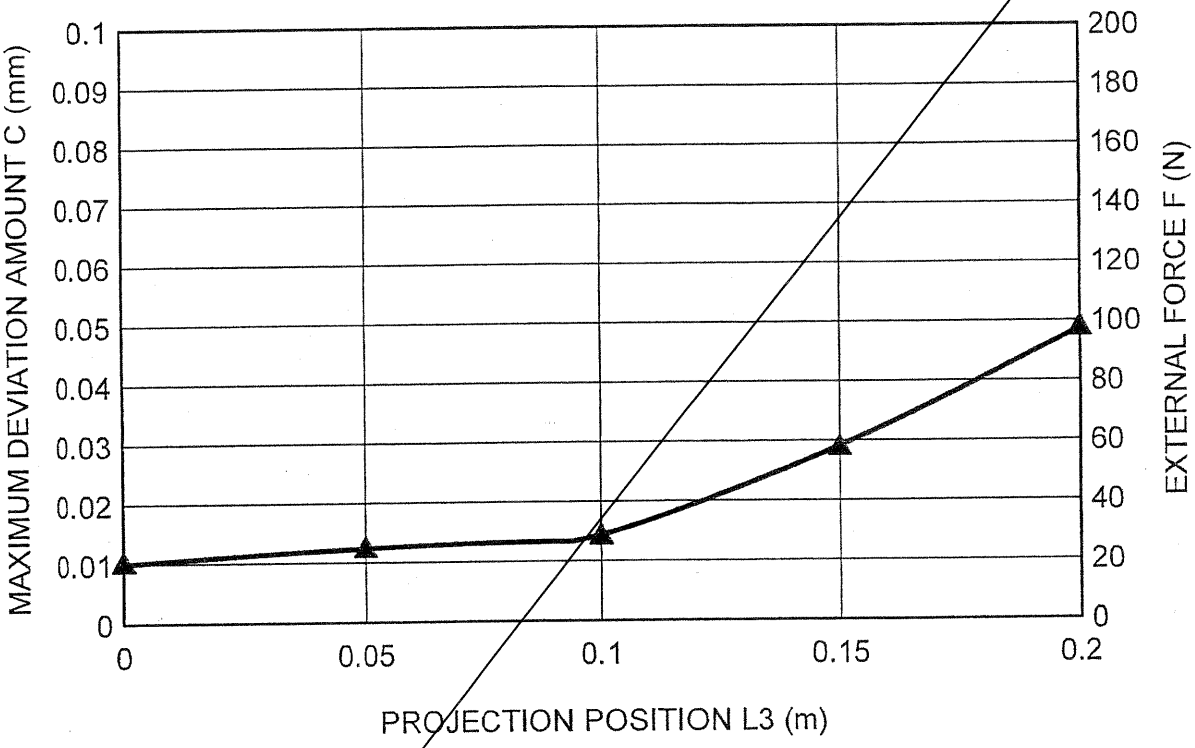
MAXIMUM DEVIATION AMOUNT C (mm)
0.1
0.09
0.08
0.07
0.06
0.05
0.04
0.03
0.02
0.01
0
EXTERNAL FORCE F (N)
200
180
160
140
120
100
80
60
40
20
0
0
0.05
0.1
0.15
0.2
PROJECTION POSITION L3 (m)

FIG.20

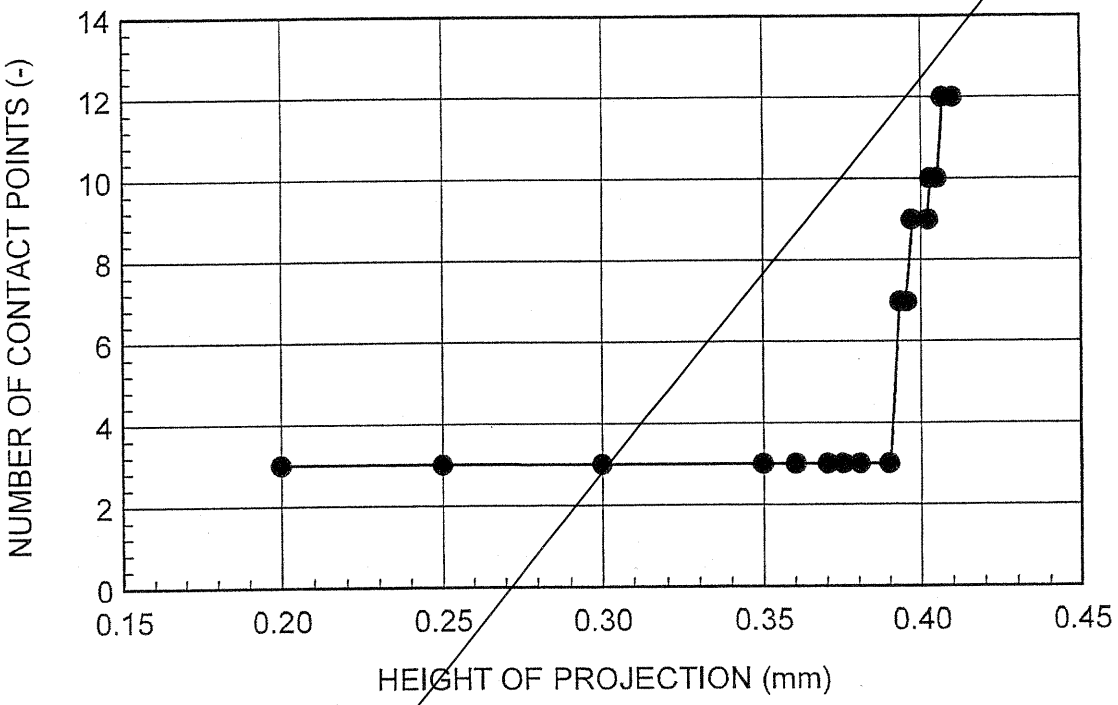
NUMBER OF CONTACT POINTS (-)
14
12
10
8
6
4
2
0
0.15
0.20
0.25
0.30
0.35
0.40
0.45
HEIGHT OF PROJECTION (mm)

FIG.21

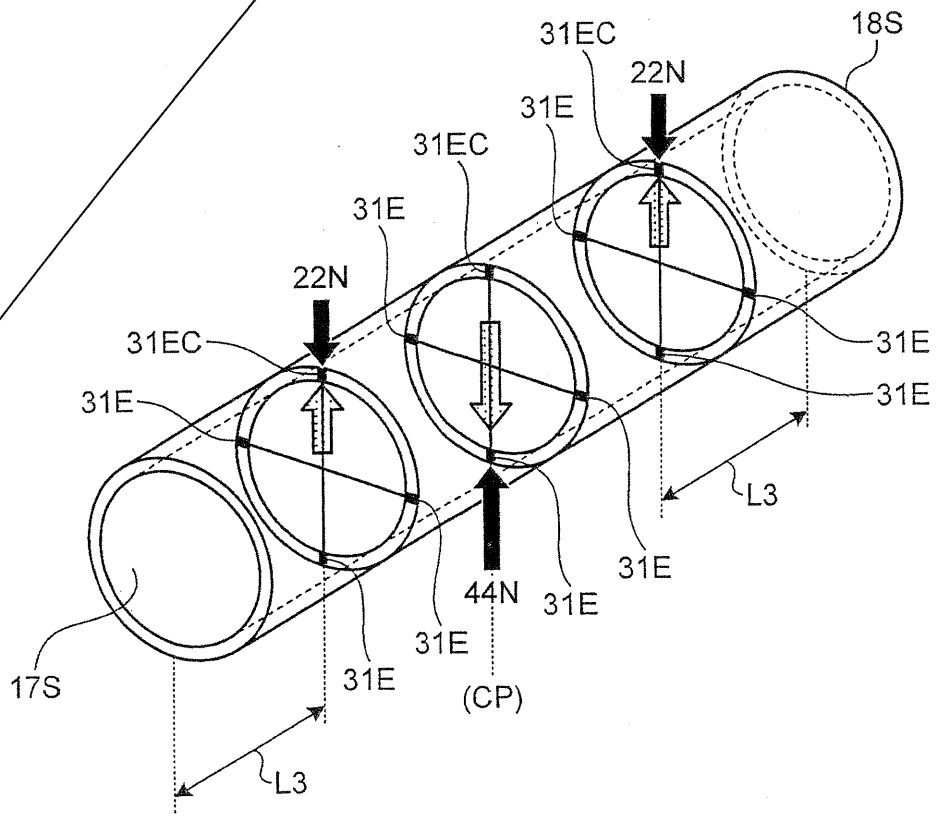
31EC
18S
22N
31E
31EC
31E
22N
31EC
31E
31E
31E
L3
31E
44N
31E
31E
17S
31E
(CP)
L3

FIG.22

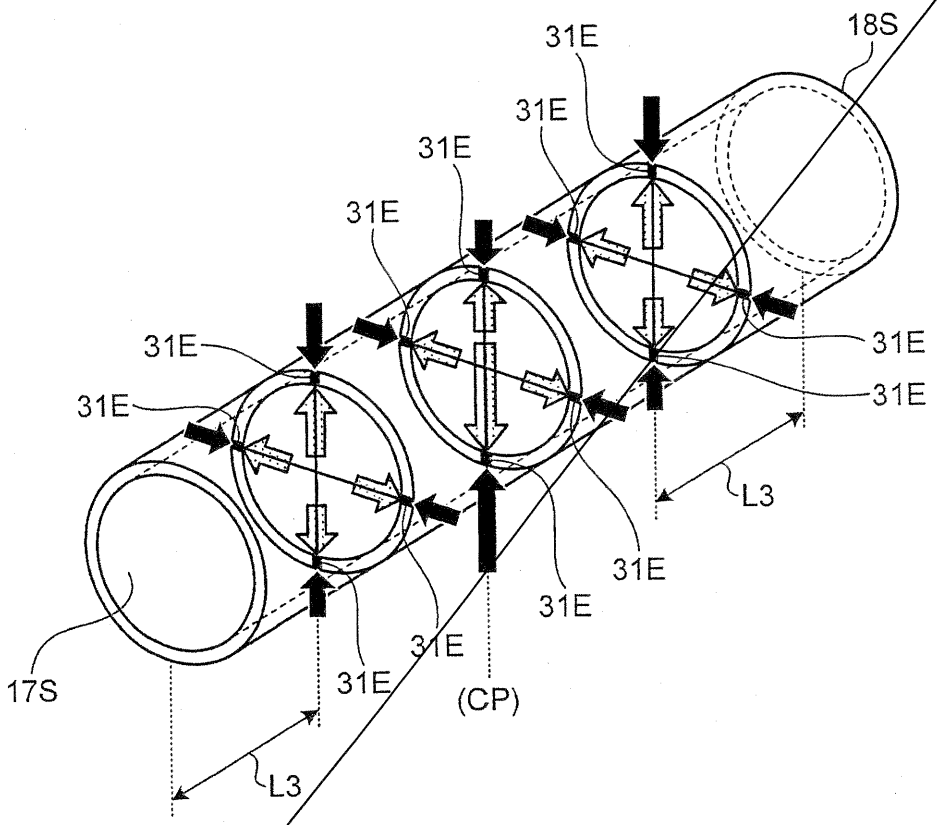
31E
18S
31E
31E
31E
31E
31E
31E
31E
31E
31E
31E
31E
31E
31E
L3
17S
(CP)
L3

FIG.30A

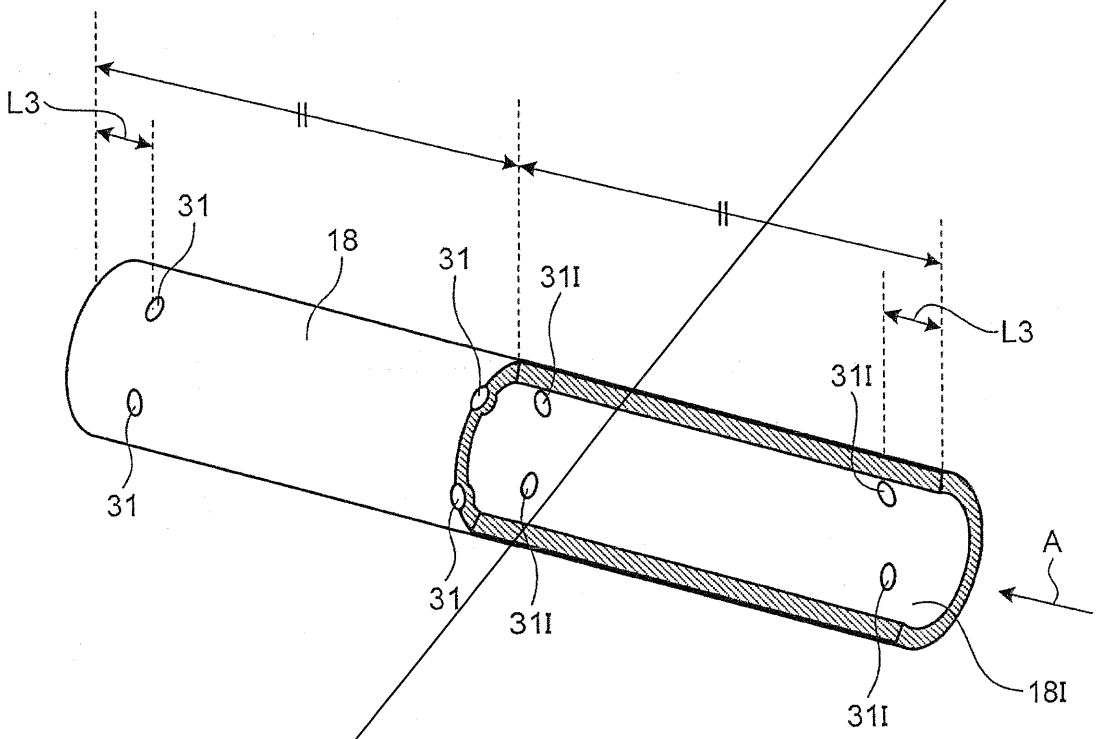


FIG.30B

