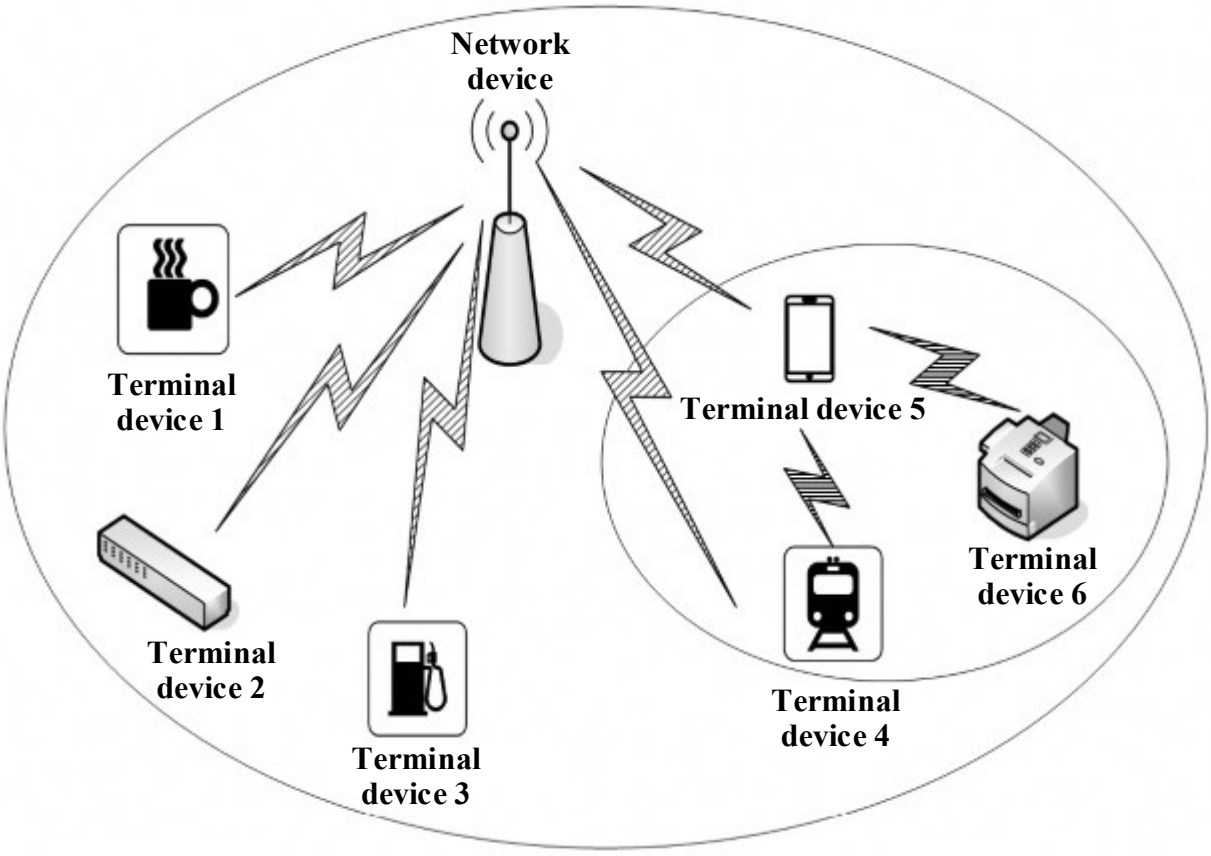
Network device
Terminal device 1
Terminal device 2
Terminal device 3
Terminal device 4
Terminal device 5
Terminal device 6

FIG. 1a

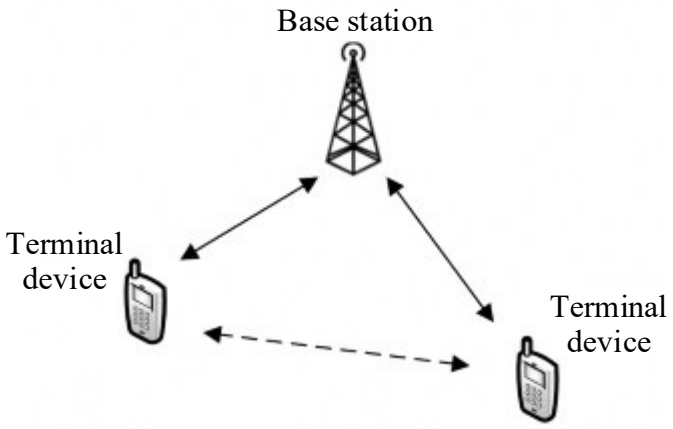
Base station
Terminal device
Terminal device

FIG. 1b

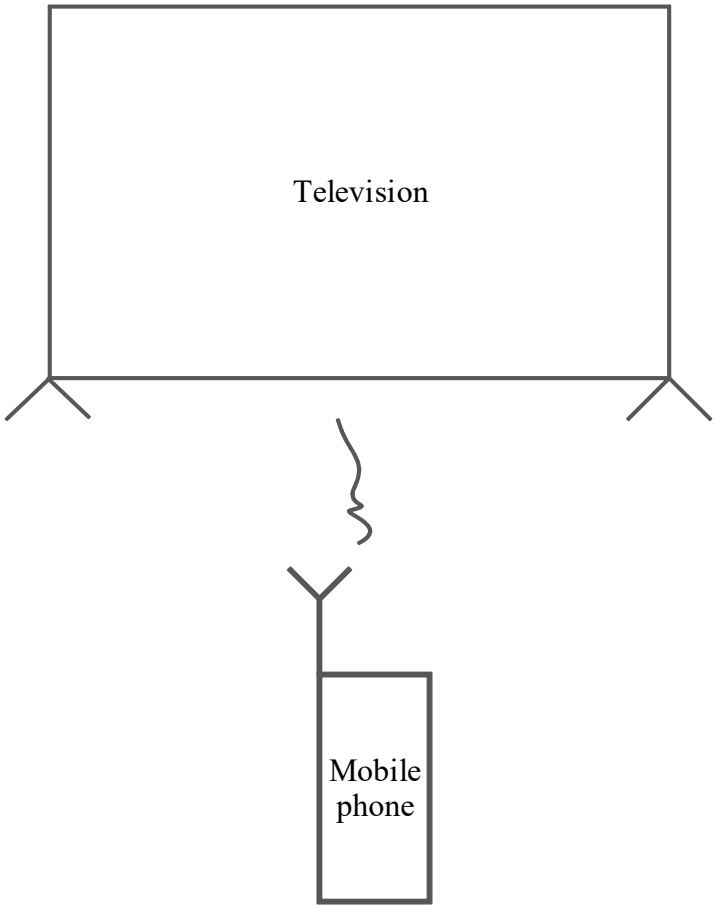
Television
Mobile phone

FIG. 1c

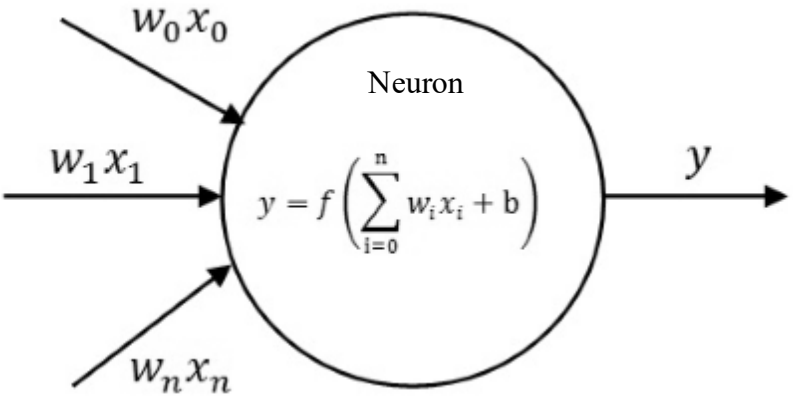
$w_0 x_0$
Neuron
$w_1 x_1$
$y = f\left(\sum_{i=0}^{n} w_i x_i + b\right)$
y
$w_n x_n$

FIG. 2a

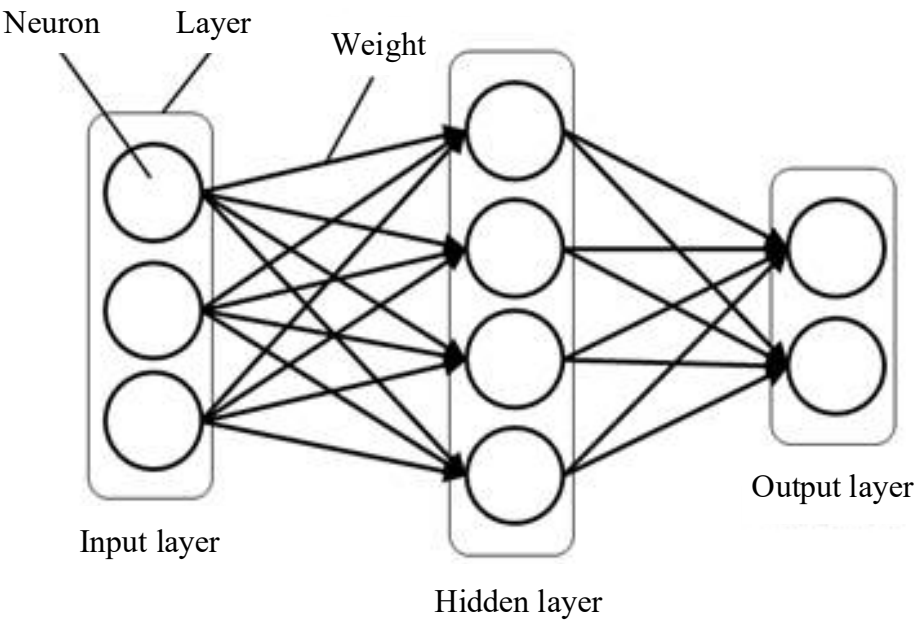
Neuron
Layer
Weight
Input layer
Hidden layer
Output layer

FIG. 2b

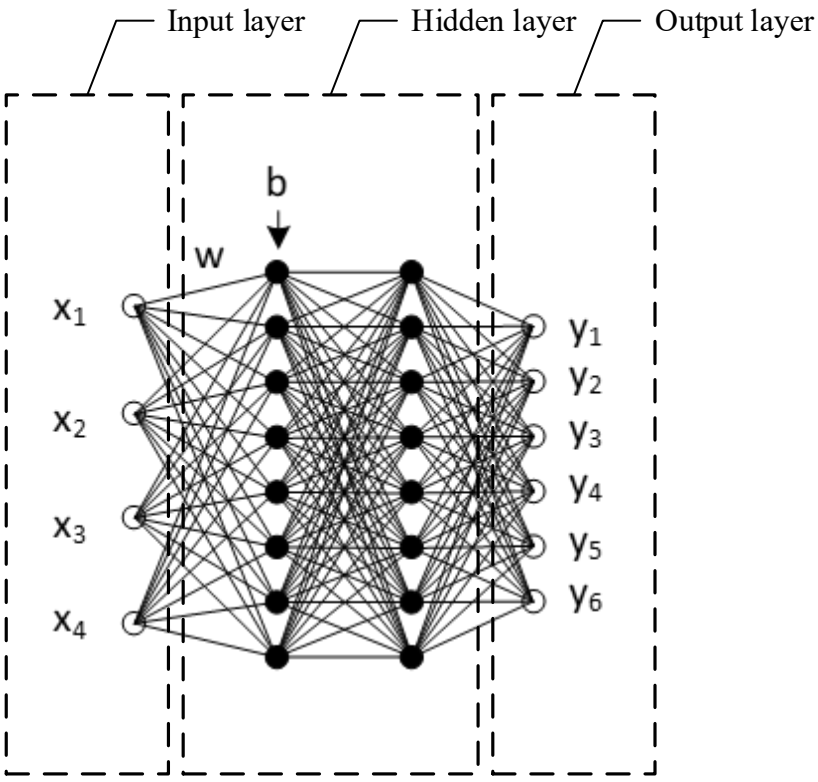
Input layer
Hidden layer
Output layer
b
w
x1
x2
x3
x4
y1
y2
y3
y4
y5
y6

FIG. 2c

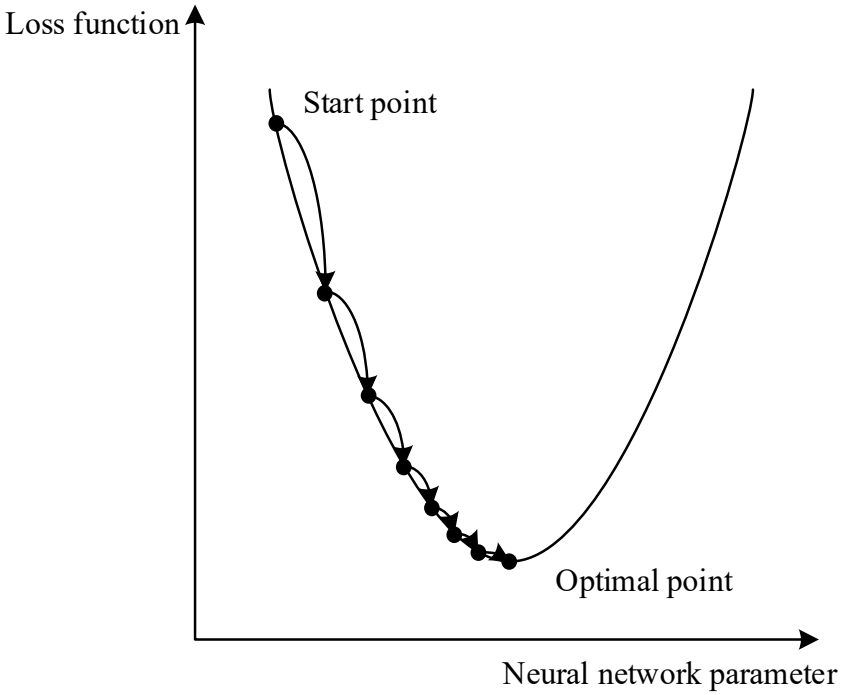
Loss function
Start point
Optimal point
Neural network parameter

FIG. 2d

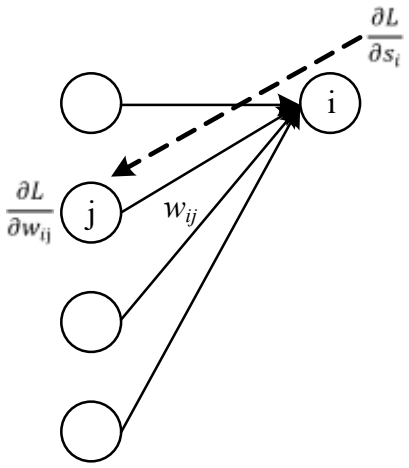
$\frac{\partial L}{\partial s_i}$
i
$\frac{\partial L}{\partial w_{ij}}$
j
w_{ij}

FIG. 2e

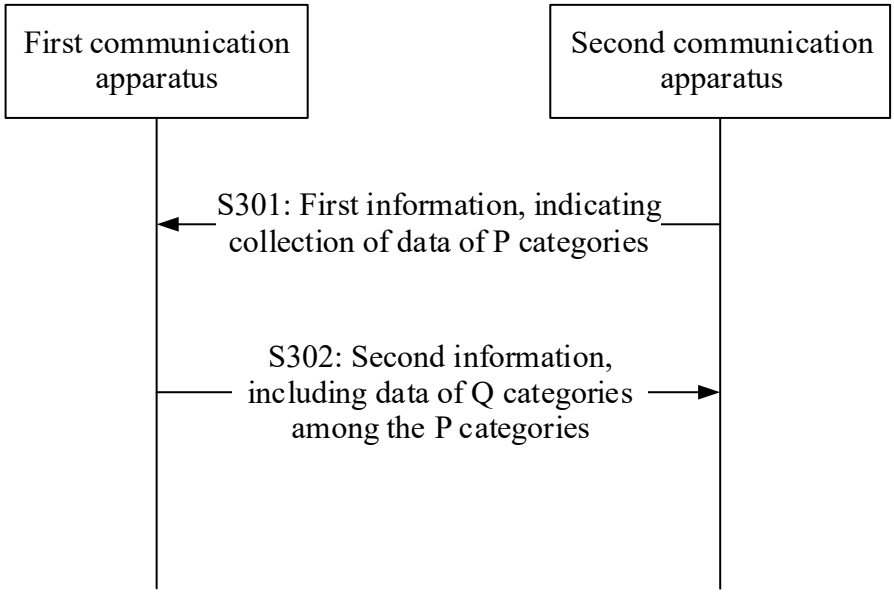
First communication apparatus
Second communication apparatus
S301: First information, indicating collection of data of P categories
S302: Second information, including data of Q categories among the P categories

FIG. 3

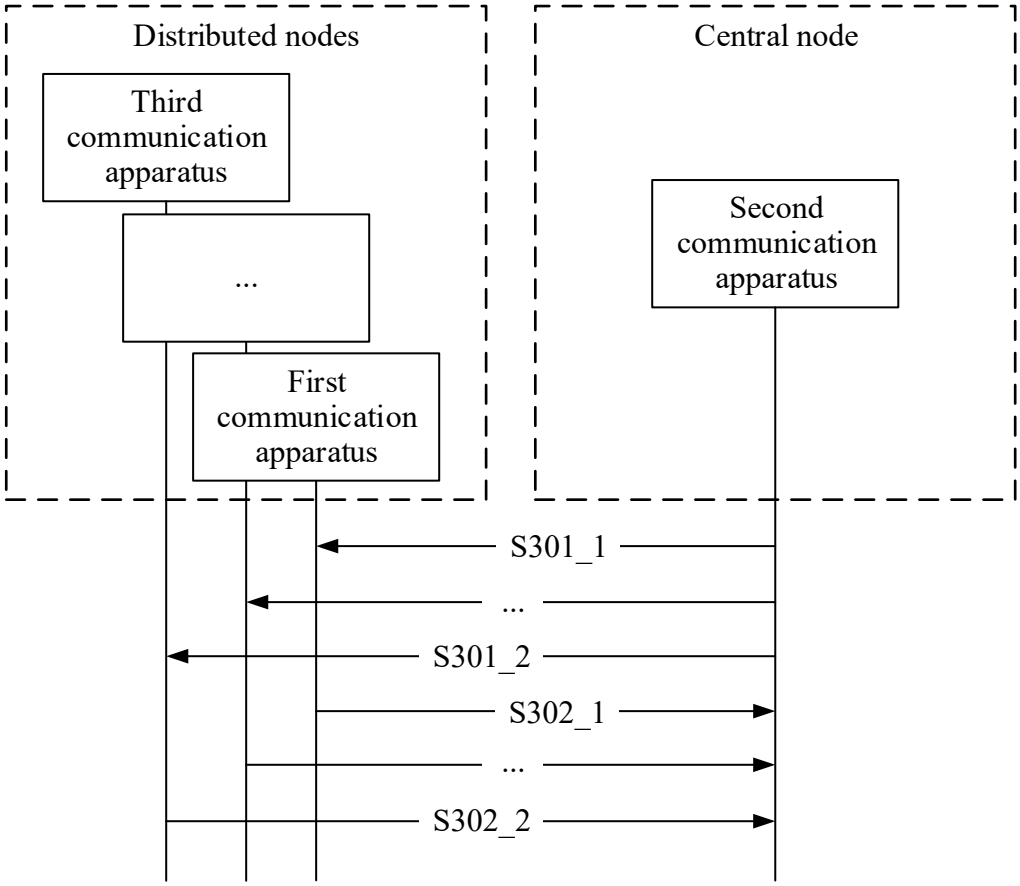
Distributed nodes
Third communication apparatus
...
First communication apparatus
Central node
Second communication apparatus
S301_1
...
S301_2
S302_1
...
S302_2

FIG. 4

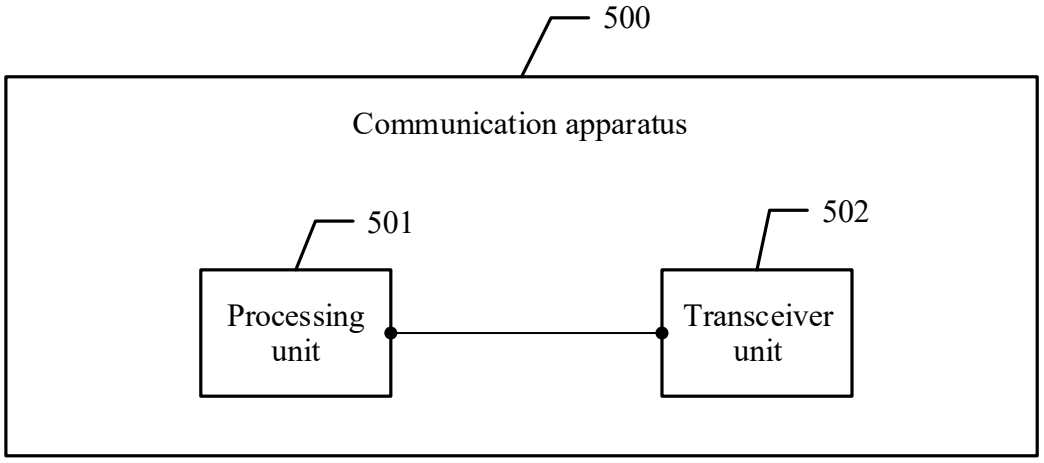
500
Communication apparatus
501
Processing unit
502
Transceiver unit

FIG. 5

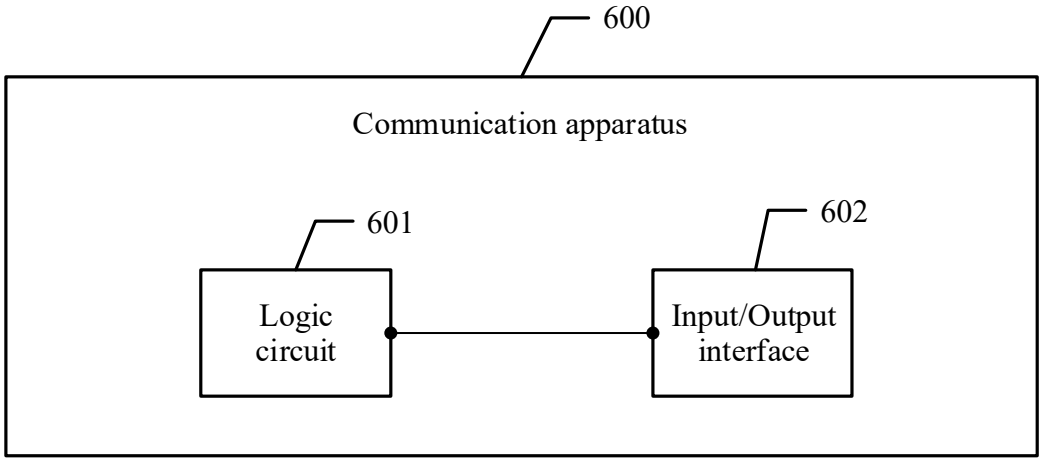
600
Communication apparatus
601
Logic circuit
602
Input/Output interface

FIG. 6

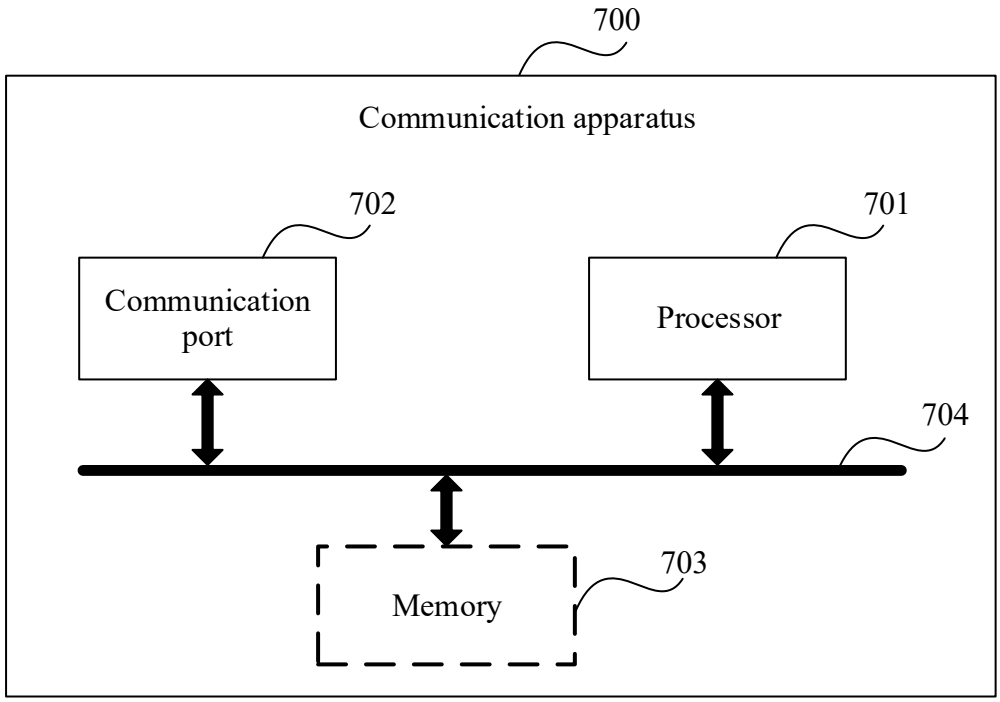
700
Communication apparatus
702
Communication port
701
Processor
704
703
Memory

FIG. 7

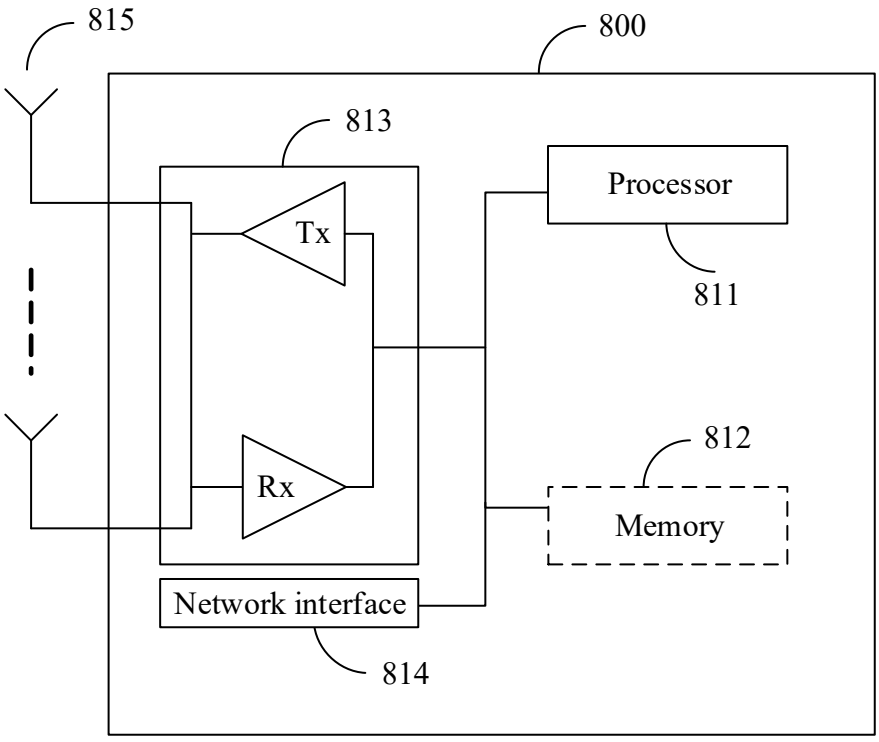
815
800
813
Processor
Tx
811
812
Rx
Memory
Network interface
814

FIG. 8

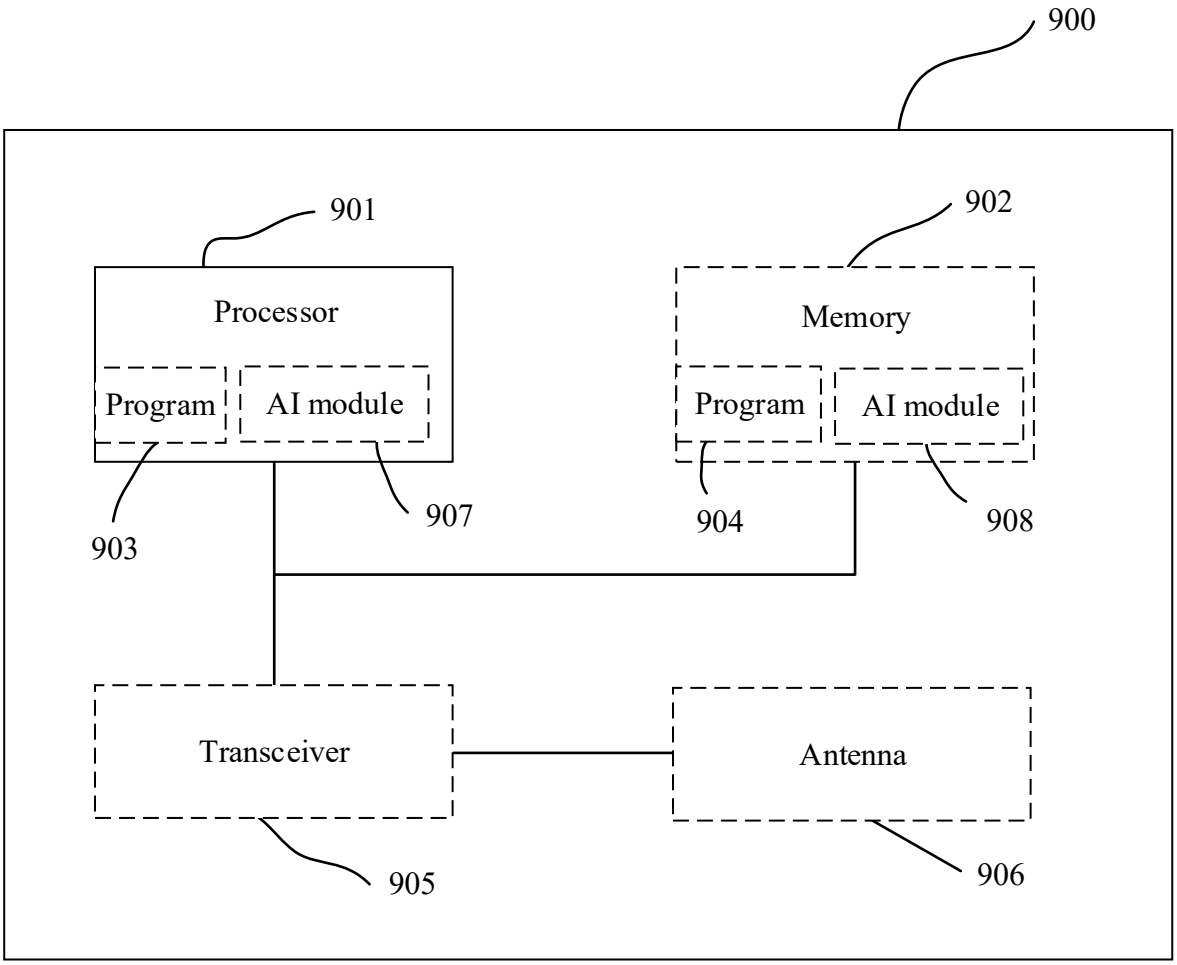
900
901
Processor
Program
AI module
903
907
902
Memory
Program
AI module
904
908
Transceiver
905
Antenna
906

FIG. 9