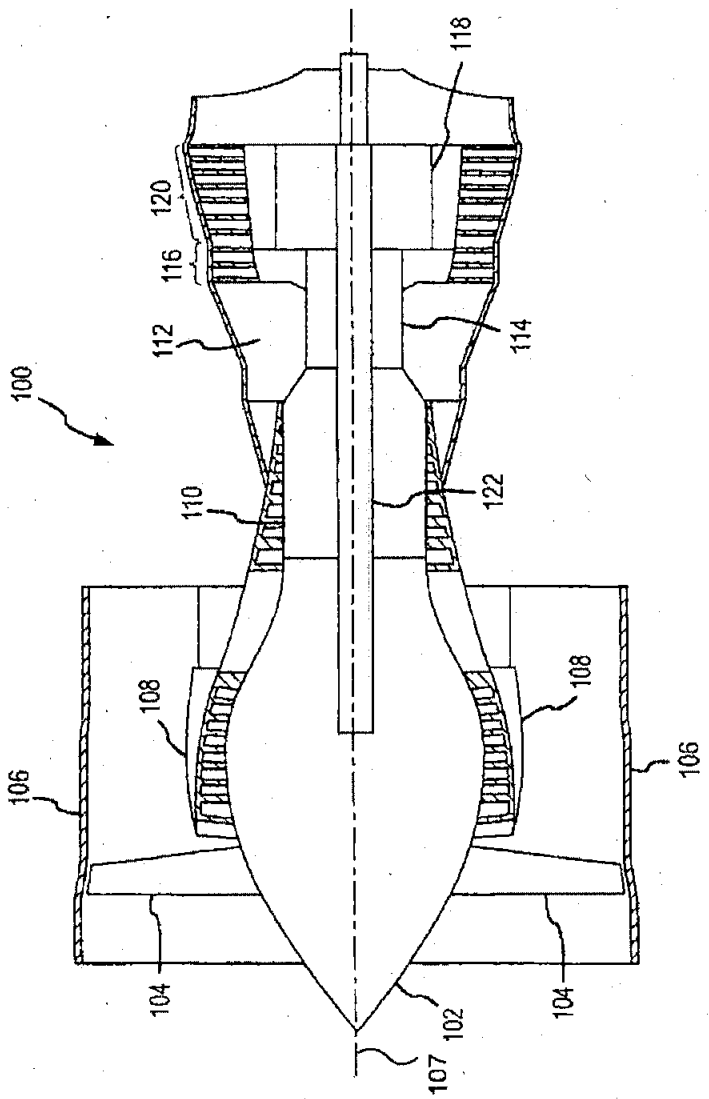

FIG.1
PRIOR ART

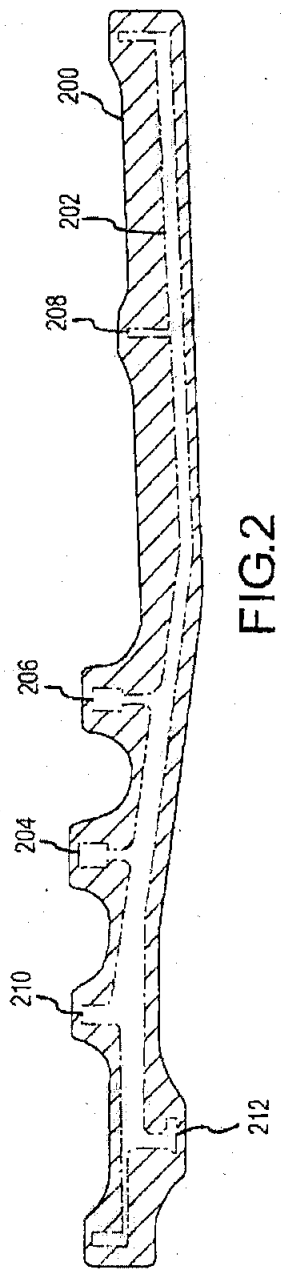

FIG.2
PRIOR ART

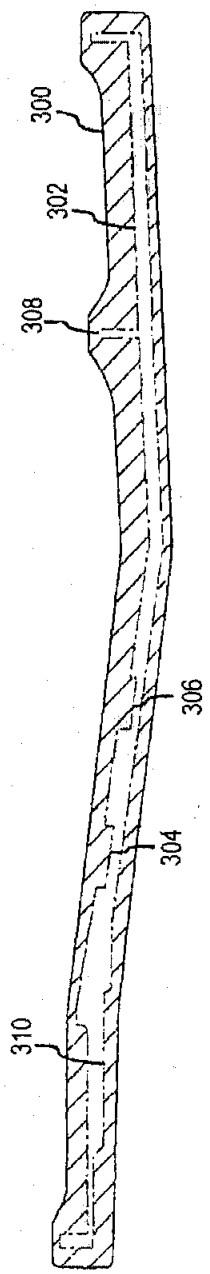

FIG.3

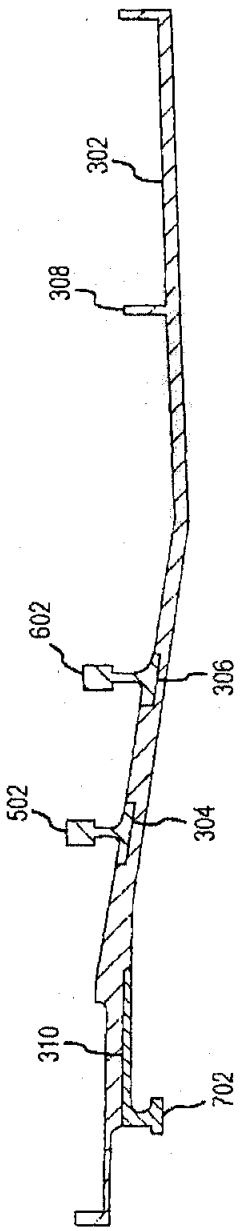

FIG.4

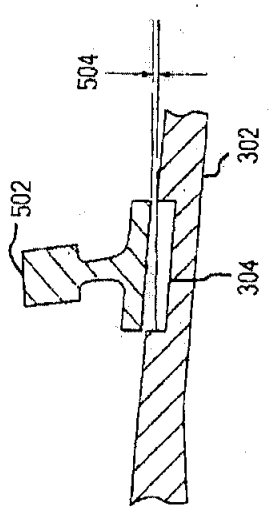

FIG.5B

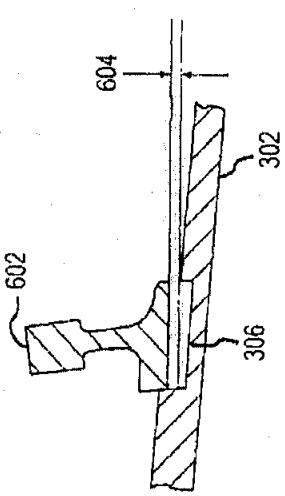

FIG.6B

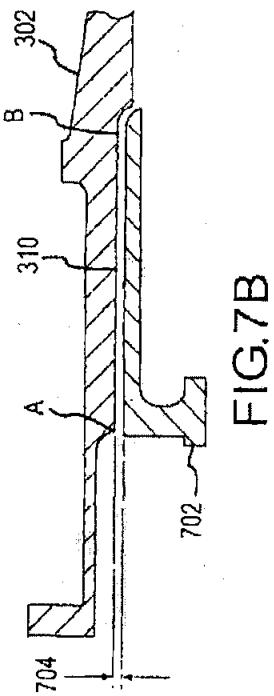

FIG.7B

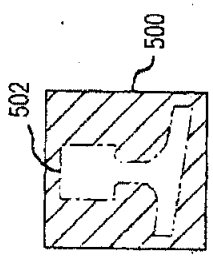

FIG.5A

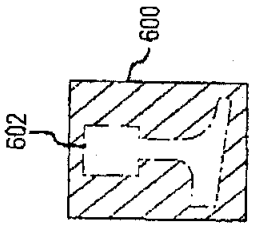

FIG.6A

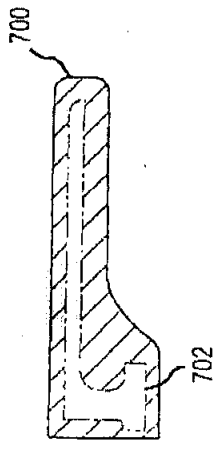

FIG.7A

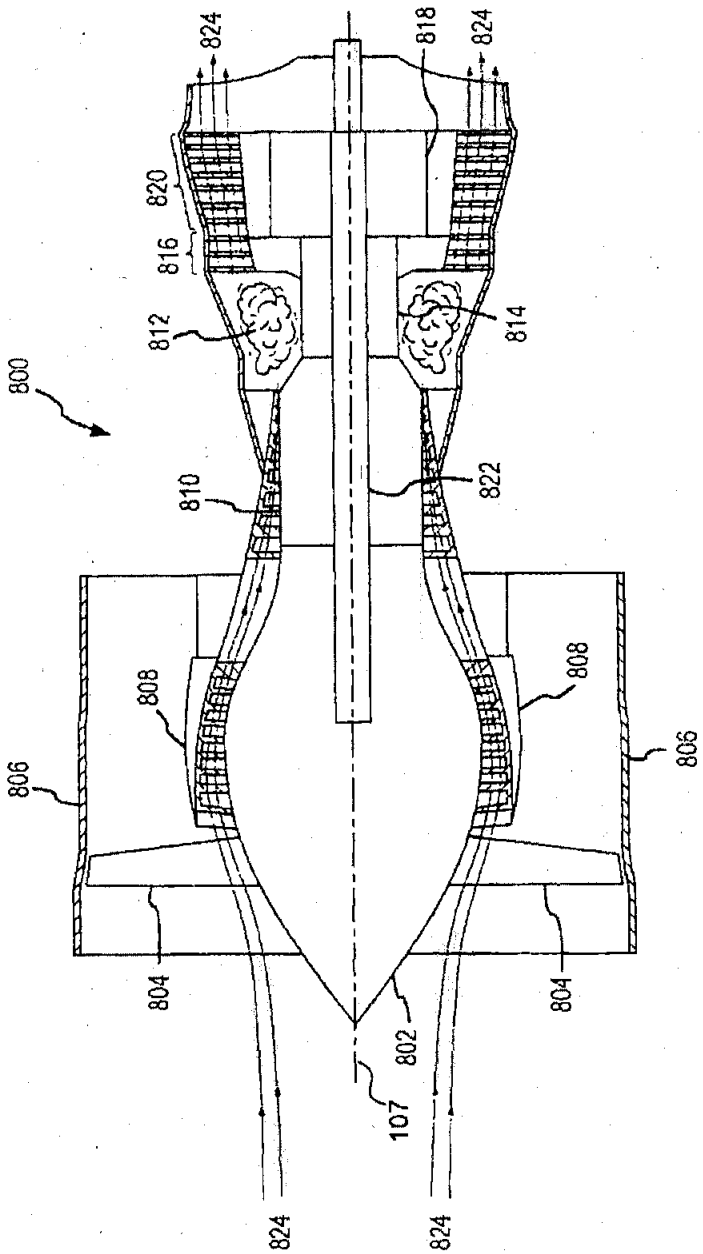
824
818
824
820
816
812
814
800
810
822
808
808
806
806
804
804
802
107
824
824

FIG.8

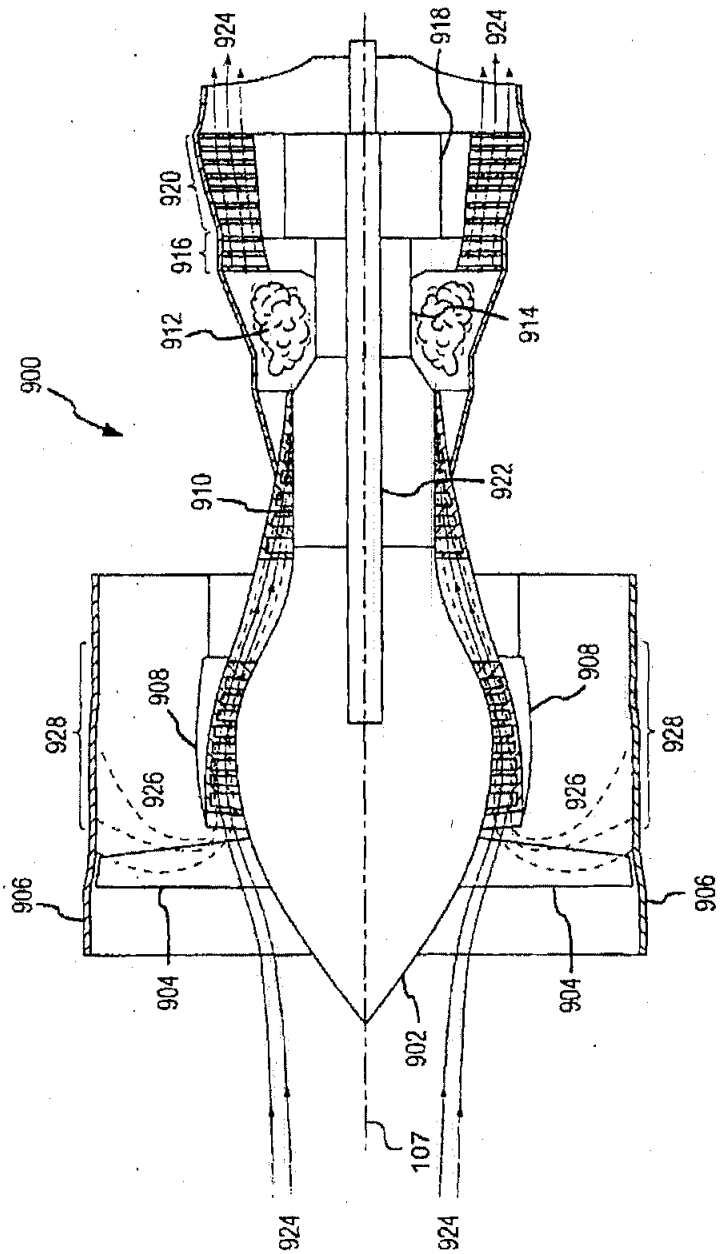
924
918
924
920
916
912
914
900
910
922
908
908
928
928
926
926
906
906
904
904
902
107
924
924

FIG.9

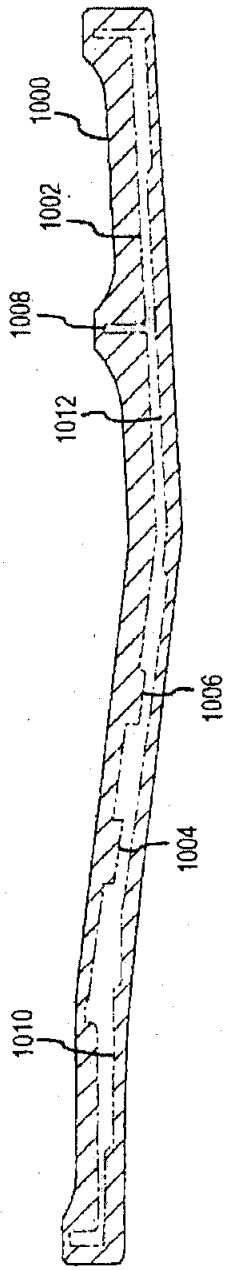
1000
1002
1008
1012
1006
1004
1010

FIG.10

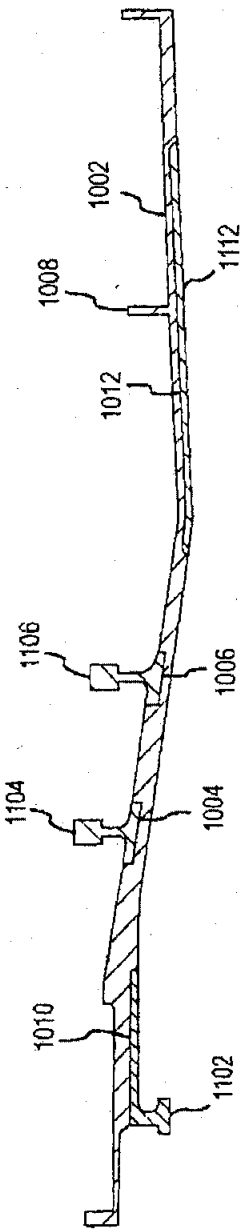
1002
1112
1008
1012
1106
1006
1104
1004
1010
1102

FIG.11

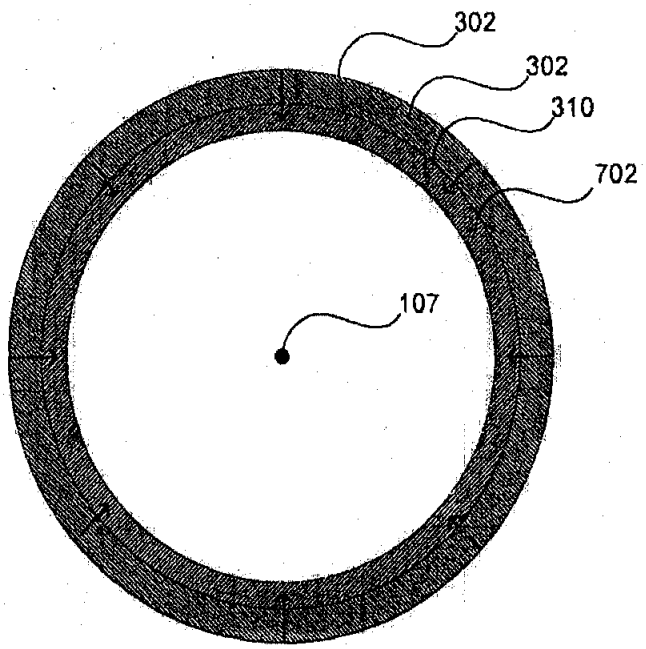

FIG. 12

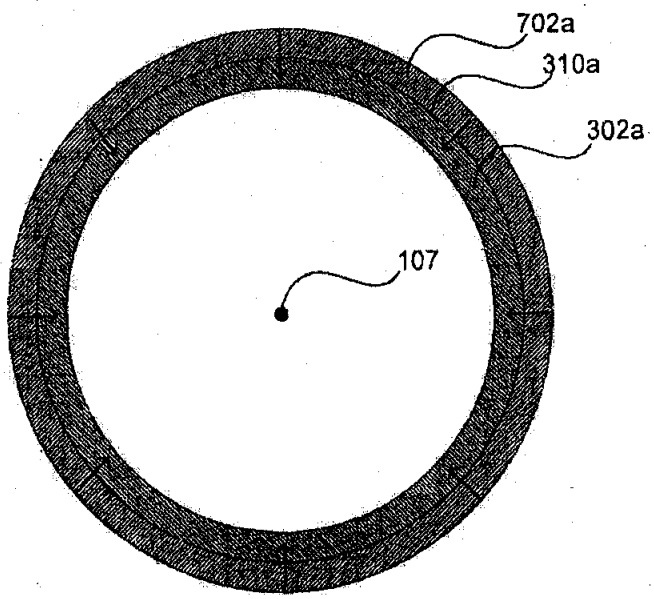

FIG. 13

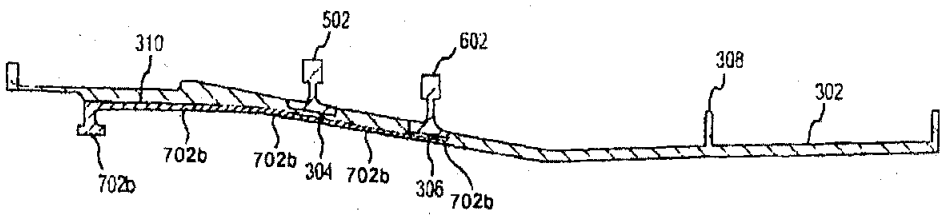
502
310
602
308
302
702b
702b
304
702b
306
702b
702b

FIG. 14

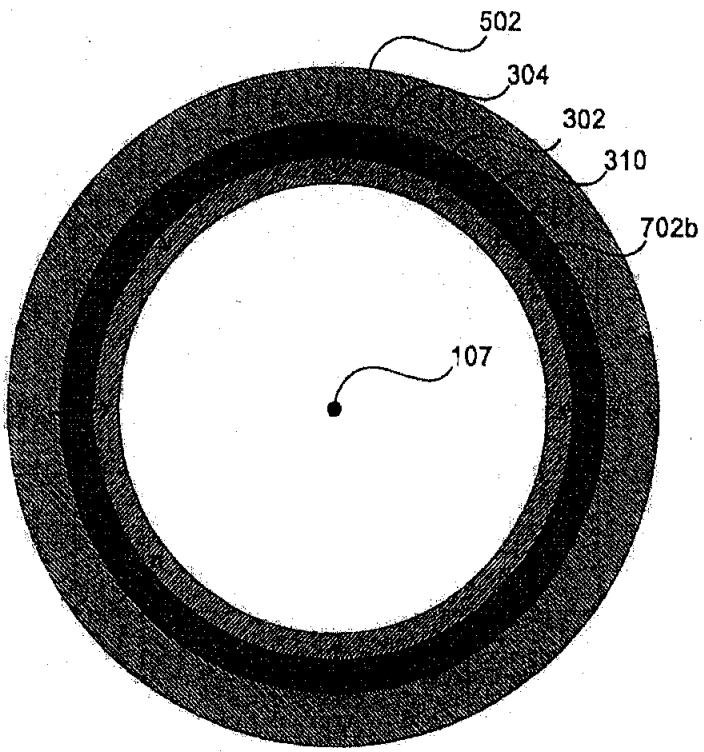
502
304
302
310
702b
107

FIG. 15

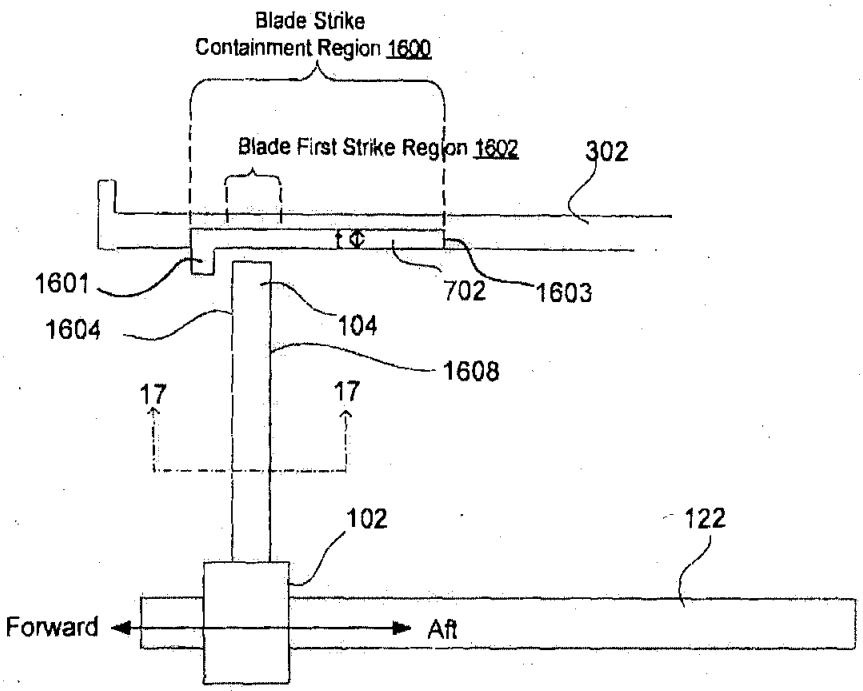
Blade Strike
Containment Region 1600
Blade First Strike Region 1602
302
1601
702
1603
1604
104
1608
17
17
102
122
Forward
Aft

FIG. 16

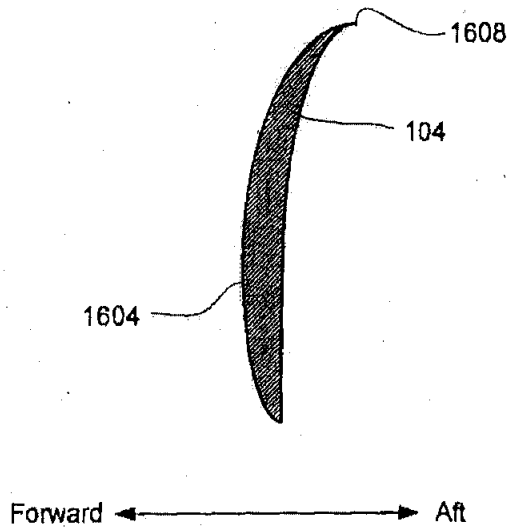
1608
104
1604
Forward
Aft

FIG. 17