(12) INTERNATIONAL APPLICATION PUBLISHED UNDER THE PATENT COOPERATION TREATY (PCT)

(19) World Intellectual Property Organization
International Bureau

(43) International Publication Date
09 October 2025 (09.10.2025)

WIPO | PCT

(10) International Publication Number
WO 2025/211958 A1

(51) International Patent Classification:
B66C 1/30 (2006.01) *B66C 1/66* (2006.01)

(21) International Application Number:
PCT/NL2025/050156

(22) International Filing Date:
01 April 2025 (01.04.2025)

(25) Filing Language: English

(26) Publication Language: English

(30) Priority Data:
2037400 04 April 2024 (04.04.2024) NL

(71) Applicant: **IQIP HOLDING B.V.** [NL/NL]; Molendijk 94, 3361 EP Sliedrecht (NL).

(72) Inventors: **PEERDEMAN, Marius**; Molendijk 94, 3361 EP Sliedrecht (NL). **ZUIDGEEST, Quintus Wilhelmus Petrus Maria**; Molendijk 94, 3361 EP Sliedrecht (NL).

(74) Agent: **NEDERLANDSCH OCTROOIBUREAU**; P.O. Box 29720, 2502 LS The Hague (NL).

(81) Designated States *(unless otherwise indicated, for every kind of national protection available)*: AE, AG, AL, AM, AO, AT, AU, AZ, BA, BB, BG, BH, BN, BR, BW, BY, BZ, CA, CH, CL, CN, CO, CR, CU, CV, CZ, DE, DJ, DK, DM, DO, DZ, EC, EE, EG, ES, FI, GB, GD, GE, GH, GM, GT, HN, HR, HU, ID, IL, IN, IQ, IR, IS, IT, JM, JO, JP, KE, KG, KH, KN, KP, KR, KW, KZ, LA, LC, LK, LR, LS, LU, LY, MA, MD, MG, MK, MN, MU, MW, MX, MY, MZ, NA, NG, NI, NO, NZ, OM, PA, PE, PG, PH, PL, PT, QA, RO, RS, RU, RW, SA, SC, SD, SE, SG, SK, SL, ST, SV, SY, TH, TJ, TM, TN, TR, TT, TZ, UA, UG, US, UY, UZ, VC, VN, WS, ZA, ZM, ZW.

(84) Designated States *(unless otherwise indicated, for every kind of regional protection available)*: ARIPO (BW, CV, GH, GM, KE, LR, LS, MW, MZ, NA, RW, SC, SD, SL, ST, SZ, TZ, UG, ZM, ZW), Eurasian (AM, AZ, BY, KG, KZ, RU, TJ, TM), European (AL, AT, BE, BG, CH, CY, CZ, DE, DK, EE, ES, FI, FR, GB, GR, HR, HU, IE, IS, IT, LT, LU, LV, MC, ME, MK, MT, NL, NO, PL, PT, RO, RS, SE, SI, SK, SM, TR), OAPI (BF, BJ, CF, CG, CI, CM, GA, GN, GQ, GW, KM, ML, MR, NE, SN, TD, TG).

Published:
— *with international search report (Art. 21(3))*

(54) Title: COUPLING DEVICE FOR CONNECTING AND DISCONNECTING TO A COUPLING HEAD TO BE LIFTED

Fig. 1

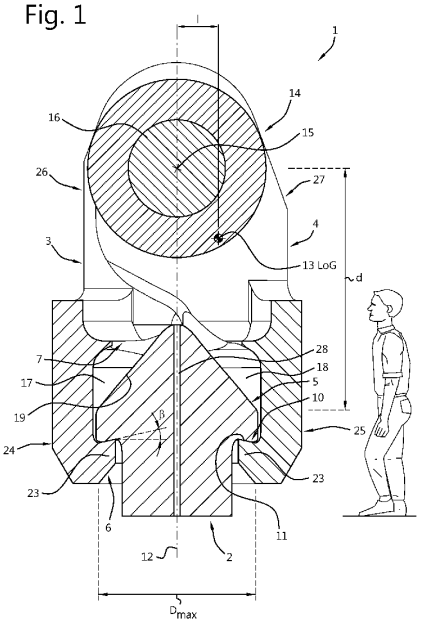

(57) Abstract: The invention relates to a coupling device (1) for connecting and disconnecting to a coupling head (2) to be lifted, comprising; at least two pivotably mounted arm members (3, 4), mutually pivotable between an open position wherein the coupling head can be received in and released from an interior cavity (5) defined by the at least two arm members, and a closed position wherein the coupling head can be secured in the interior cavity to enable lifting of the coupling head, a first cam following member (6) arranged at an exterior of at least one arm member for engaging the coupling head and pivot the at least one arm member to the open position upon lowering the coupling device on the coupling head, a second cam following member (7) arranged within the interior cavity for engaging the coupling head and pivot the two arm members from the closed position to the open position upon lowering the coupling device with respect to the coupling head while the coupling head is in the interior cavity.

WO 2025/211958 A1