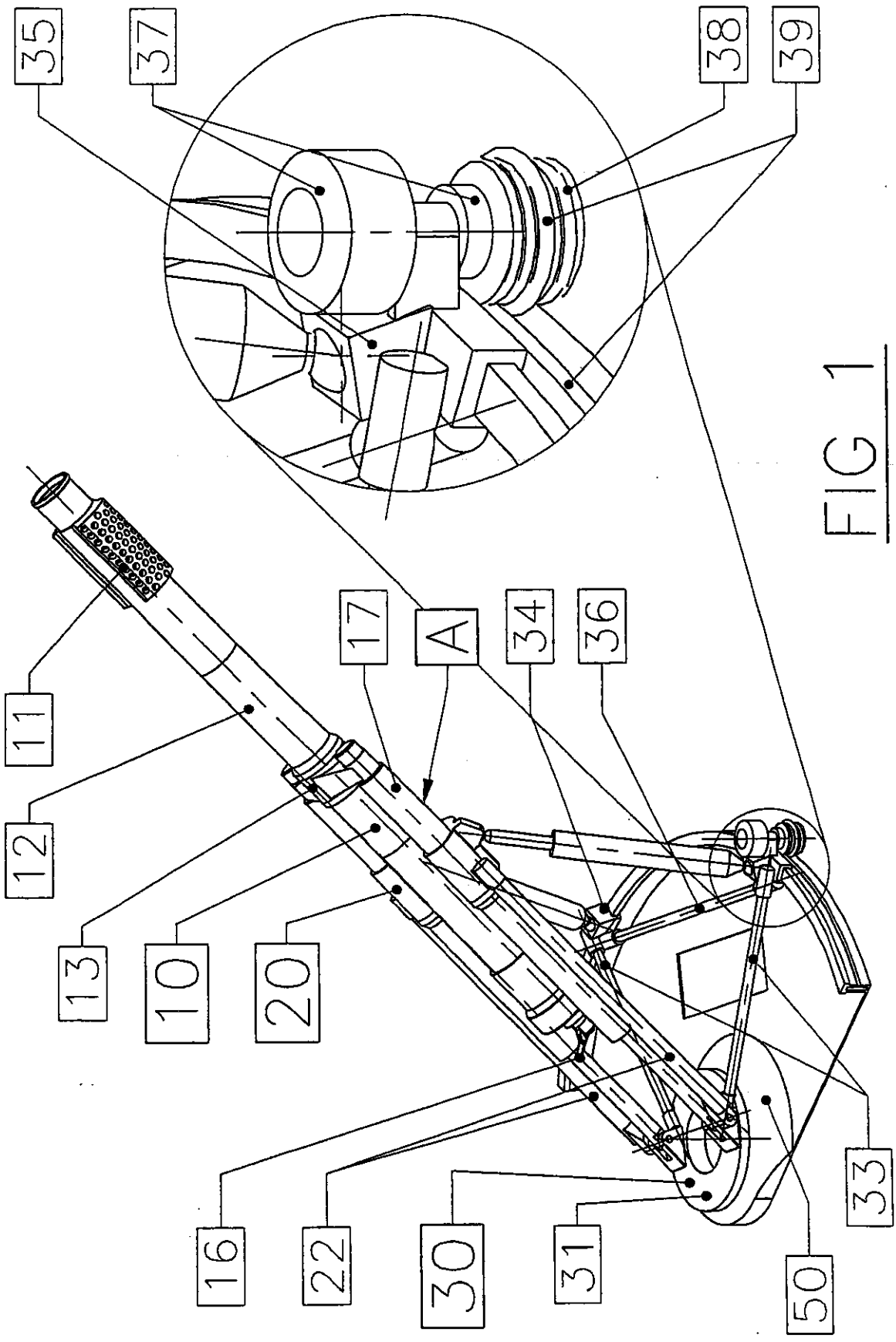

FIG 1

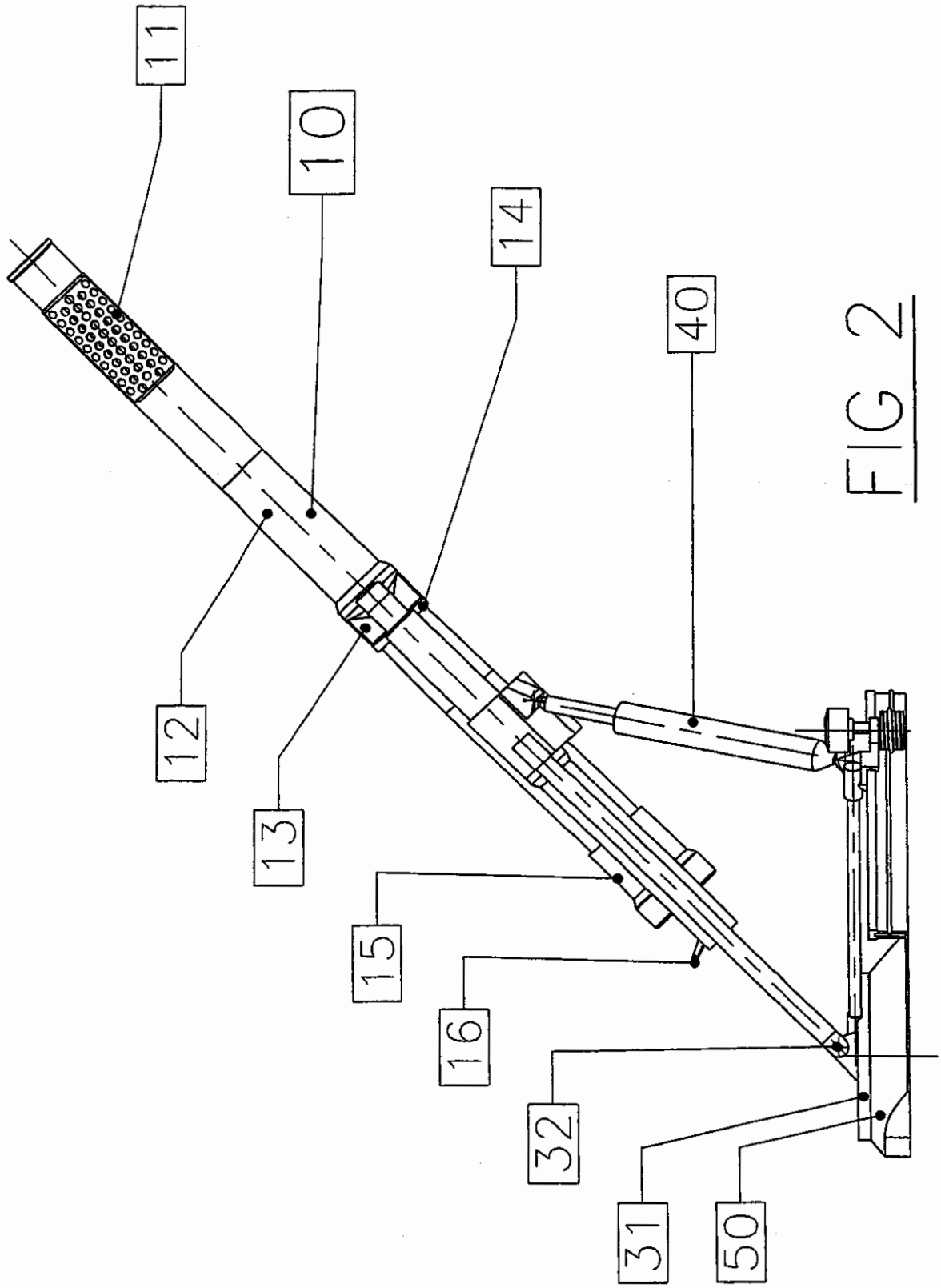

FIG 2

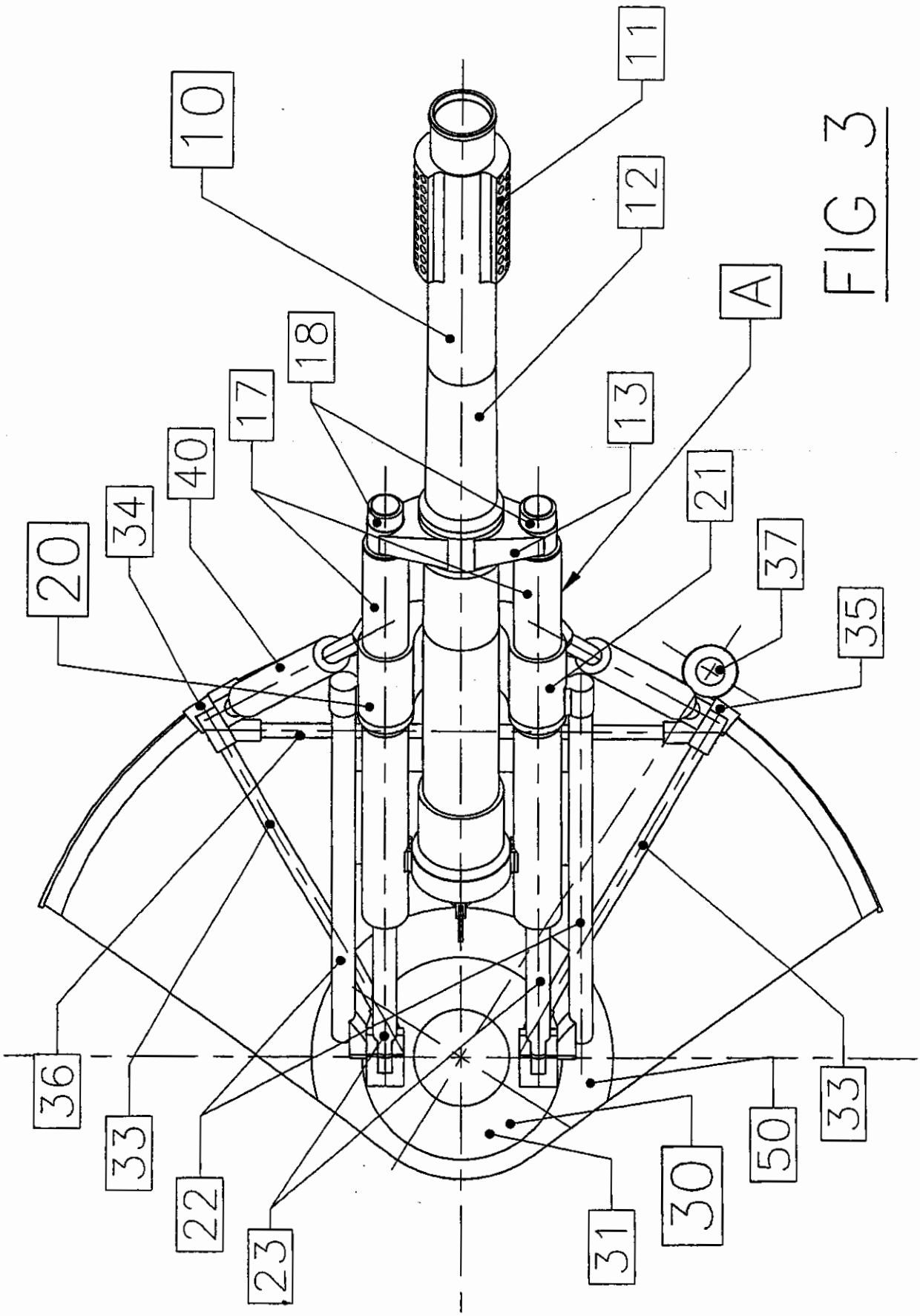

FIG 3

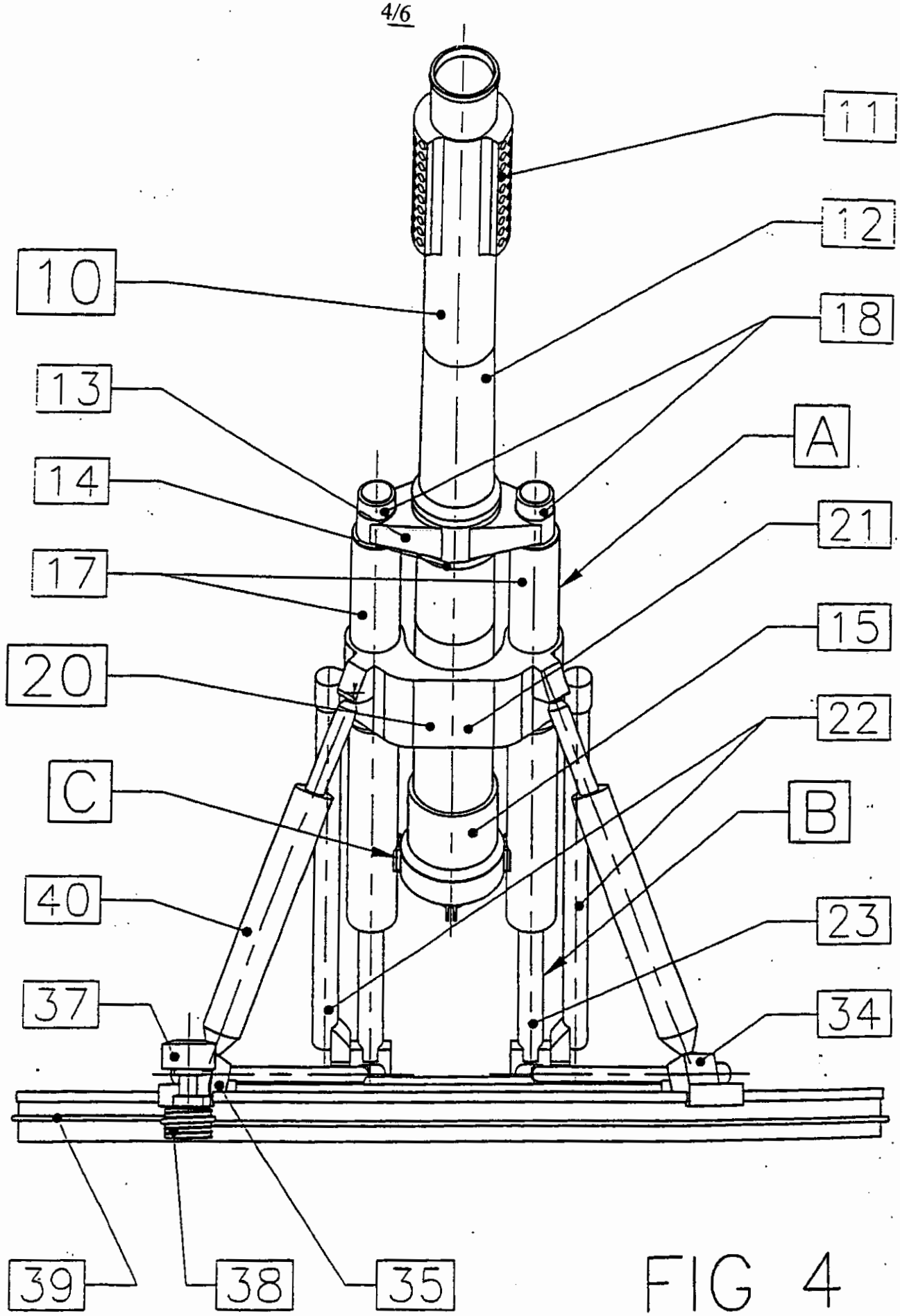

FIG 4

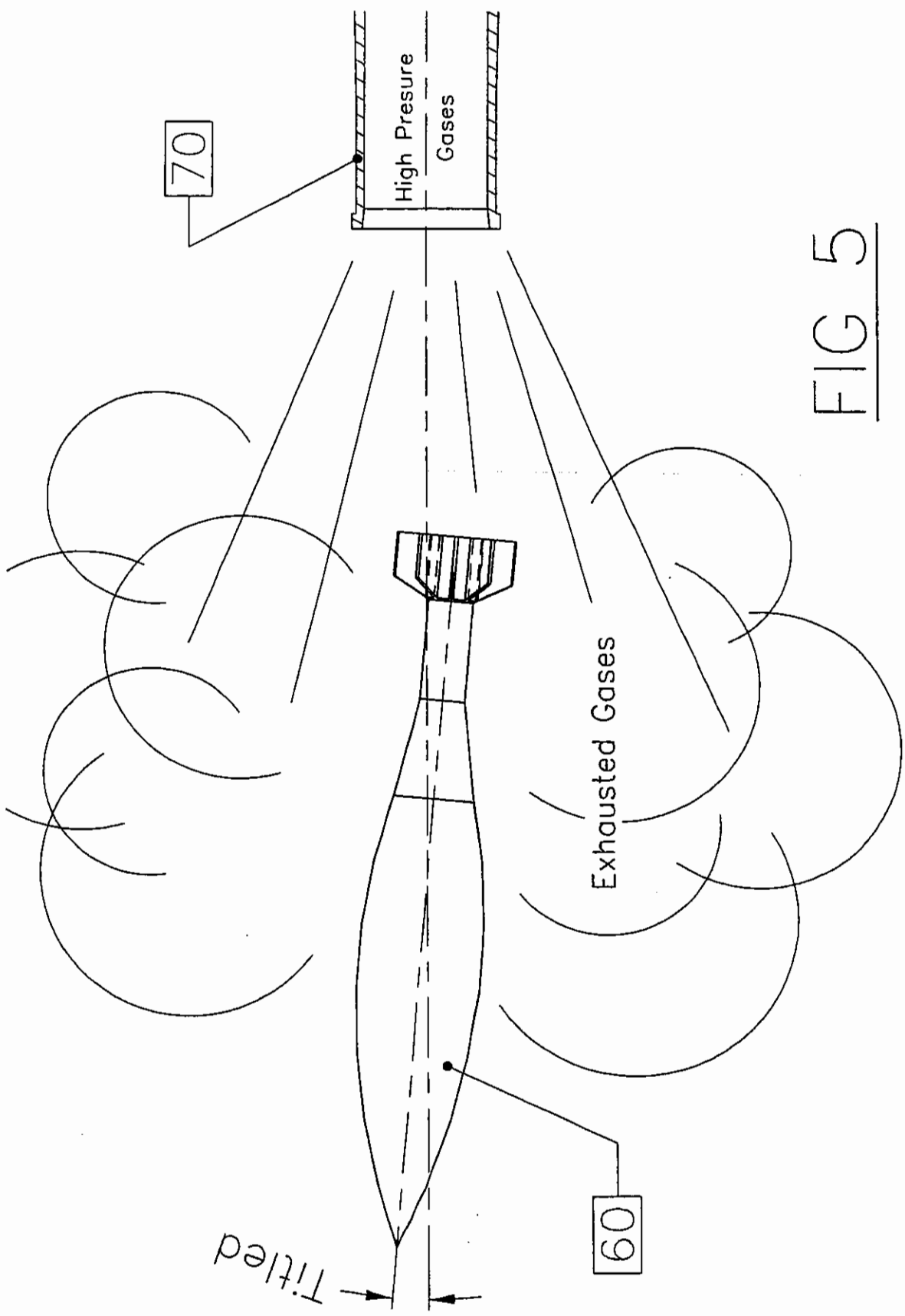

FIG 5

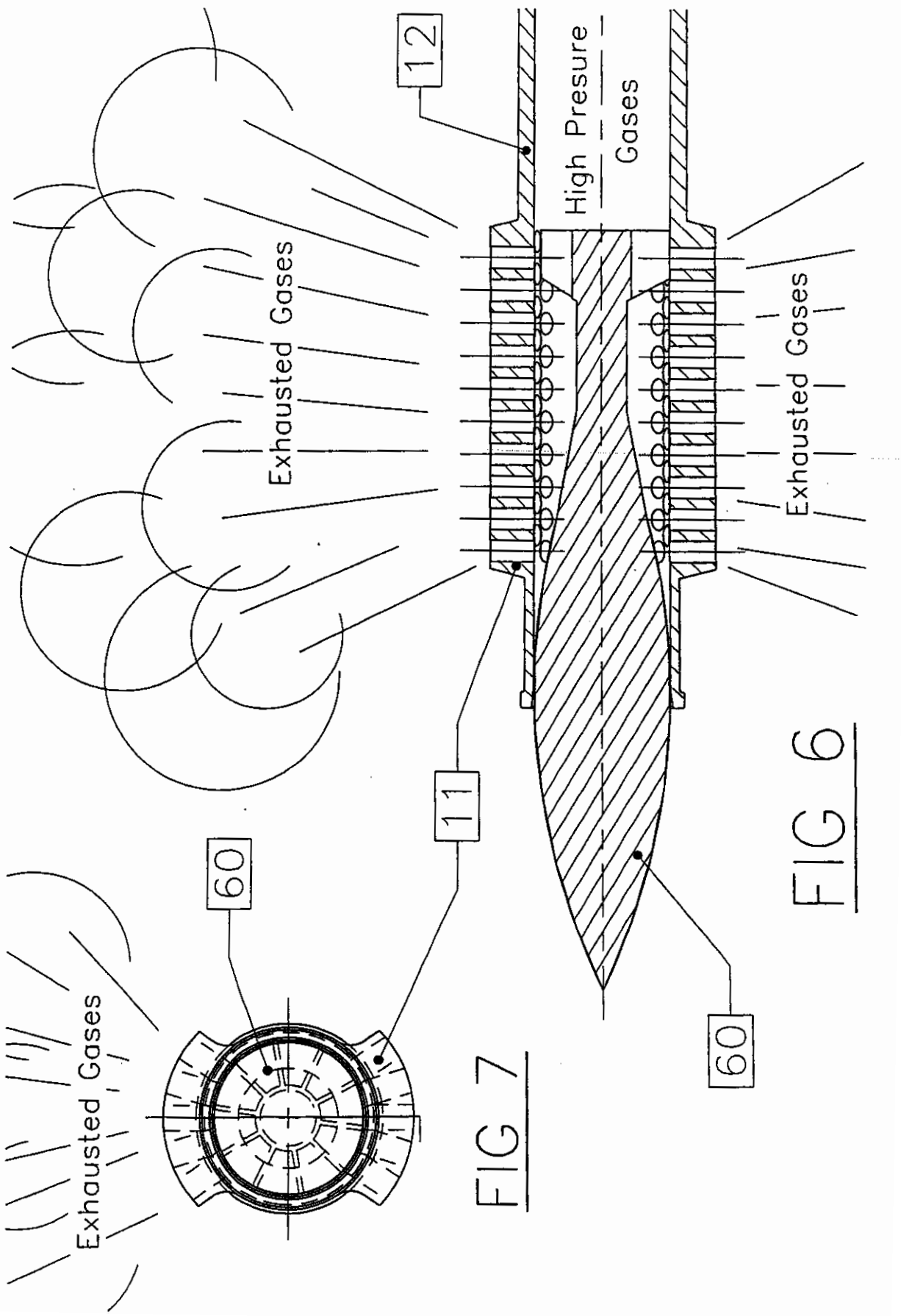
12
High Presure
Gases
Exhausted Gases
Exhausted Gases
11
60
60
Exhausted Gases

FIG 6

FIG 7