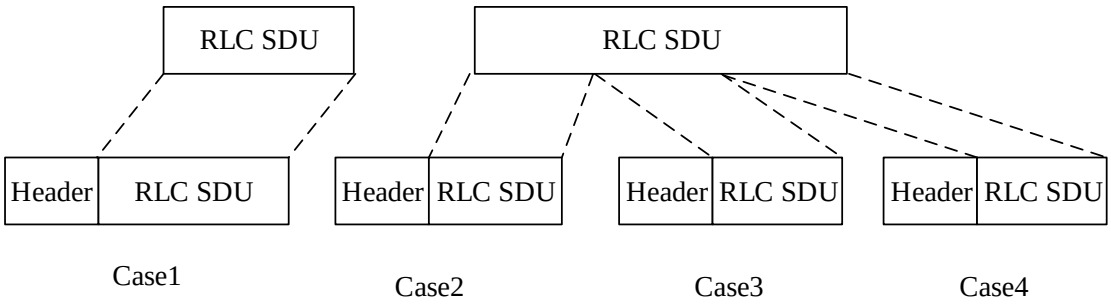
RLC SDU
RLC SDU
Header
RLC SDU
Header
RLC SDU
Header
RLC SDU
Header
RLC SDU
Case1
Case2
Case3
Case4

FIG. 1A

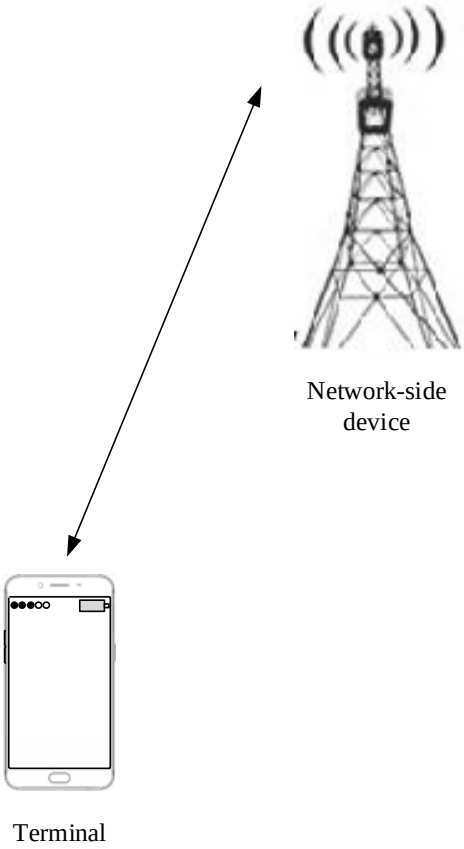
Network-side device
Terminal

FIG. 1B

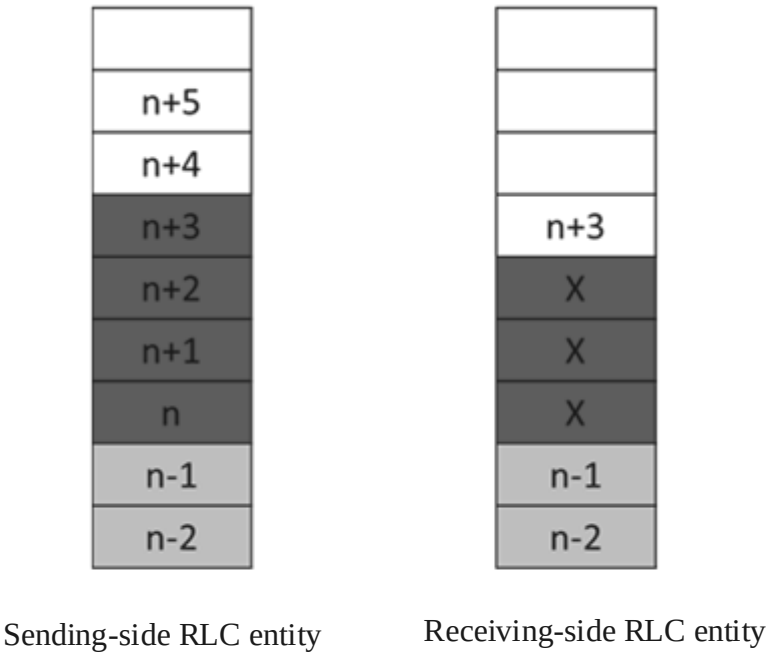

FIG. 1C

D/C	CPT			ACK_SN				Oct 1
ACK_SN								Oct 2
ACK_SN				E1	NACK_SN			Oct 3
NACK_SN								Oct 4
NACK_SN					E1	E2		Oct 5
NACK_SN								Oct 6
NACK_SN							E1	Oct 7
E2	SOstart							Oct 8
SOstart								Oct 9
	SOend							Oct 10
SOend								Oct 11
	NACK_SN							Oct 12
...								

FIG. 1D

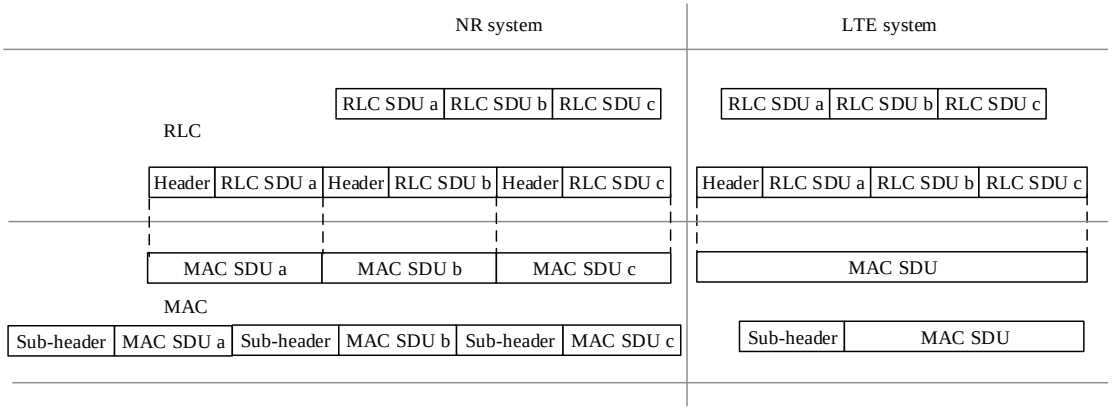
NR system
LTE system
RLC SDU a
RLC SDU b
RLC SDU c
RLC SDU a
RLC SDU b
RLC SDU c
RLC
Header
RLC SDU a
Header
RLC SDU b
Header
RLC SDU c
Header
RLC SDU a
RLC SDU b
RLC SDU c
MAC SDU a
MAC SDU b
MAC SDU c
MAC SDU
MAC
Sub-header
MAC SDU a
Sub-header
MAC SDU b
Sub-header
MAC SDU c
Sub-header
MAC SDU

FIG. 1E

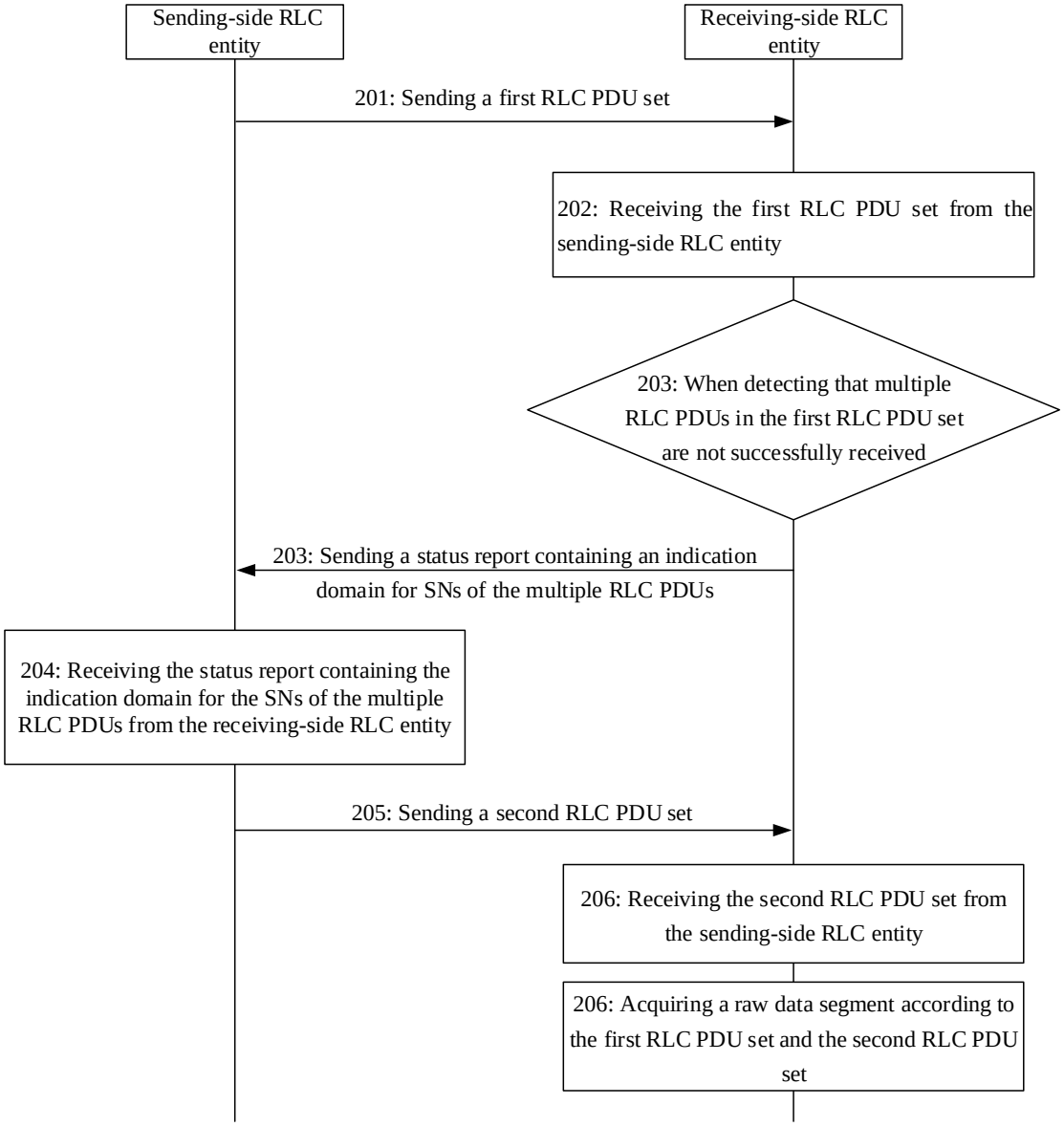
Sending-side RLC entity
Receiving-side RLC entity
201: Sending a first RLC PDU set
202: Receiving the first RLC PDU set from the sending-side RLC entity
203: When detecting that multiple RLC PDUs in the first RLC PDU set are not successfully received
203: Sending a status report containing an indication domain for SNs of the multiple RLC PDUs
204: Receiving the status report containing the indication domain for the SNs of the multiple RLC PDUs from the receiving-side RLC entity
205: Sending a second RLC PDU set
206: Receiving the second RLC PDU set from the sending-side RLC entity
206: Acquiring a raw data segment according to the first RLC PDU set and the second RLC PDU set

FIG. 2

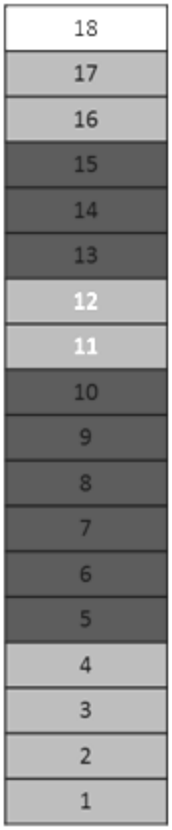
18
17
16
15
14
13
12
11
10
9
8
7
6
5
4
3
2
1

FIG. 3A

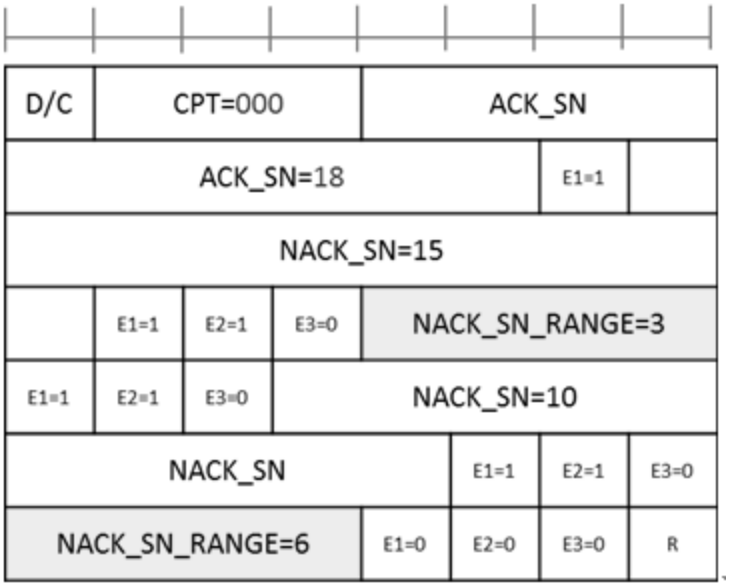
D/C
CPT=000
ACK_SN
ACK_SN=18
E1=1
NACK_SN=15
E1=1
E2=1
E3=0
NACK_SN_RANGE=3
E1=1
E2=1
E3=0
NACK_SN=10
NACK_SN
E1=1
E2=1
E3=0
NACK_SN_RANGE=6
E1=0
E2=0
E3=0
R

FIG. 3B

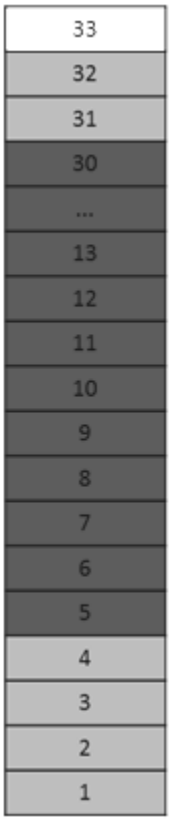
33
32
31
30
...
13
12
11
10
9
8
7
6
5
4
3
2
1

FIG. 3C

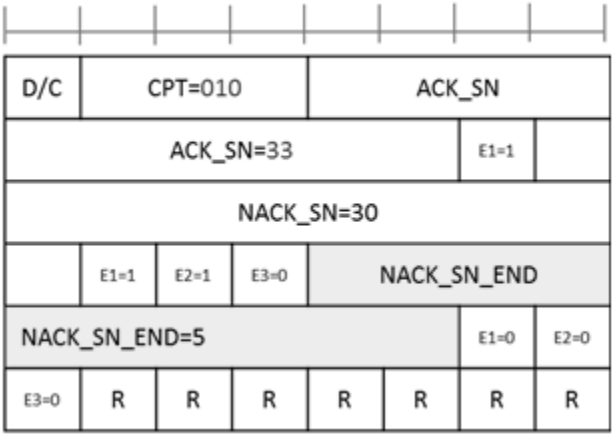
D/C
CPT=010
ACK_SN
ACK_SN=33
E1=1
NACK_SN=30
E1=1
E2=1
E3=0
NACK_SN_END
NACK_SN_END=5
E1=0
E2=0
E3=0
R
R
R
R
R
R
R

FIG. 3D

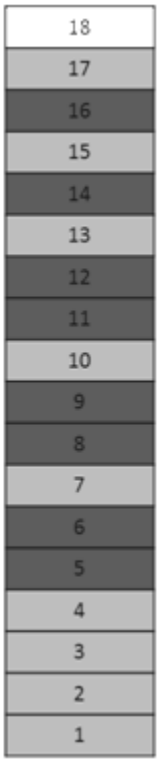
18
17
16
15
14
13
12
11
10
9
8
7
6
5
4
3
2
1

FIG. 3E

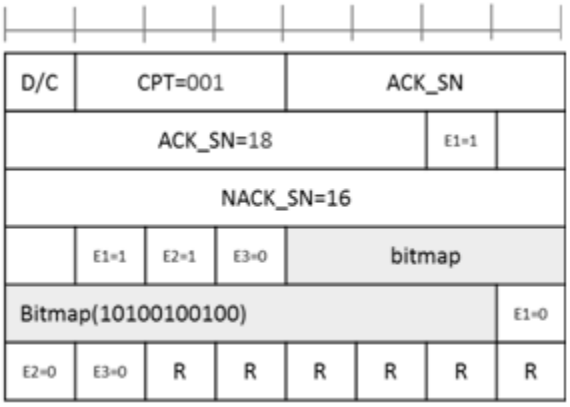
D/C
CPT=001
ACK_SN
ACK_SN=18
E1=1
NACK_SN=16
E1=1
E2=1
E3=0
bitmap
Bitmap(10100100100)
E1=0
E2=0
E3=0
R
R
R
R
R
R

FIG. 3F

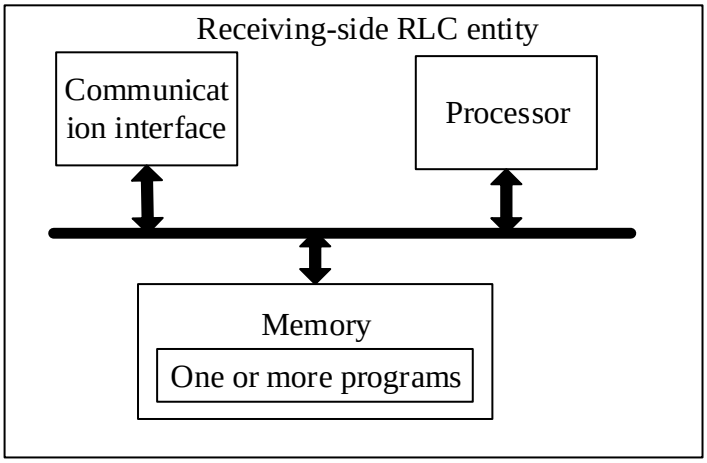

FIG. 4

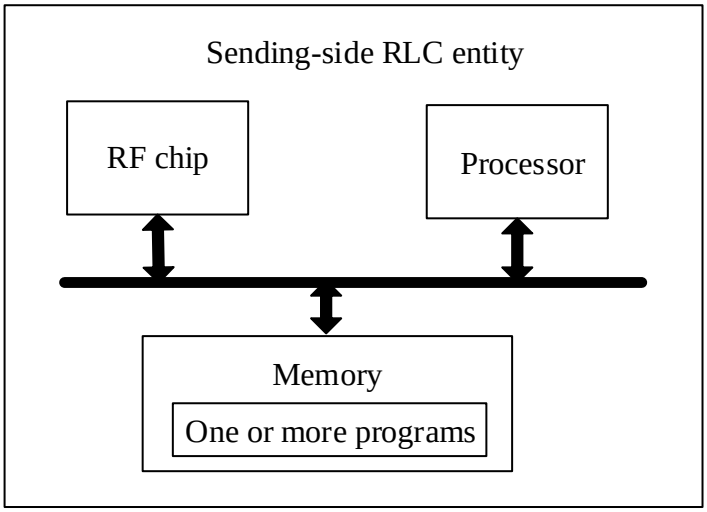

FIG. 5

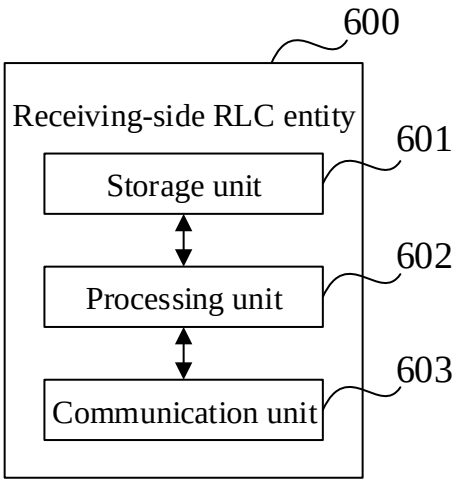

FIG. 6

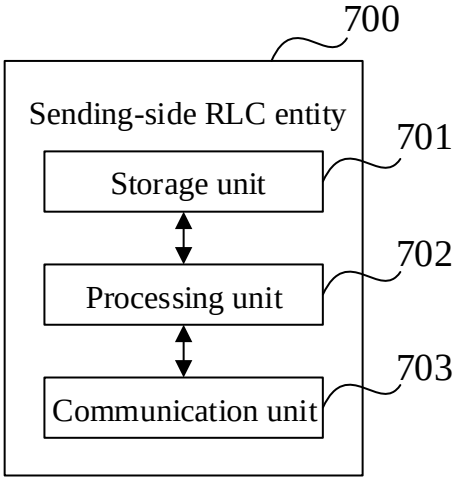
700
Sending-side RLC entity
701
Storage unit
702
Processing unit
703
Communication unit

FIG. 7

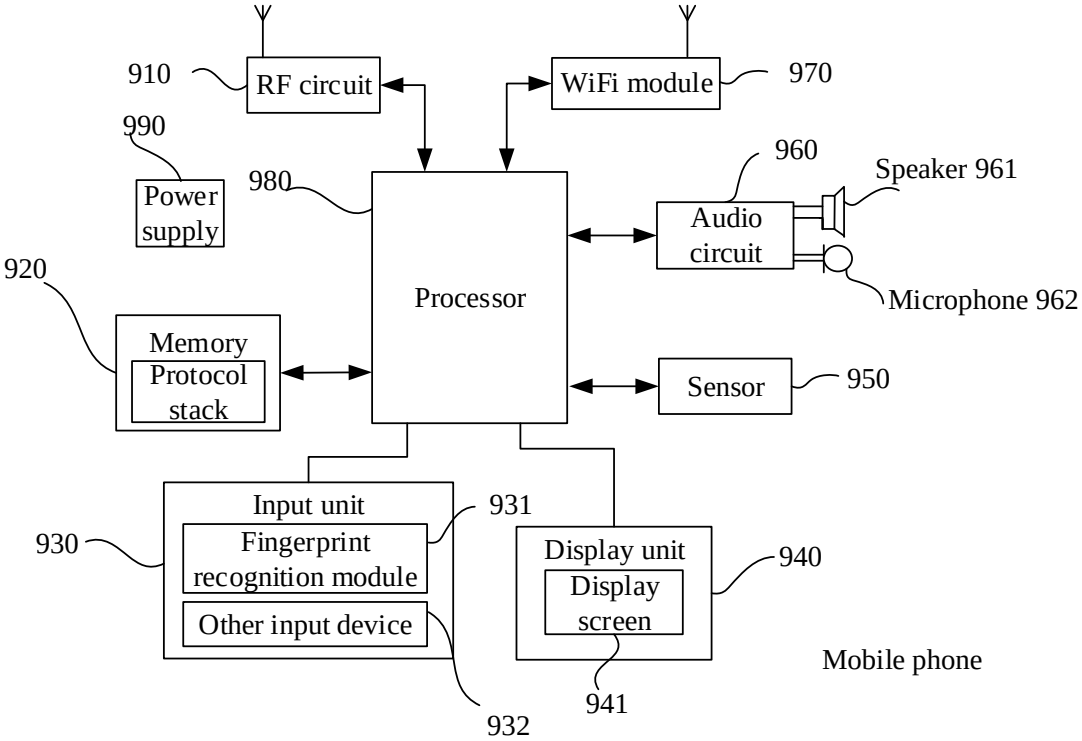
910
RF circuit
WiFi module
970
990
Power supply
980
960
Speaker 961
Audio circuit
Processor
Microphone 962
920
Memory
Protocol stack
Sensor
950
Input unit
931
930
Fingerprint recognition module
Other input device
Display unit
940
Display screen
Mobile phone
941
932

FIG. 8