(12) INTERNATIONAL APPLICATION PUBLISHED UNDER THE PATENT COOPERATION TREATY (PCT)

(19) World Intellectual Property Organization
International Bureau

(43) International Publication Date
21 February 2002 (21.02.2002)

PCT

(10) International Publication Number
WO 02/013970 A3

(51) International Patent Classification[7]: G01N 35/00, B01L 3/00, G01N 33/52, F04B 43/04, 43/02

(21) International Application Number: PCT/US01/23531

(22) International Filing Date: 26 July 2001 (26.07.2001)

(25) Filing Language: English

(26) Publication Language: English

(30) Priority Data:
09/637,504 11 August 2000 (11.08.2000) US

(71) Applicant: LIFESCAN, INC. [US/US]; 1000 Gibraltar Drive, Milpitas, CA 95035-6312 (US).

(72) Inventors: HOUSE, Allen; 421 Sutton Circle, Danville, CA 94506 (US). OLSON, Lorin; 1230 Mt. Hermon Road, Scotts Valley, CA 95066 (US).

(74) Agent: FIELD, Bret, E.; Bozicevic, Field & Francis, LLP, Suite 200, 200 Middlefield Road, Menlo Park, CA 94025 (US).

(81) Designated States *(national)*: AE, AG, AL, AM, AT, AU, AZ, BA, BB, BG, BR, BY, BZ, CA, CH, CN, CO, CR, CU, CZ, DE, DK, DM, DZ, EC, EE, ES, FI, GB, GD, GE, GH, GM, HR, HU, ID, IL, IN, IS, JP, KE, KG, KP, KR, KZ, LC, LK, LR, LS, LT, LU, LV, MA, MD, MG, MK, MN, MW, MX, MZ, NO, NZ, PL, PT, RO, RU, SD, SE, SG, SI, SK, SL, TJ, TM, TR, TT, TZ, UA, UG, UZ, VN, YU, ZA, ZW.

(84) Designated States *(regional)*: ARIPO patent (GH, GM, KE, LS, MW, MZ, SD, SL, SZ, TZ, UG, ZW), Eurasian patent (AM, AZ, BY, KG, KZ, MD, RU, TJ, TM), European patent (AT, BE, CH, CY, DE, DK, ES, FI, FR, GB, GR, IE, IT, LU, MC, NL, PT, SE, TR), OAPI patent (BF, BJ, CF, CG, CI, CM, GA, GN, GQ, GW, ML, MR, NE, SN, TD, TG).

Published:
— *with international search report*
— *before the expiration of the time limit for amending the claims and to be republished in the event of receipt of amendments*

(88) Date of publication of the international search report:
4 July 2002

For two-letter codes and other abbreviations, refer to the "Guidance Notes on Codes and Abbreviations" appearing at the beginning of each regular issue of the PCT Gazette.

(54) Title: GIMBALED BLADDER ACTUATOR FOR USE WITH TEST STRIPS

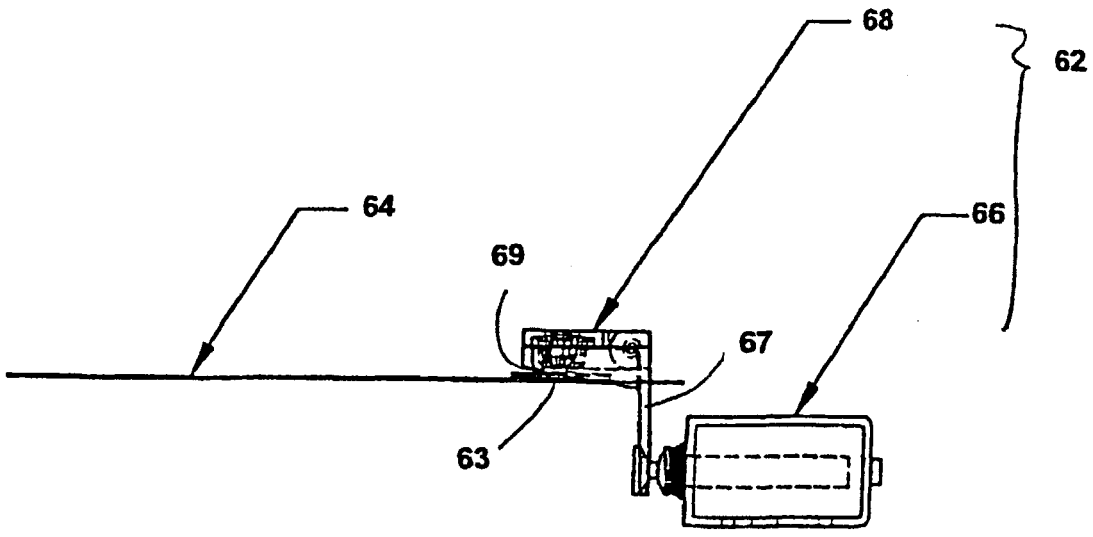

(57) Abstract: Gimbaled bladder actuators and methods for their use in compressing bladders present on test strips are provided. The subject actuators are characterized by the presence of a gimbaled compression pad (69) under movement control of an actuating means, preferably an automated actuating means (66, 68). Also provided are meters for reading test strips that include bladders, where the meters include the subject gimbaled bladder actuators.

WO 02/013970 A3