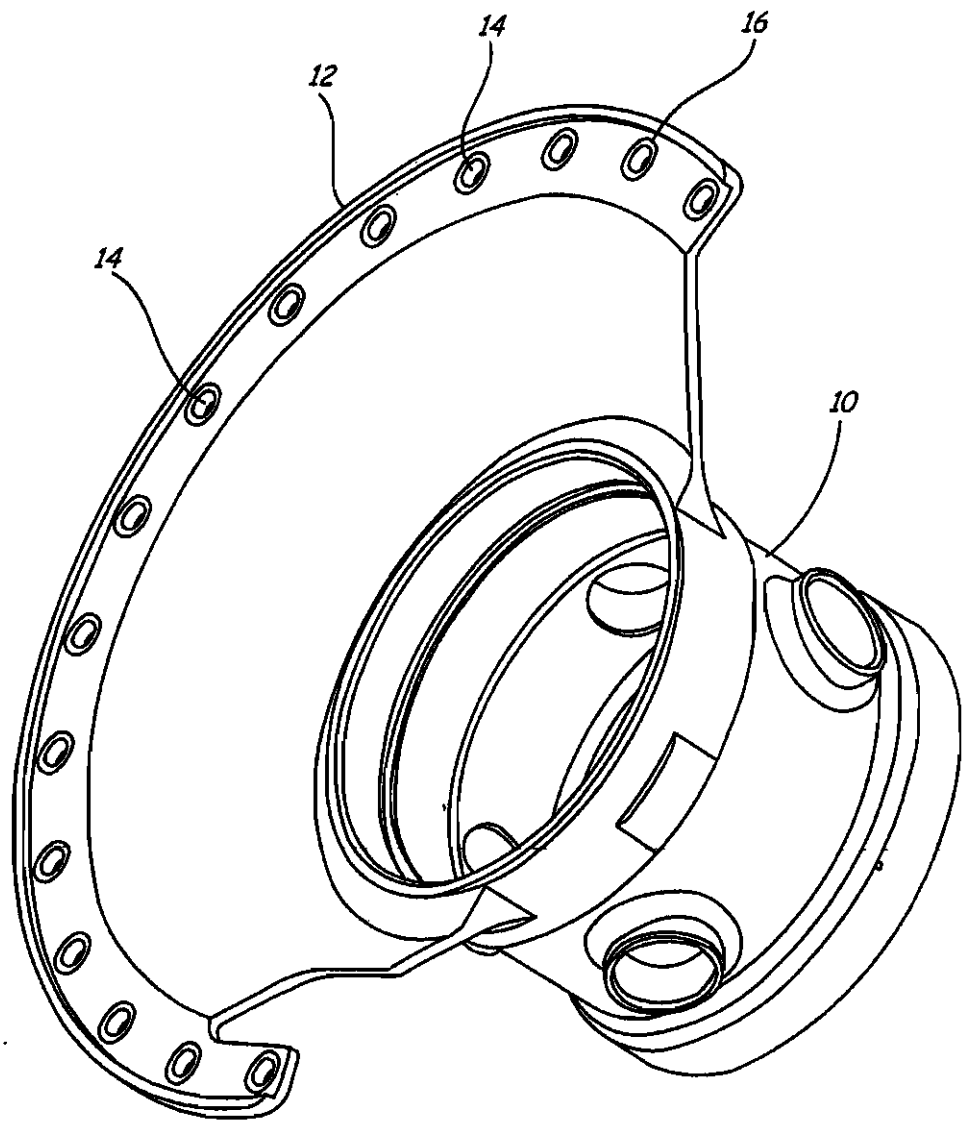

FIG. 1

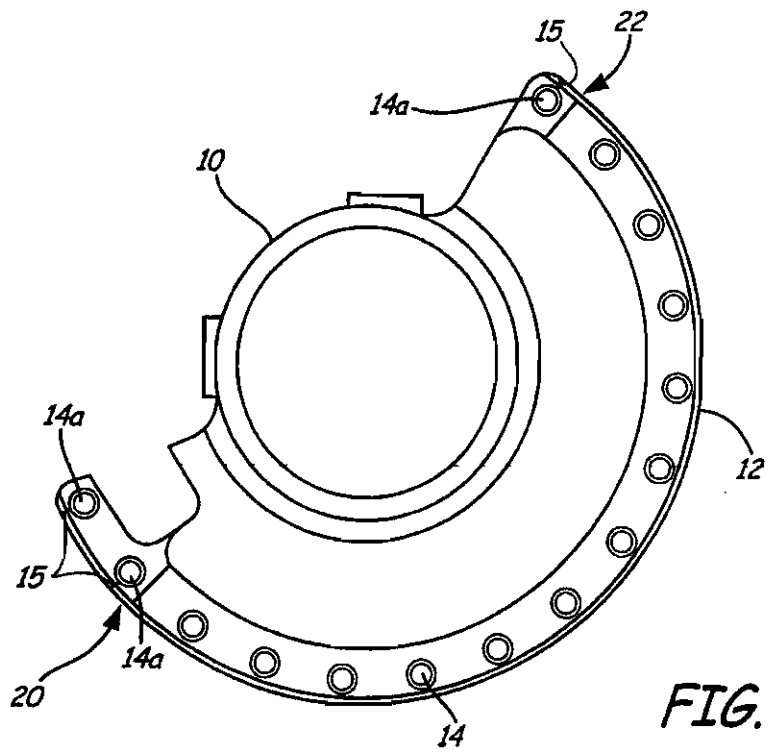

FIG. 2

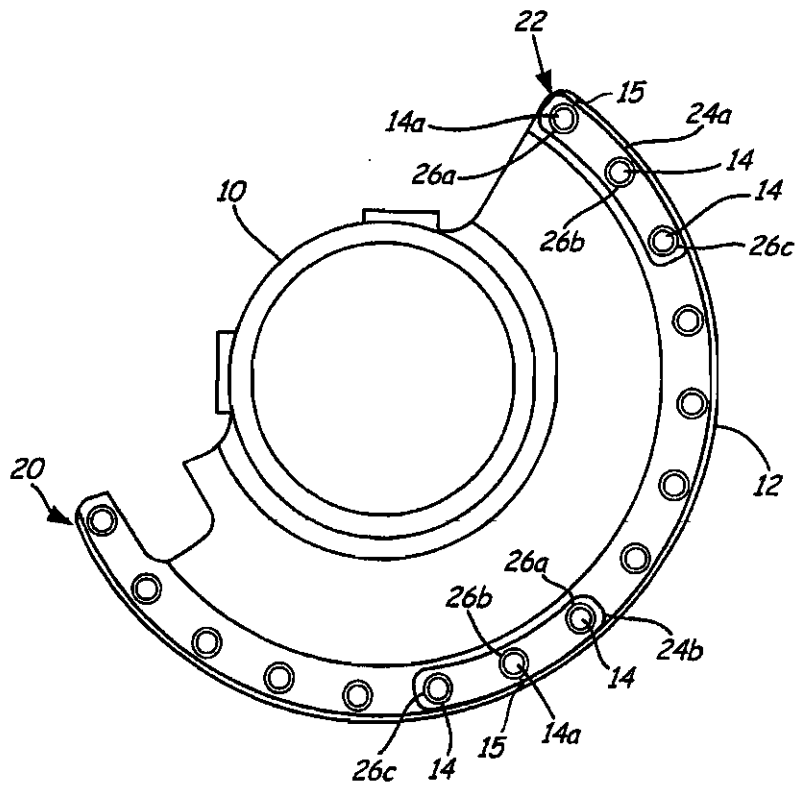
22
15
14a
24a
14
26a
14
10
26b
26c
20
12
26a
26b
24b
14
14a
15
26c
14

FIG. 3

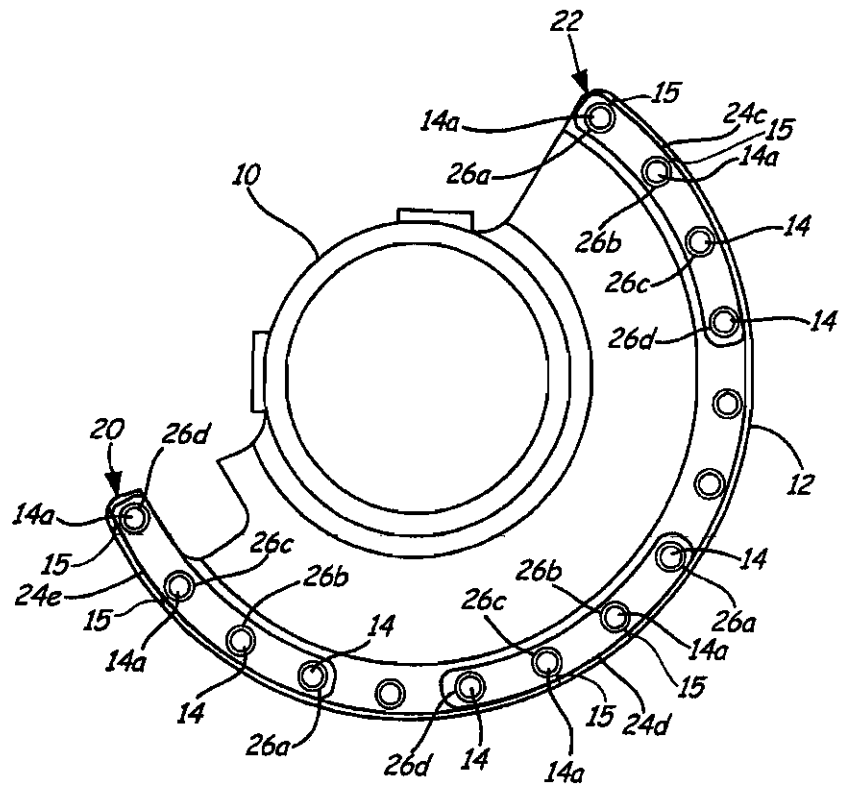
22
15
14a
24c
15
14a
26a
10
26b
14
26c
14
26d
12
20
26d
14a
26c
15
24e
26b
15
14a
14
14
26a
26d
14
14a
15
24d
15
14a
26b
26c
14
26a

FIG. 4

FIG.5A

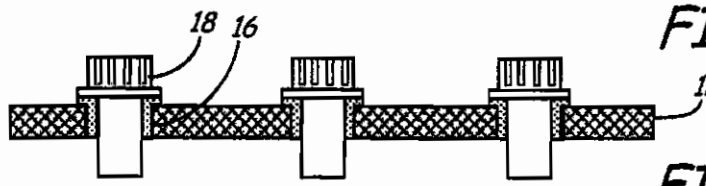

FIG. 5B

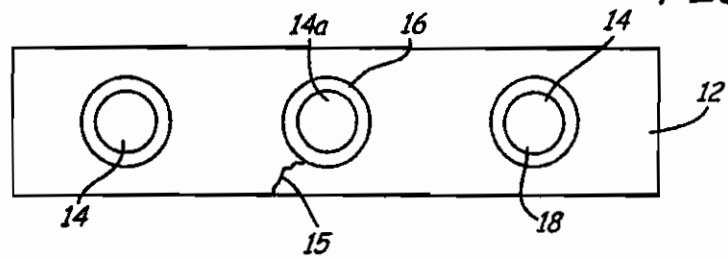

FIG. 6A

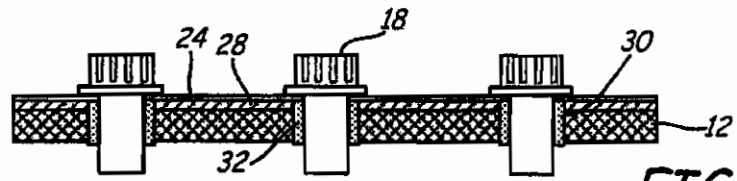

FIG. 6B

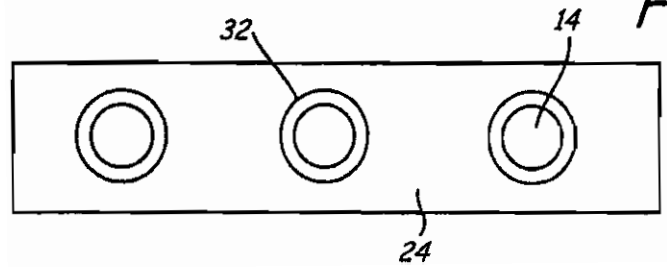

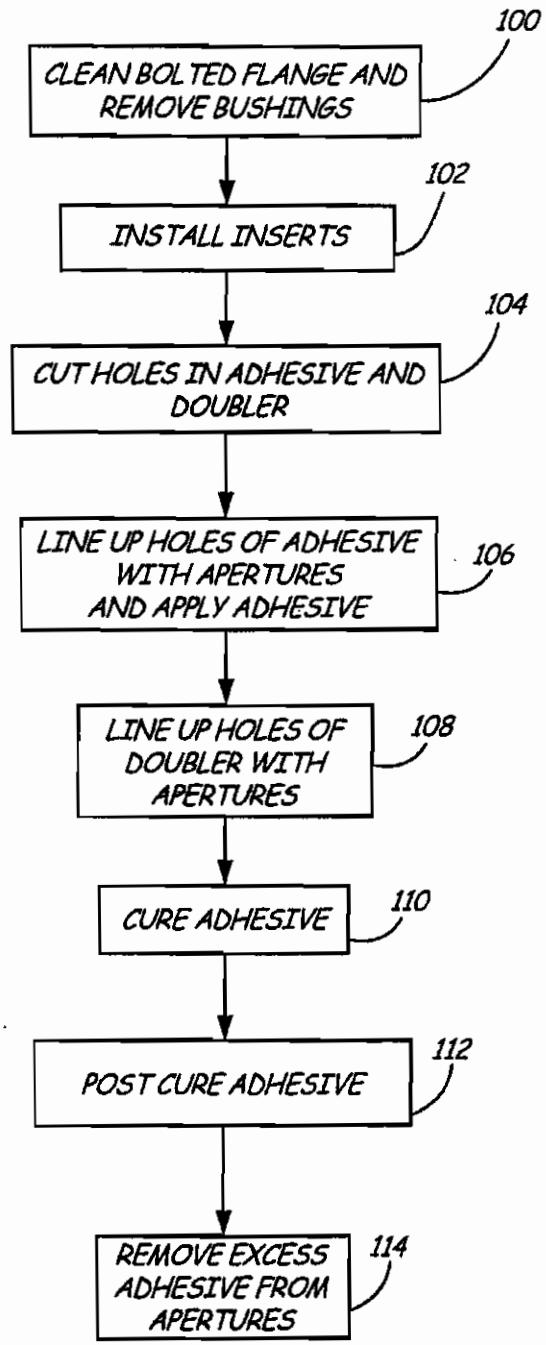
100
CLEAN BOLTED FLANGE AND REMOVE BUSHINGS
102
INSTALL INSERTS
104
CUT HOLES IN ADHESIVE AND DOUBLER
106
LINE UP HOLES OF ADHESIVE WITH APERTURES AND APPLY ADHESIVE
108
LINE UP HOLES OF DOUBLER WITH APERTURES
110
CURE ADHESIVE
112
POST CURE ADHESIVE
114
REMOVE EXCESS ADHESIVE FROM APERTURES

FIG. 7