Fig.1

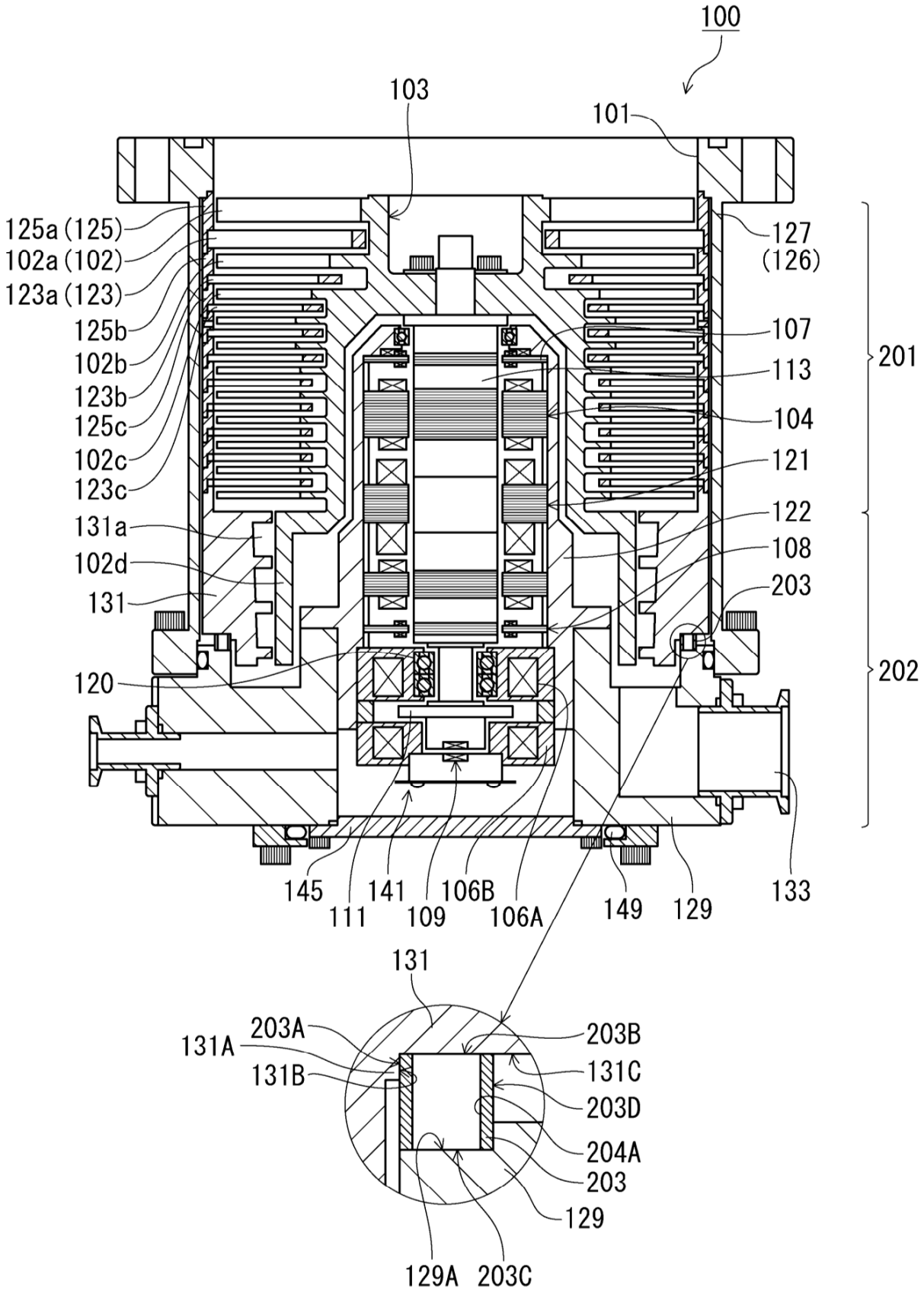
100
103
101
125a (125)
102a (102)
123a (123)
125b
102b
123b
125c
102c
123c
131a
102d
131
120
127
(126)
107
113
104
121
122
108
203
201
202
145
111
141
109
106B
106A
149
129
133
131
131A
203A
131B
203B
131C
203D
204A
203
129
129A
203C

Fig.2

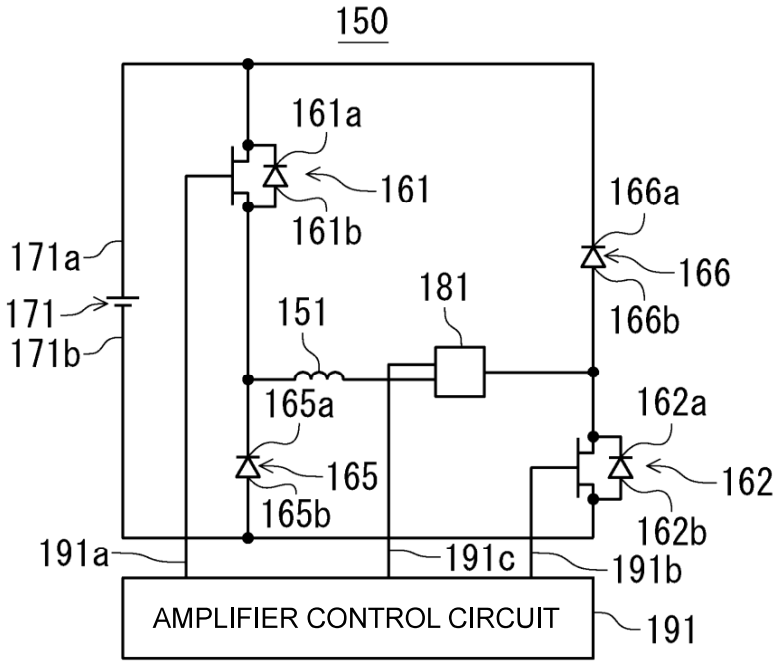
150
161a
161
161b
166a
166
166b
171a
171
171b
181
151
165a
162a
165
162
165b
162b
191a
191c
191b
AMPLIFIER CONTROL CIRCUIT
191

Fig.3

TIME CHART SHOWING CONTROL PERFORMED WHEN CURRENT COMMAND VALUE IS GREATER THAN DETECTED VALUE

《CURRENT INCREASE CASE》

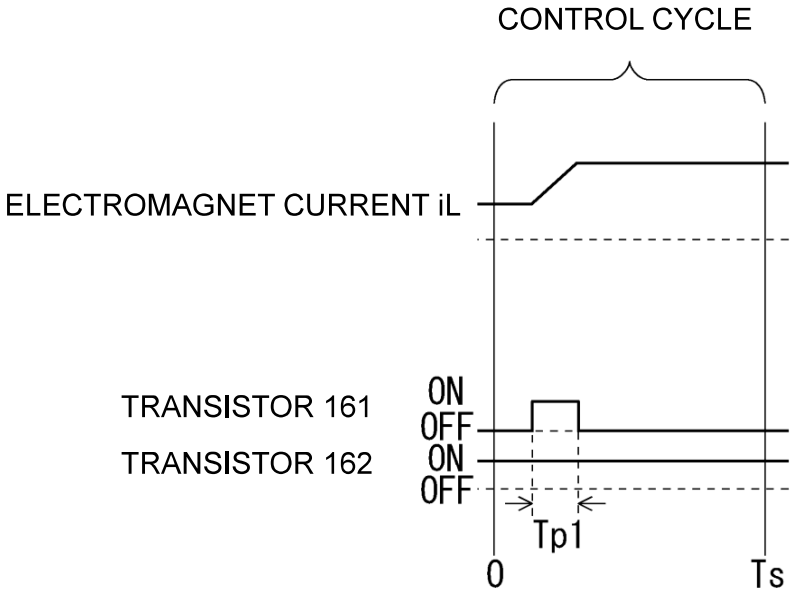

Fig.4

TIME CHART SHOWING CONTROL PERFORMED WHEN CURRENT COMMAND VALUE IS LESS THAN DETECTED VALUE

《CURRENT DECREASE CASE》

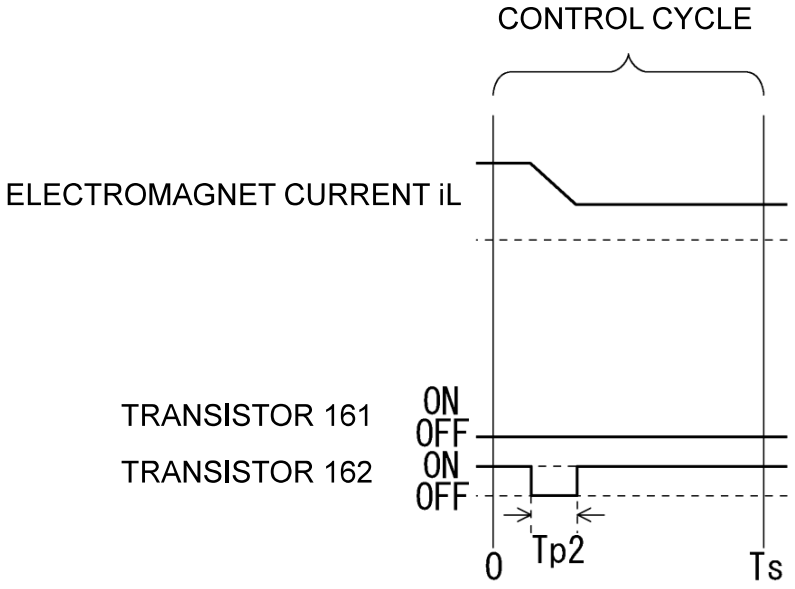

Fig.5

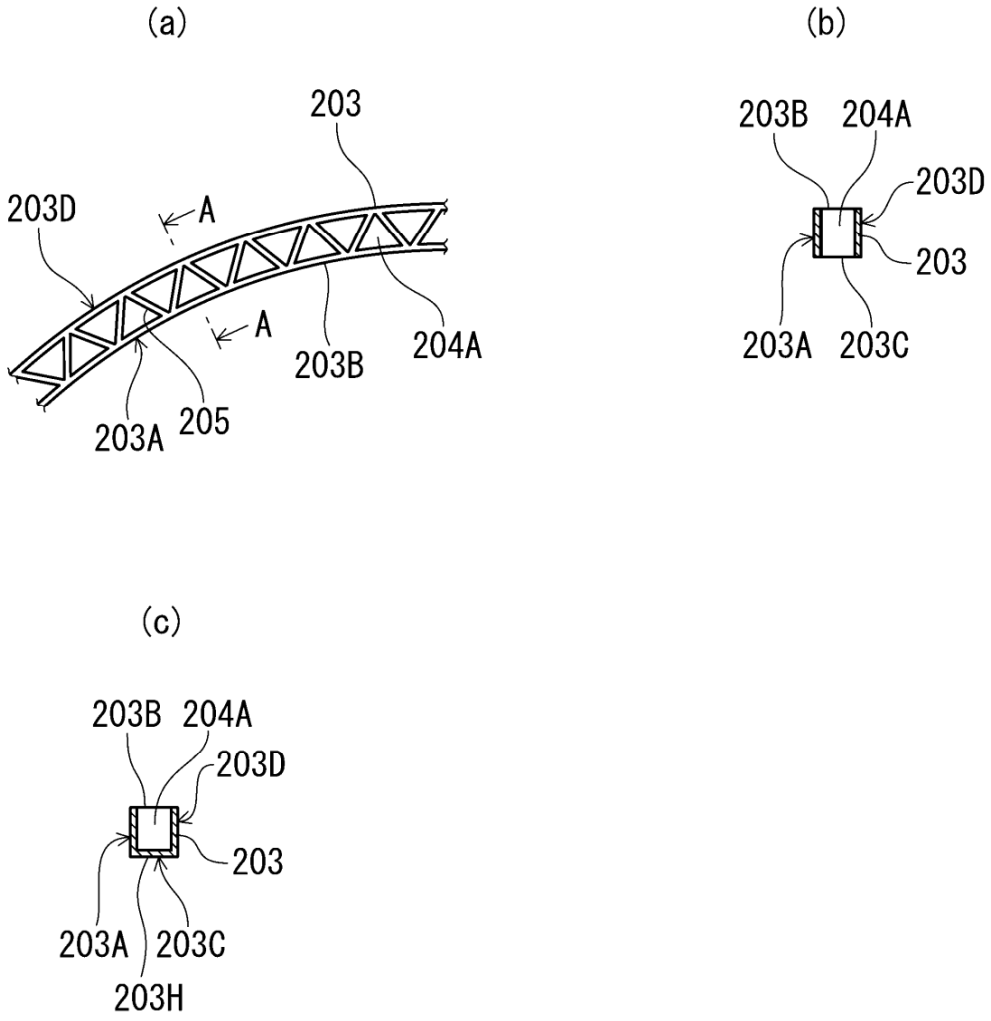
(a)
203
203D
A
A
203B
204A
203A
205
(b)
203B
204A
203D
203
203A
203C
(c)
203B
204A
203D
203
203A
203C
203H

Fig.6

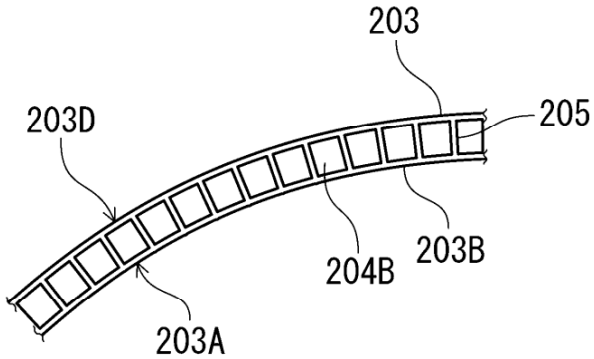
203
205
203D
204B
203B
203A

Fig.7

(a) SOLID PLATE

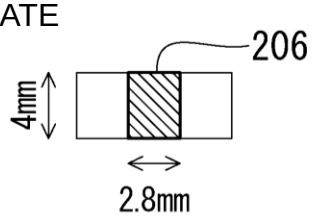

SECOND MOMENT OF AREA (I) = 1/12 x 2.8 x 4^3 = 15.0 mm^4 (EXPRESSION 1)

CROSS-SECTIONAL AREA (S) = 2.8 x 4 = 11.2 mm^2 (EXPRESSION 2)

(b) HOLLOW PLATE

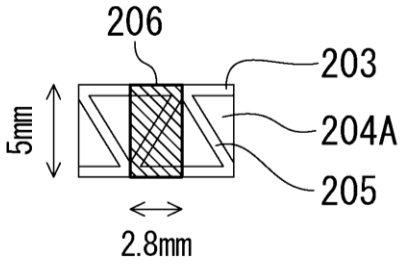

SECOND MOMENT OF AREA (I) = 1/12 x (2.8 x 5^3 – 2.3 x 4^3) = 16.9 mm^4 (EXPRESSION 3)

CROSS-SECTIONAL AREA (S) = 2.8 x 5 – 2.3 x 4 = 4.8 mm^2 (EXPRESSION 4)

(c) HOLLOW PLATE

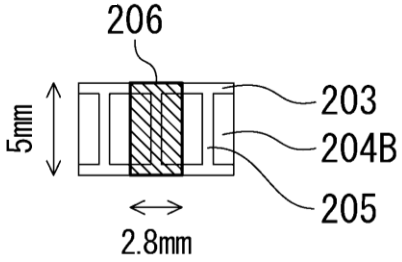

SECOND MOMENT OF AREA (I) = 1/12 x (2.8 x 5^3 – 2.3 x 4^3) = 16.9 mm^4 (EXPRESSION 3)

CROSS-SECTIONAL AREA (S) = 2.8 x 5 – 2.3 x 4 = 4.8 mm^2 (EXPRESSION 4)

Fig.8

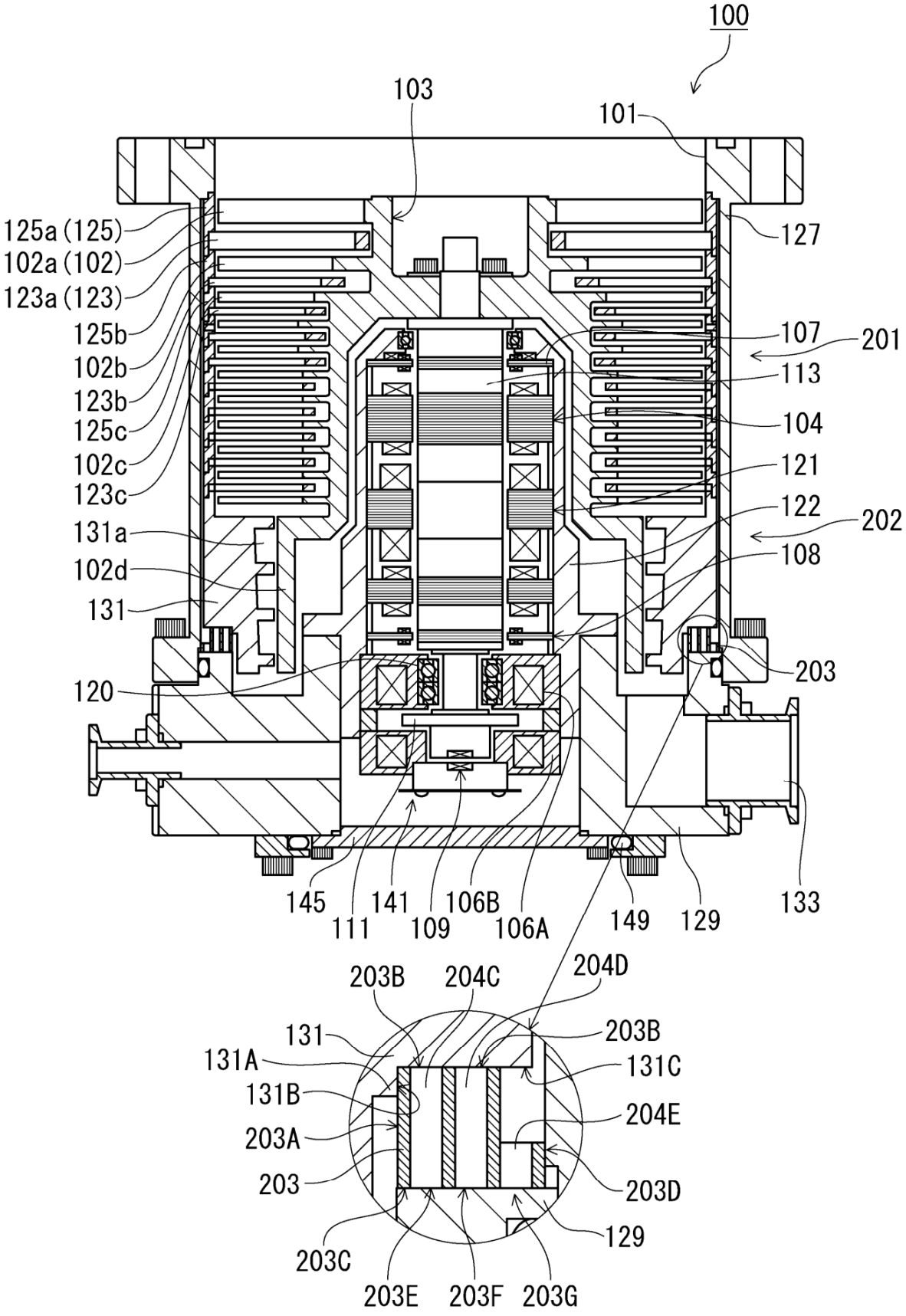
100
103
101
125a (125)
102a (102)
123a (123)
125b
102b
123b
125c
102c
123c
131a
102d
131
120
127
107
201
113
104
121
122
202
108
203
145
111
141
109
106B
106A
149
129
133
203B
204C
204D
131
131A
131B
203A
203
203C
203E
203F
203G
203B
131C
204E
203D
129

Fig.9

(a)

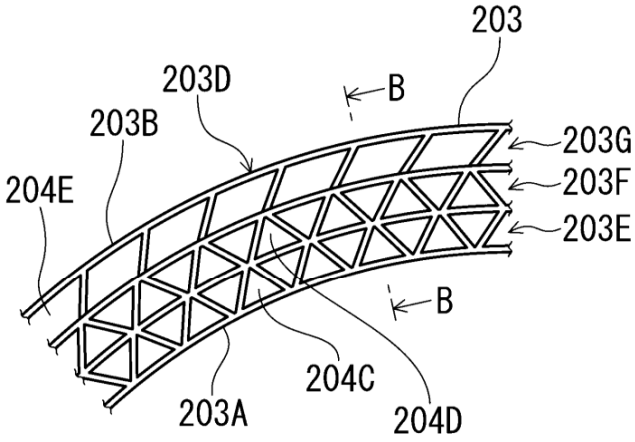
203
203D
B
203B
203G
203F
204E
203E
B
204C
203A
204D

(b)

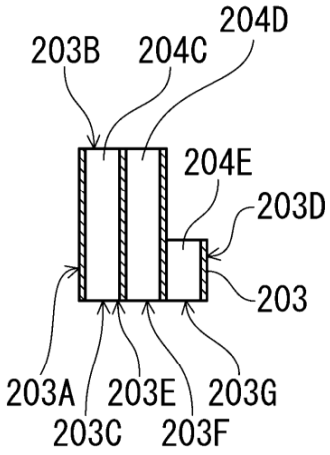
204D
203B
204C
204E
203D
203
203A
203E
203G
203C
203F

(c)

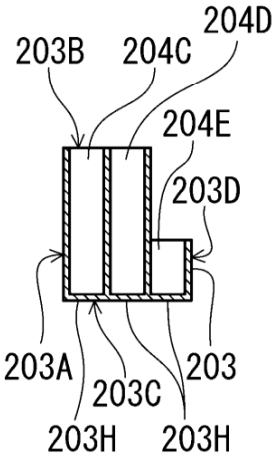
204D
203B
204C
204E
203D
203A
203
203C
203H
203H

Fig.10

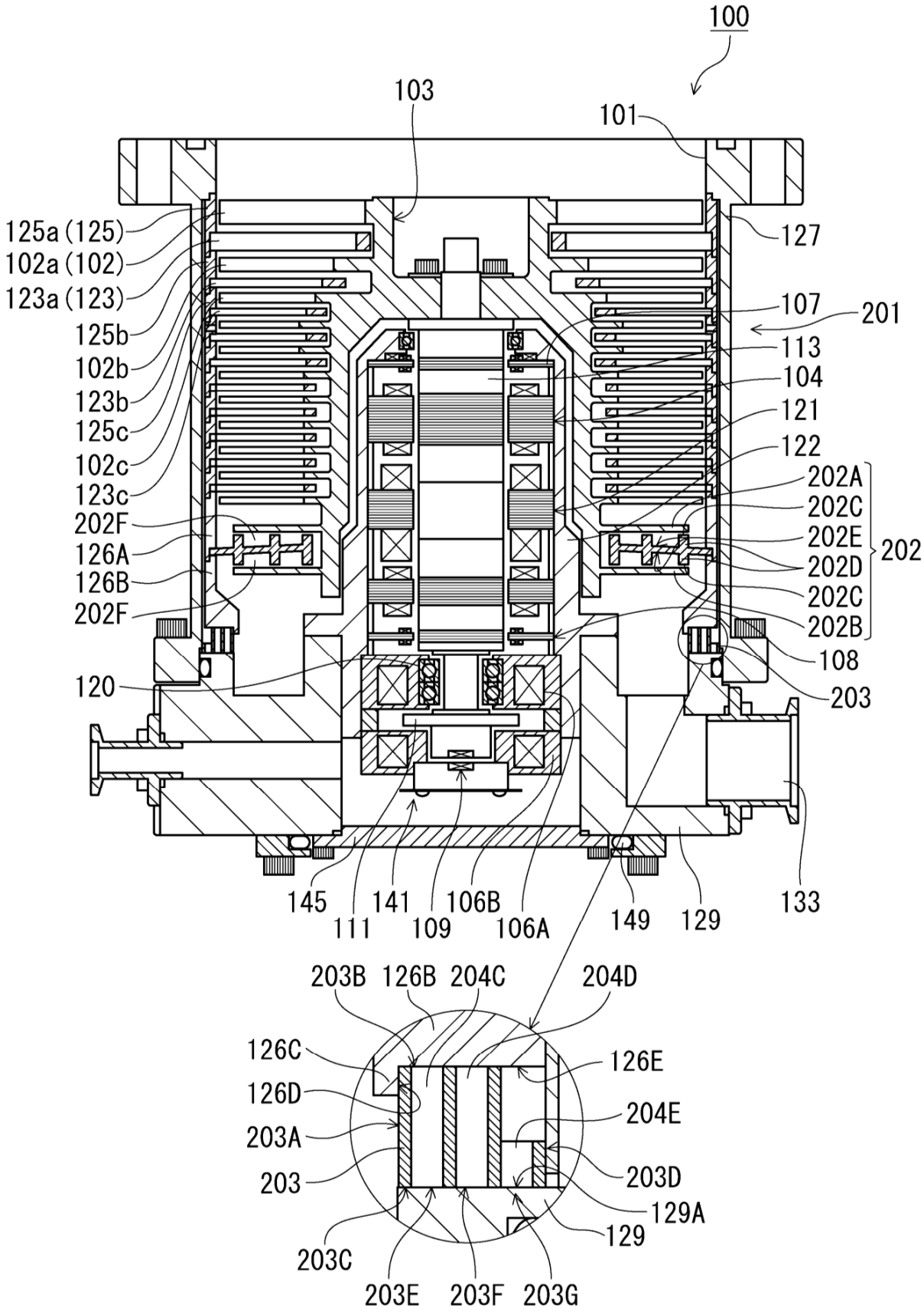
100
103
101
125a (125)
102a (102)
123a (123)
125b
102b
123b
125c
102c
123c
202F
126A
126B
202F
120
127
107
201
113
104
121
122
202A
202C
202E
202D
202C
202B
202
108
203
145
111
141
109
106B
106A
149
129
133
203B
126B
204C
204D
126C
126D
203A
203
203C
203E
203F
203G
126E
204E
203D
129A
129