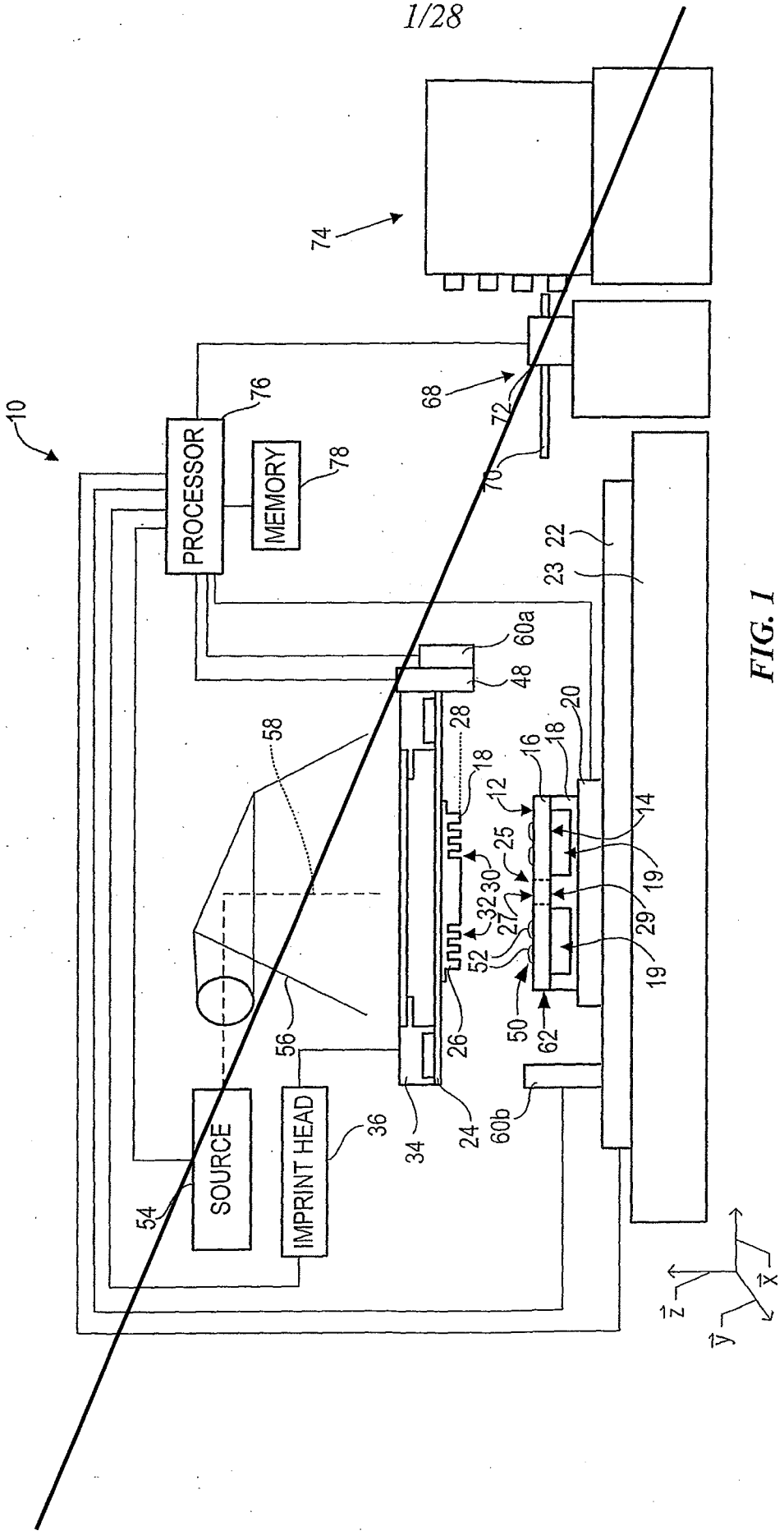
PROCESSOR
MEMORY
SOURCE
IMPRINT HEAD
10
12
14
16
18
19
20
22
23
24
25
26
27
28
29
30
32
34
36
48
50
52
54
56
58
60a
60b
62
68
70
72
74
76
78
x
y
z

FIG. 1

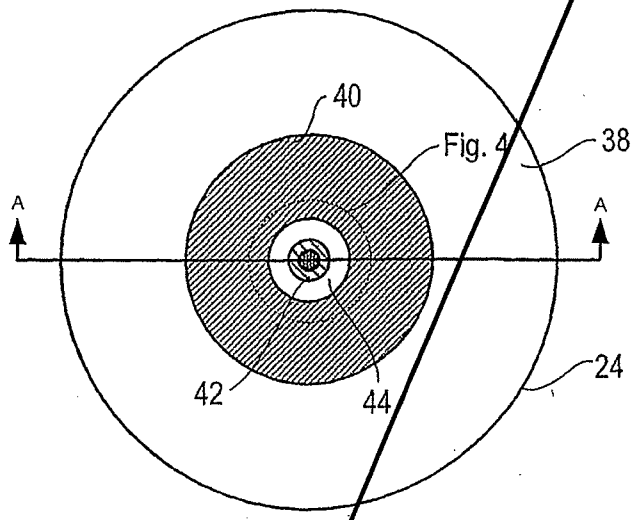

FIG. 2

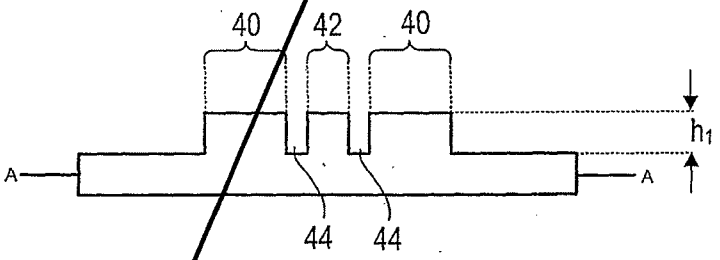

FIG. 3

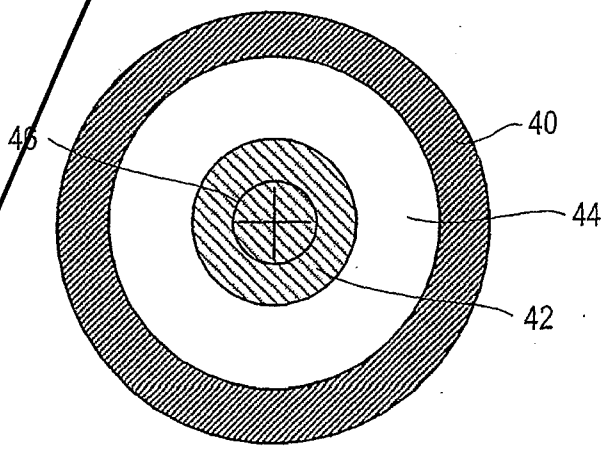

FIG. 4

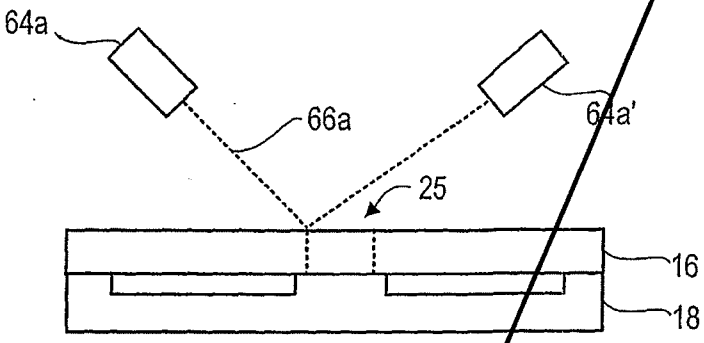

FIG. 5

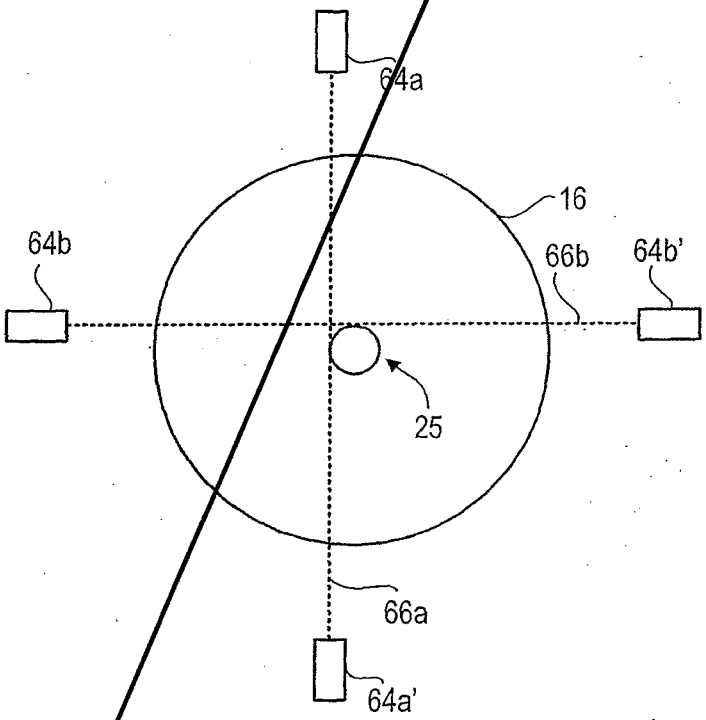

FIG. 6

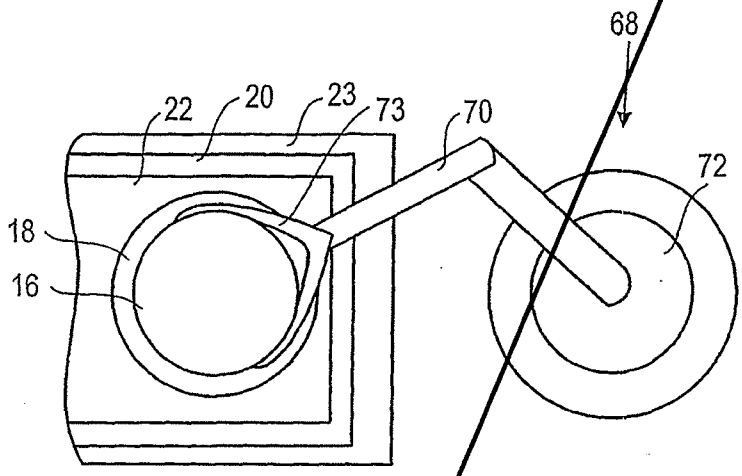

FIG. 7

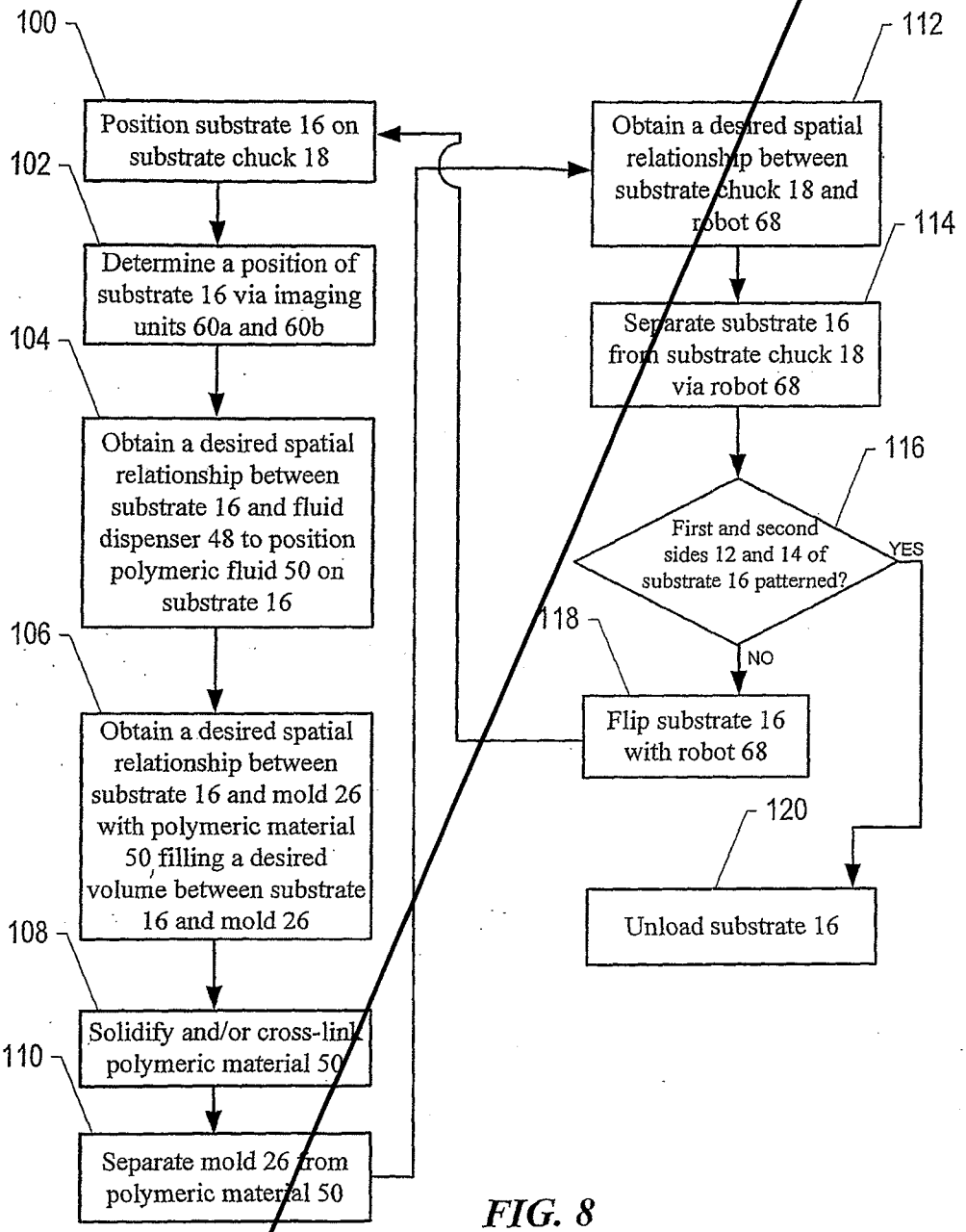
100
Position substrate 16 on substrate chuck 18
102
Determine a position of substrate 16 via imaging units 60a and 60b
104
Obtain a desired spatial relationship between substrate 16 and fluid dispenser 48 to position polymeric fluid 50 on substrate 16
106
Obtain a desired spatial relationship between substrate 16 and mold 26 with polymeric material 50 filling a desired volume between substrate 16 and mold 26
108
Solidify and/or cross-link polymeric material 50
110
Separate mold 26 from polymeric material 50
112
Obtain a desired spatial relationship between substrate chuck 18 and robot 68
114
Separate substrate 16 from substrate chuck 18 via robot 68
116
First and second sides 12 and 14 of substrate 16 patterned?
YES
NO
118
Flip substrate 16 with robot 68
120
Unload substrate 16

FIG. 8

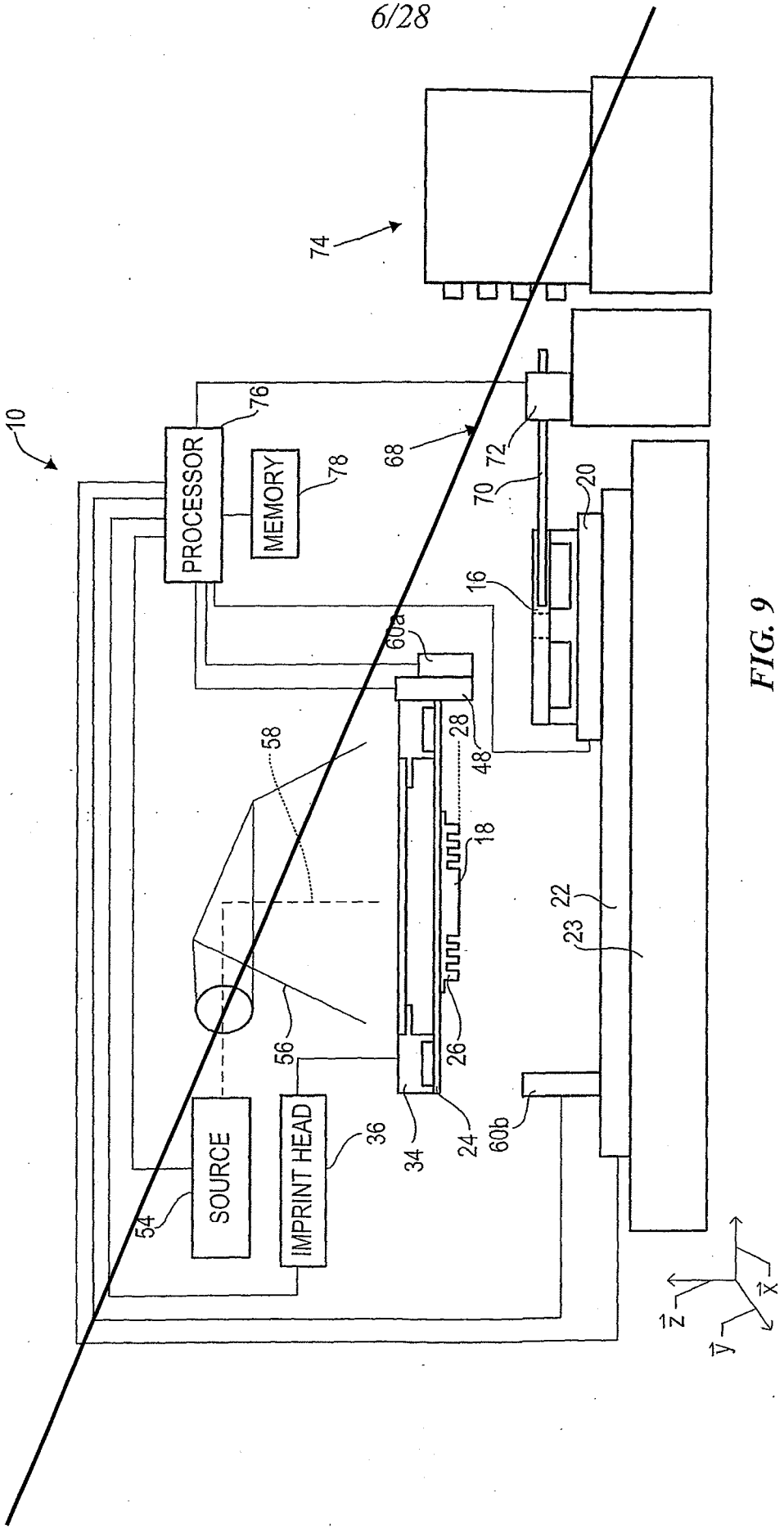
10
74
76
PROCESSOR
78
MEMORY
68
72
70
20
16
60a
28
48
58
18
22
23
56
26
34
24
60b
36
IMPRINT HEAD
54
SOURCE
z
x
y

FIG. 9

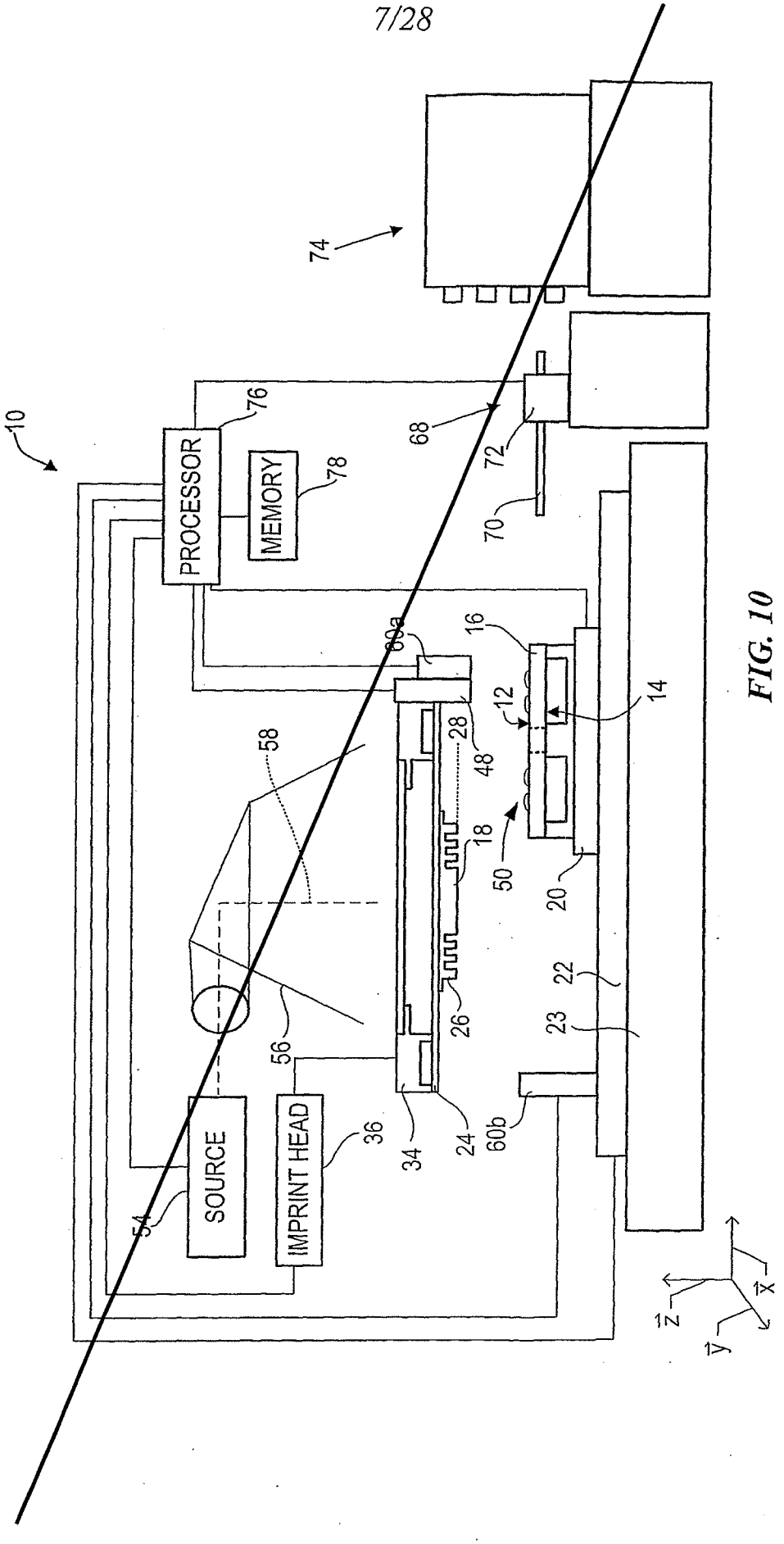
10
74
76
PROCESSOR
MEMORY
78
68
72
70
60a
16
12
14
28
48
58
18
50
20
22
23
26
56
SOURCE
IMPRINT HEAD
36
34
24
60b
54
z
x
y

FIG. 10

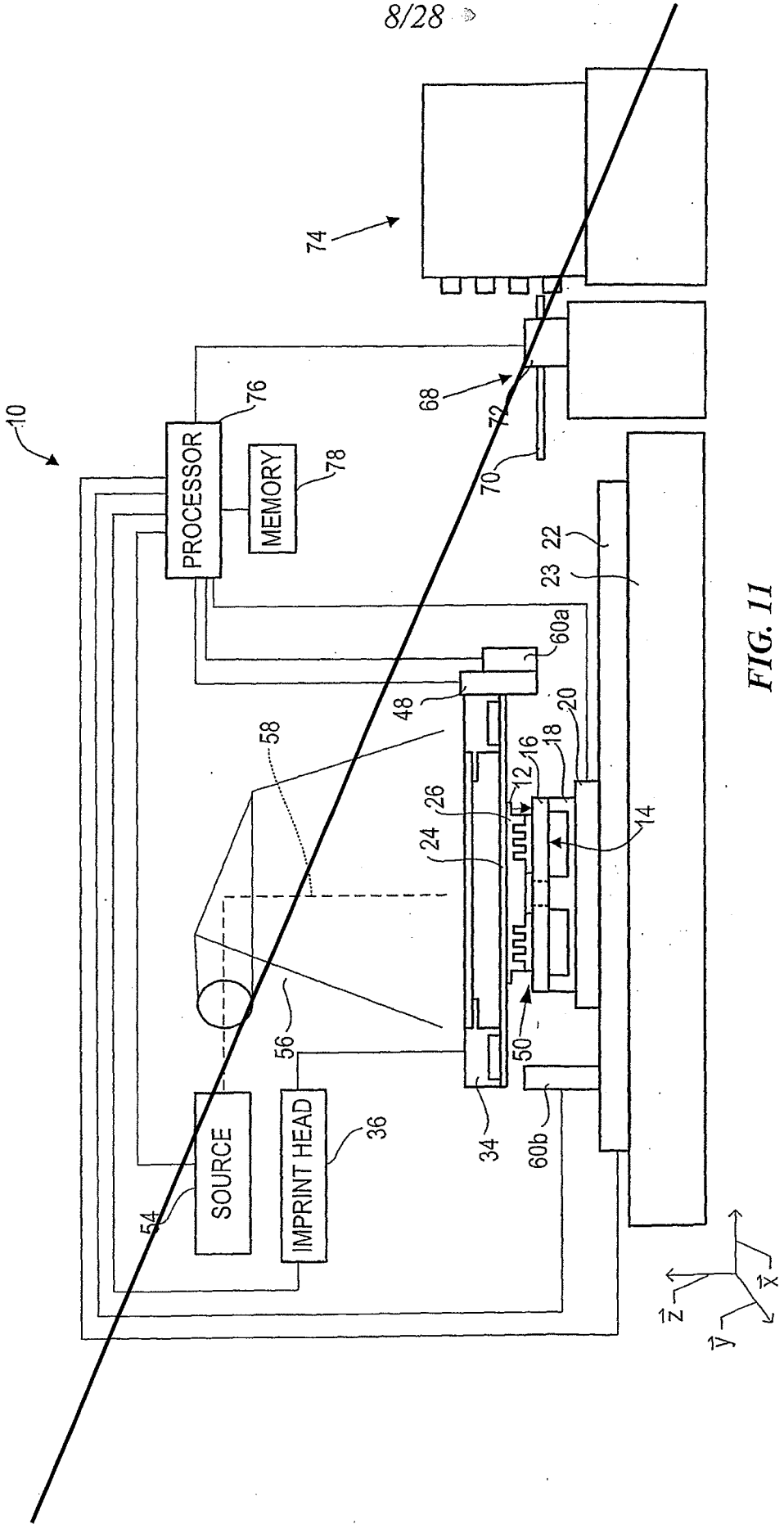
10
74
68
72
70
76
PROCESSOR
78
MEMORY
22
23
60a
48
20
18
16
12
58
26
24
14
50
56
54
SOURCE
IMPRINT HEAD
36
34
60b
z
x
y

FIG. 11

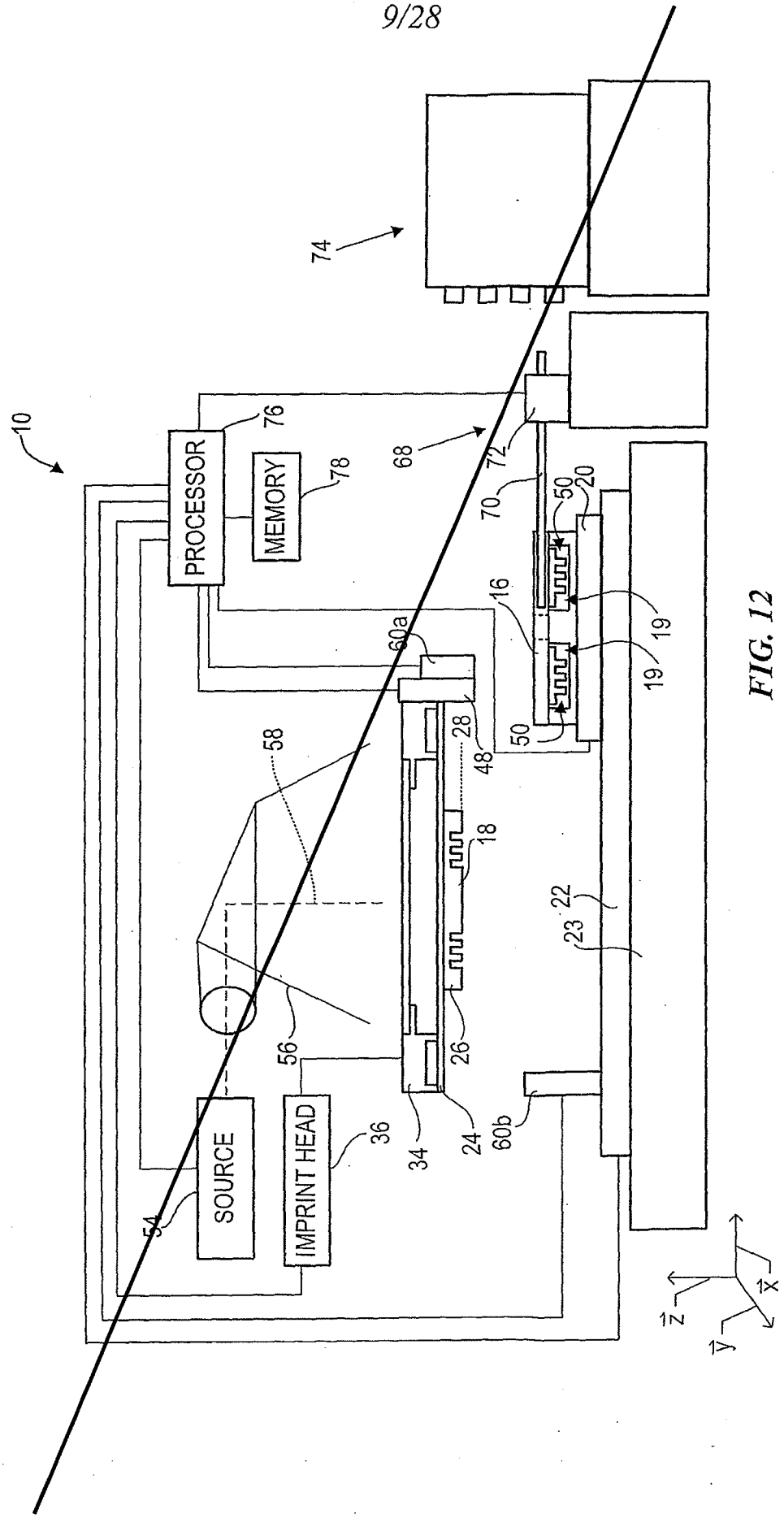
10
74
PROCESSOR
76
MEMORY
78
68
72
70
50
20
16
19
19
60a
28
48
50
58
18
22
23
56
26
34
24
60b
36
IMPRINT HEAD
SOURCE
54
z
x
y

FIG. 12

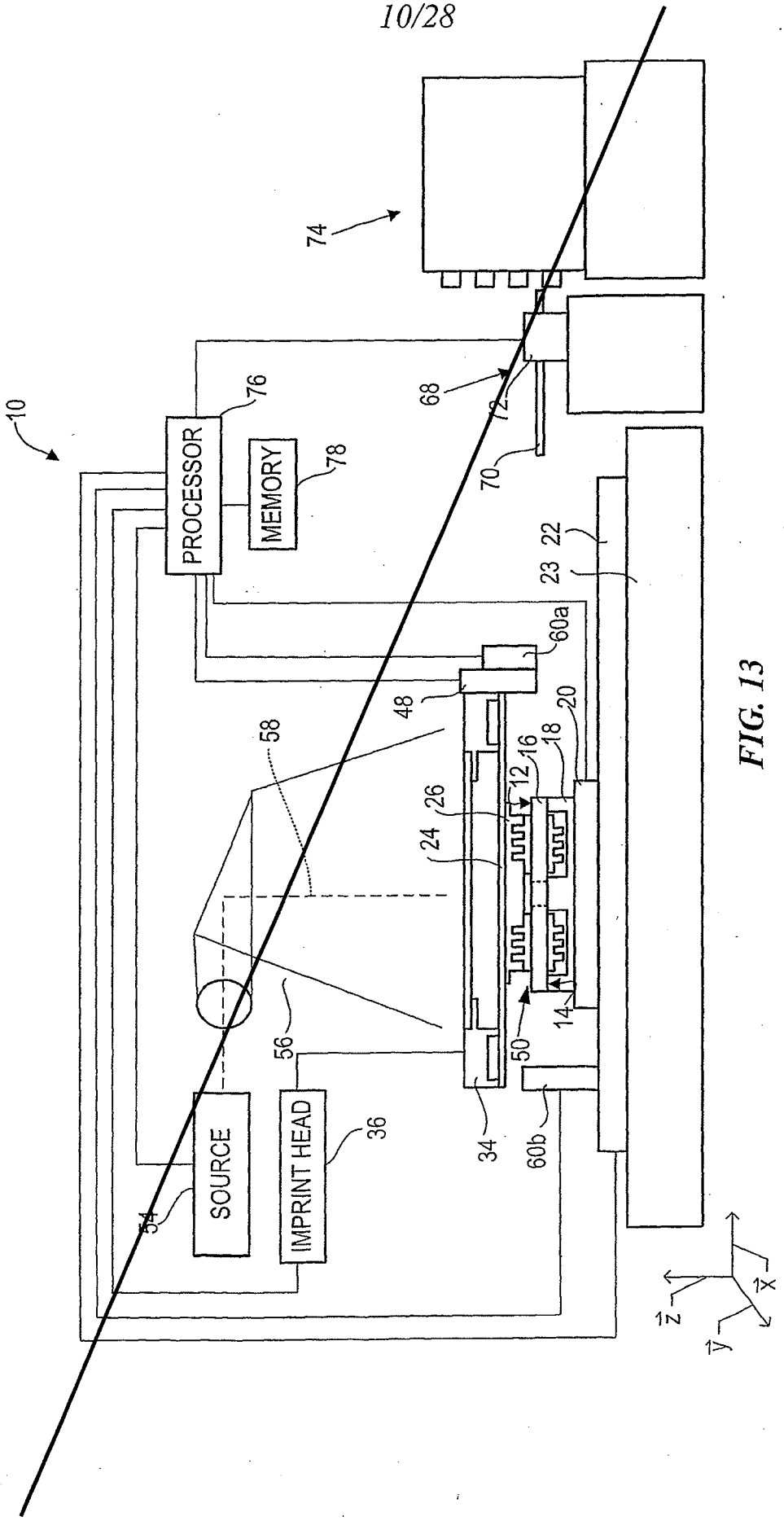
10
74
68
72
70
76
PROCESSOR
78
MEMORY
22
23
60a
48
58
20
18
16
12
26
24
14
50
56
34
60b
36
IMPRINT HEAD
54
SOURCE
$\vec{z}$
$\vec{x}$
$\vec{y}$

FIG. 13

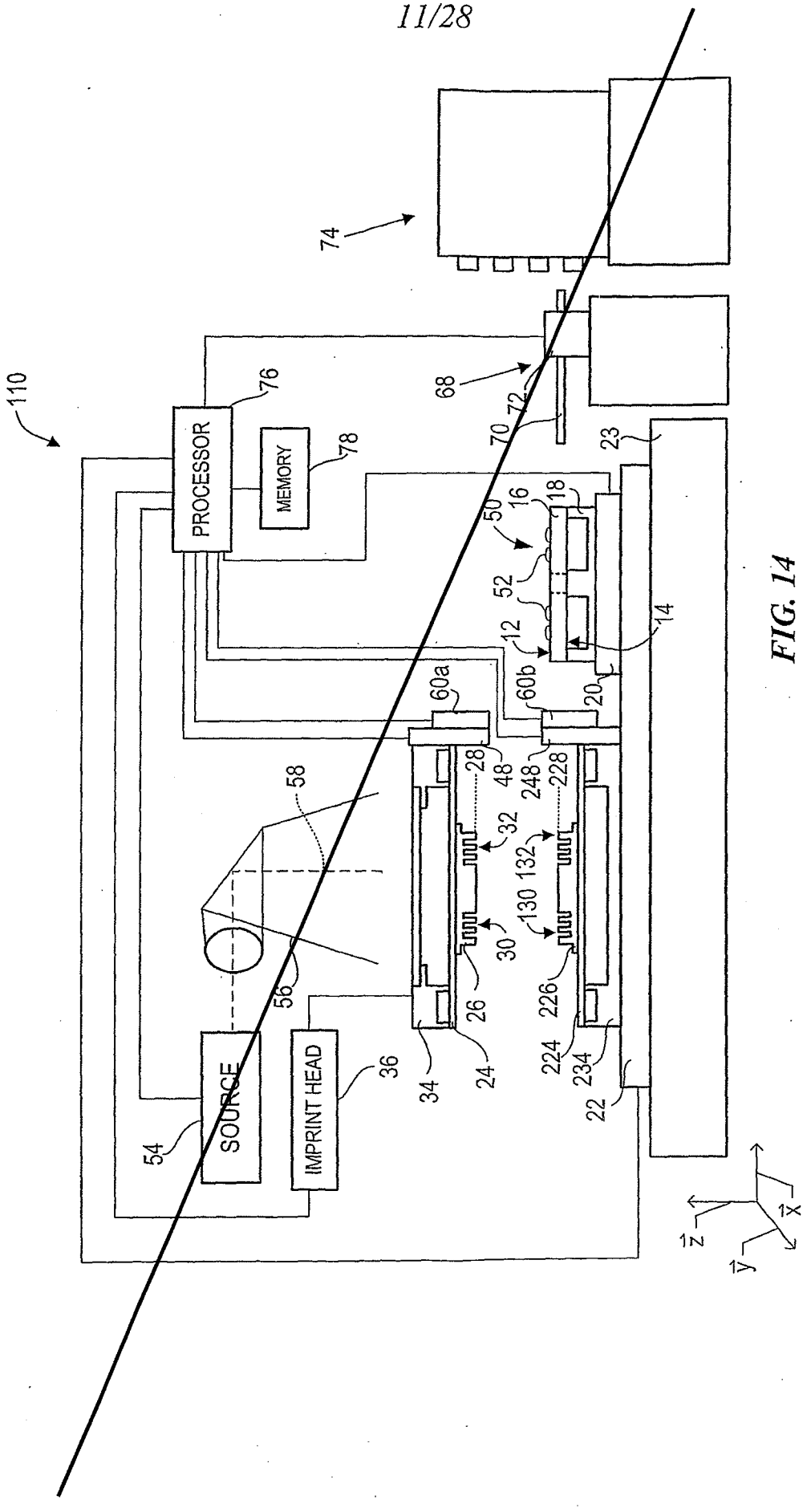
110
74
68
72
70
76
PROCESSOR
78
MEMORY
23
50
16
18
52
12
14
20
60a
60b
28
48
248
228
58
32
132
130
30
26
56
226
224
234
22
34
24
36
IMPRINT HEAD
54
SOURCE
z
x
y

FIG. 14

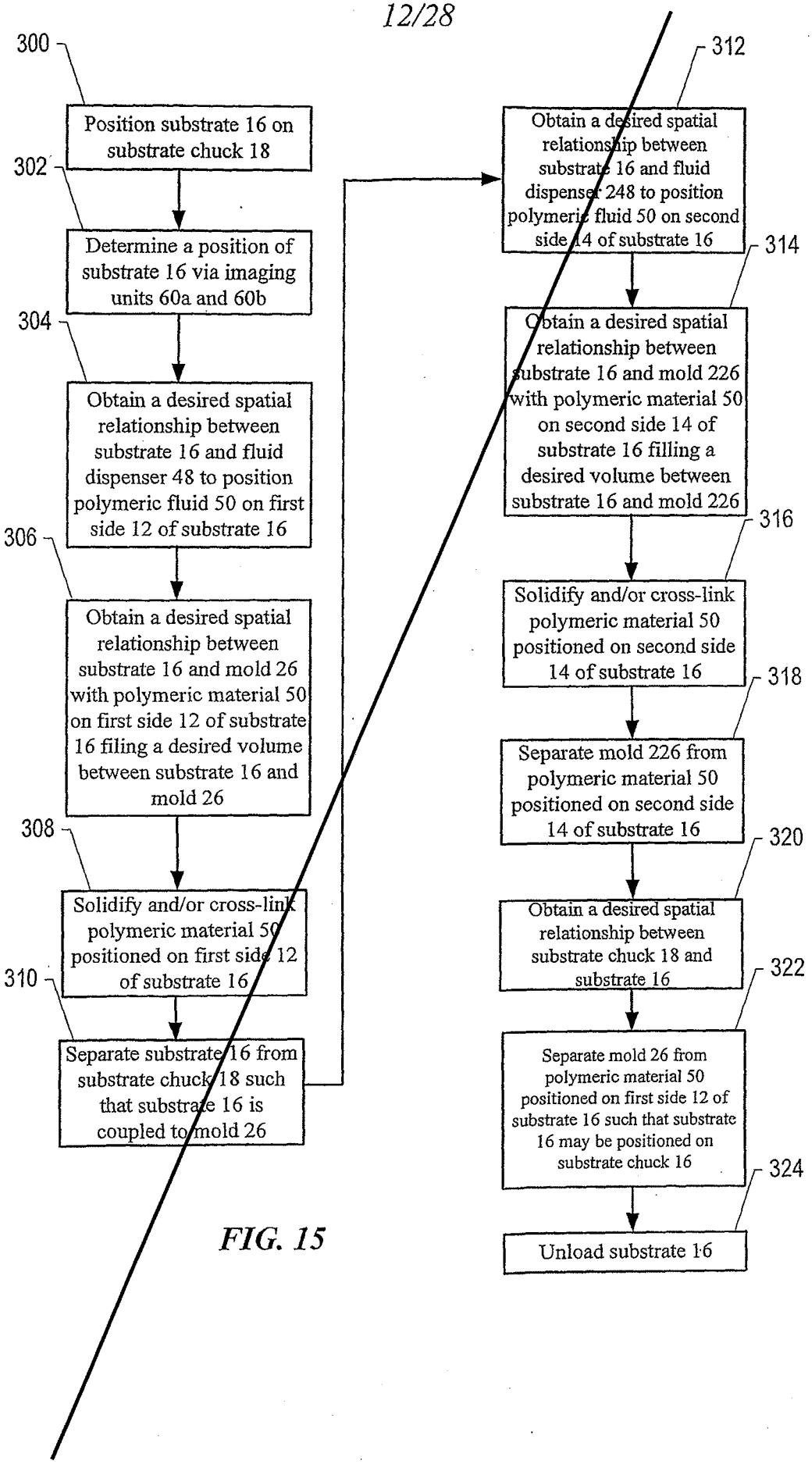
300
Position substrate 16 on substrate chuck 18
302
Determine a position of substrate 16 via imaging units 60a and 60b
304
Obtain a desired spatial relationship between substrate 16 and fluid dispenser 48 to position polymeric fluid 50 on first side 12 of substrate 16
306
Obtain a desired spatial relationship between substrate 16 and mold 26 with polymeric material 50 on first side 12 of substrate 16 filing a desired volume between substrate 16 and mold 26
308
Solidify and/or cross-link polymeric material 50 positioned on first side 12 of substrate 16
310
Separate substrate 16 from substrate chuck 18 such that substrate 16 is coupled to mold 26
312
Obtain a desired spatial relationship between substrate 16 and fluid dispenser 248 to position polymeric fluid 50 on second side 14 of substrate 16
314
Obtain a desired spatial relationship between substrate 16 and mold 226 with polymeric material 50 on second side 14 of substrate 16 filling a desired volume between substrate 16 and mold 226
316
Solidify and/or cross-link polymeric material 50 positioned on second side 14 of substrate 16
318
Separate mold 226 from polymeric material 50 positioned on second side 14 of substrate 16
320
Obtain a desired spatial relationship between substrate chuck 18 and substrate 16
322
Separate mold 26 from polymeric material 50 positioned on first side 12 of substrate 16 such that substrate 16 may be positioned on substrate chuck 16
324
Unload substrate 16

FIG. 15

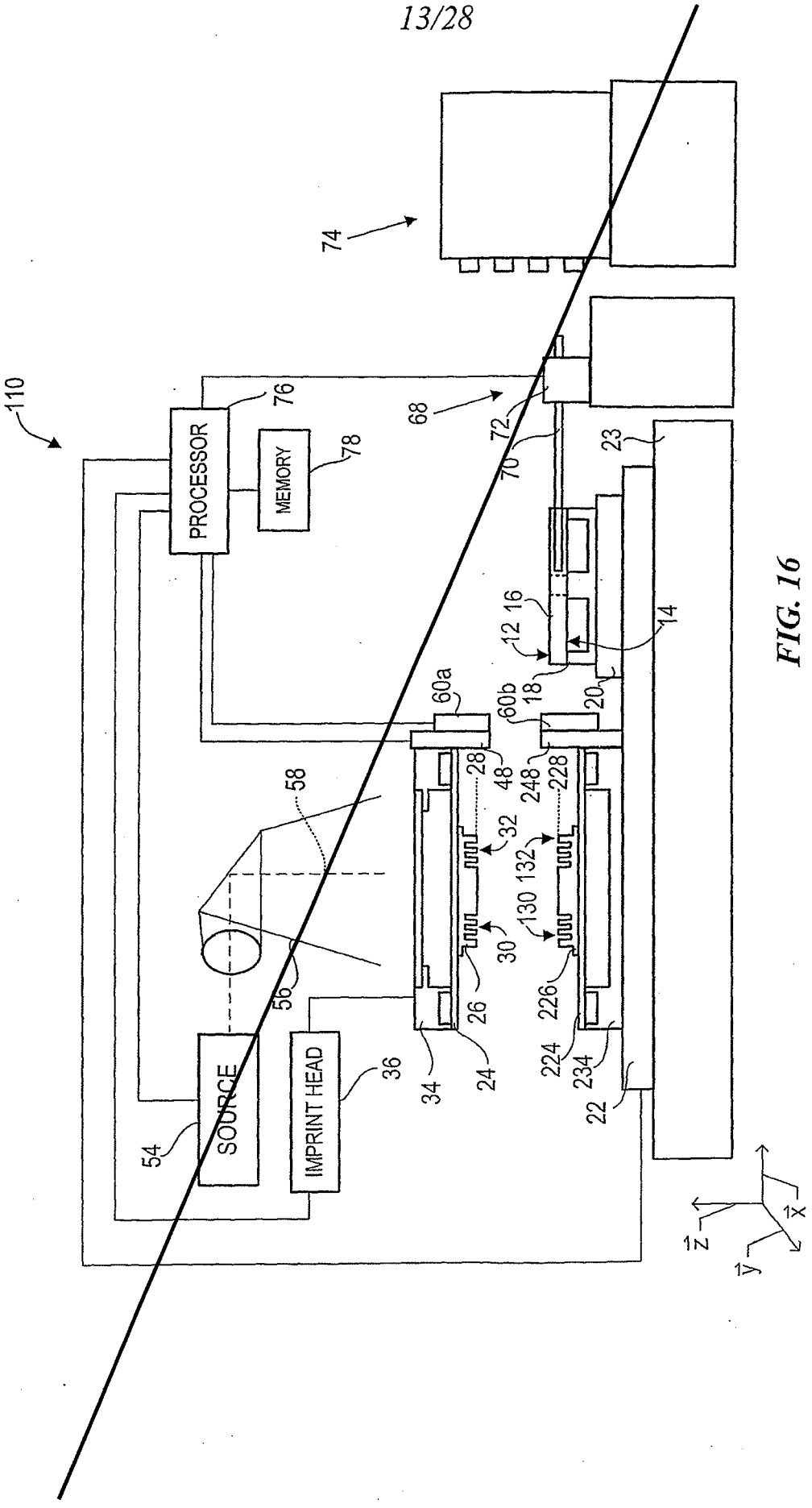
110
PROCESSOR
76
MEMORY
78
74
68
72
70
23
12
16
14
18
20
60a
60b
28
48
248
228
32
132
130
30
26
226
58
56
SOURCE
54
IMPRINT HEAD
36
34
24
224
234
22
z
y
x

FIG. 16

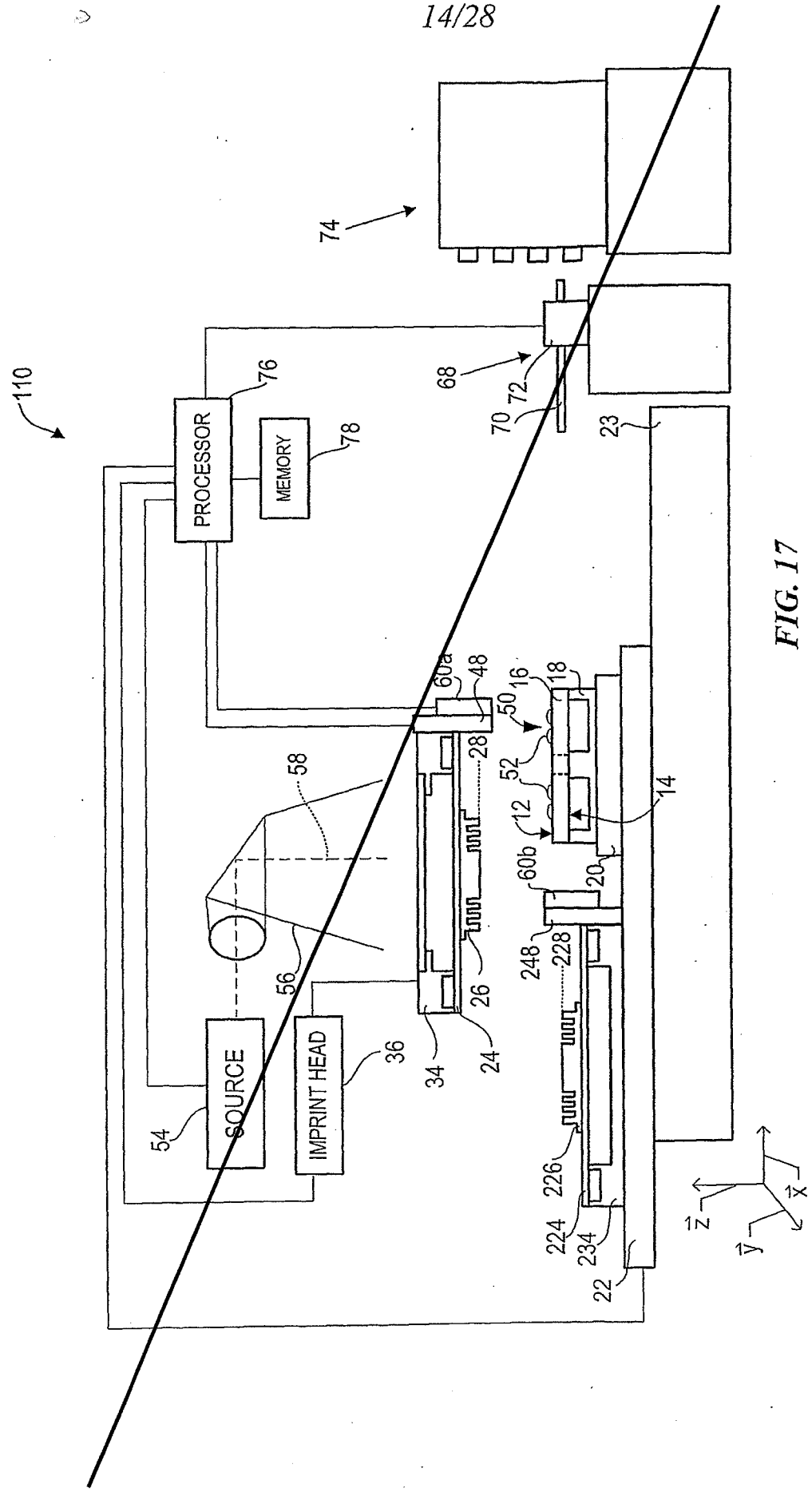
110
PROCESSOR
76
MEMORY
78
74
68
72
70
23
60a
48
50
16
18
52
12
14
28
58
60b
20
248
228
56
26
24
34
SOURCE
54
IMPRINT HEAD
36
226
224
234
22
z
y
x

FIG. 17

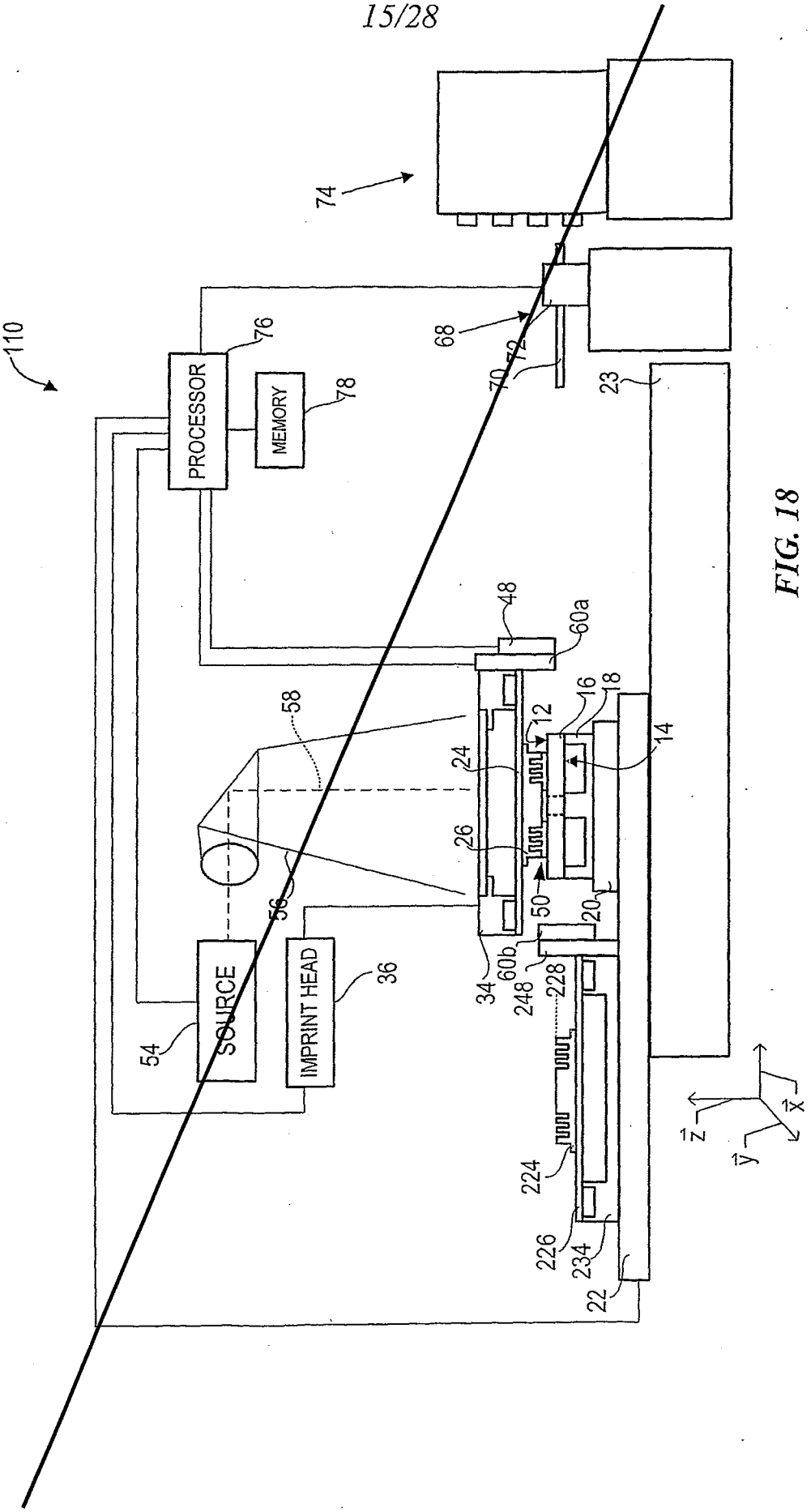
110
74
68
70
72
23
76
PROCESSOR
78
MEMORY
48
60a
58
12
16
18
14
24
26
50
20
56
54
SOURCE
IMPRINT HEAD
36
34
60b
248
228
224
226
234
22
z
x
y

FIG. 18

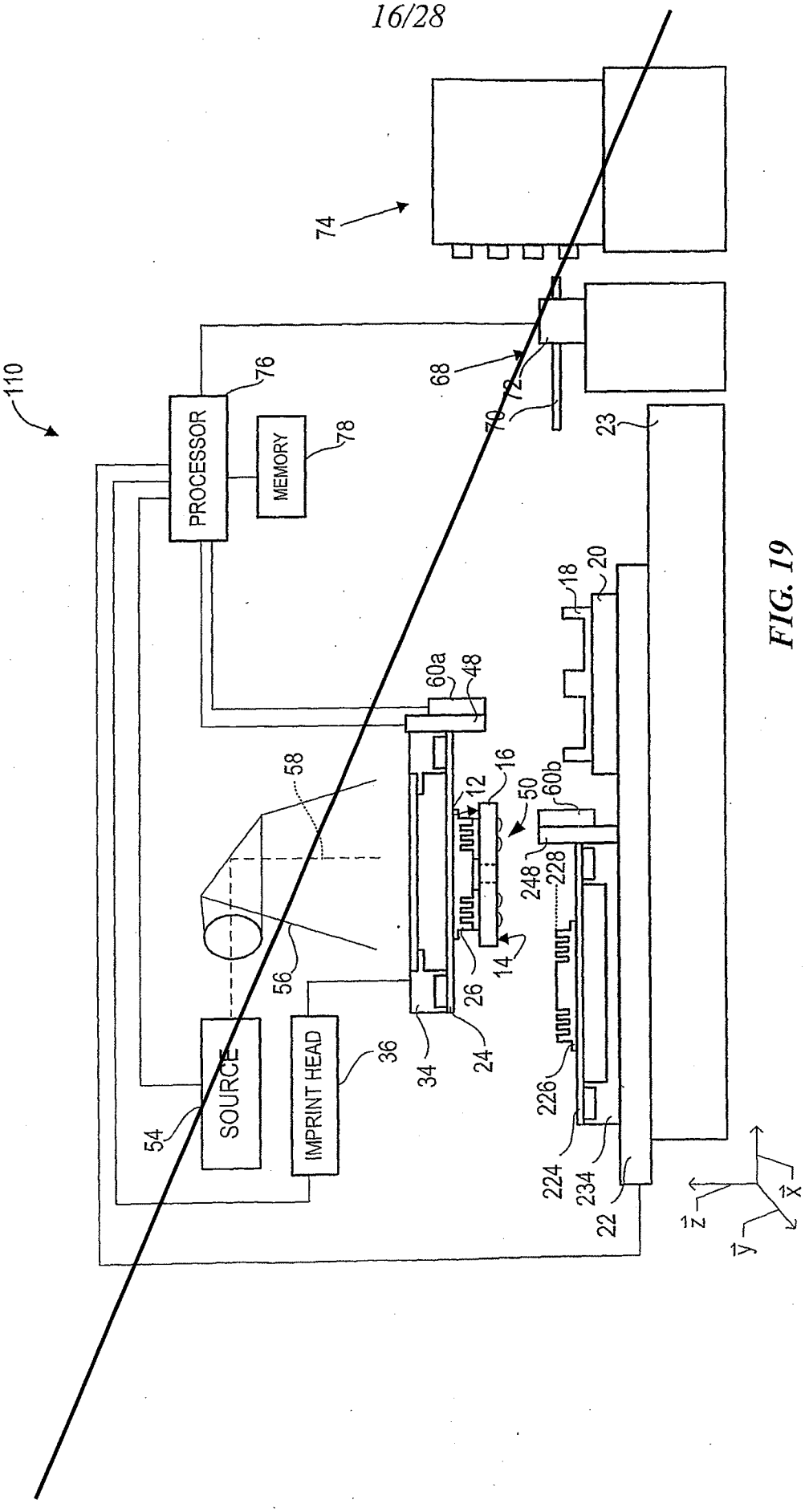
110
74
76
PROCESSOR
78
MEMORY
68
72
70
23
18
20
60a
48
16
12
50
60b
248
228
58
56
14
26
34
24
36
IMPRINT HEAD
54
SOURCE
226
224
234
22
z
x
y

FIG. 19

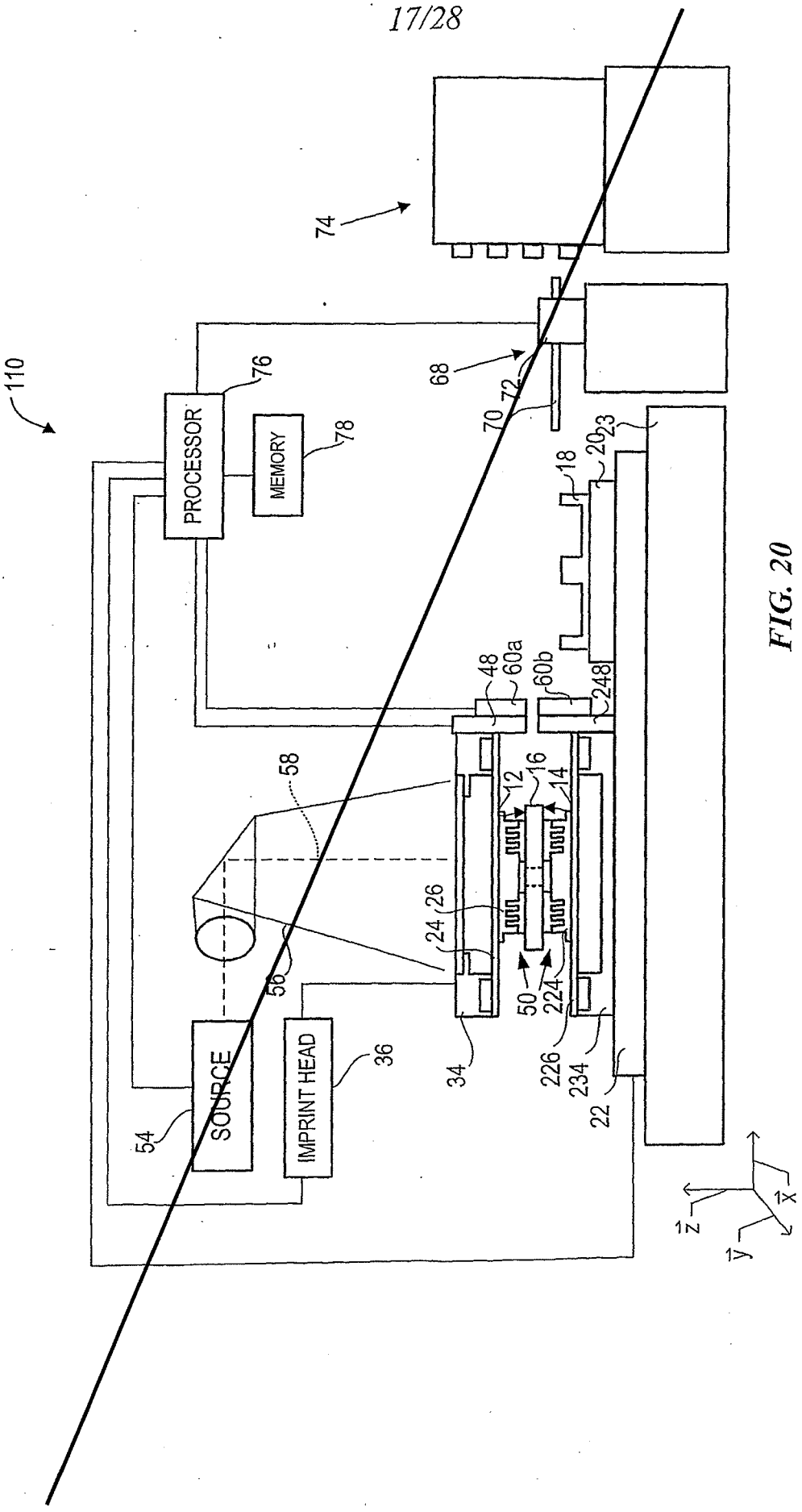
110
74
68
72
70
76
PROCESSOR
78
MEMORY
18
20
23
48
60a
60b
248
58
16
12
14
26
24
56
50
224
34
226
234
22
36
IMPRINT HEAD
54
SOURCE
z
x
y

FIG. 20

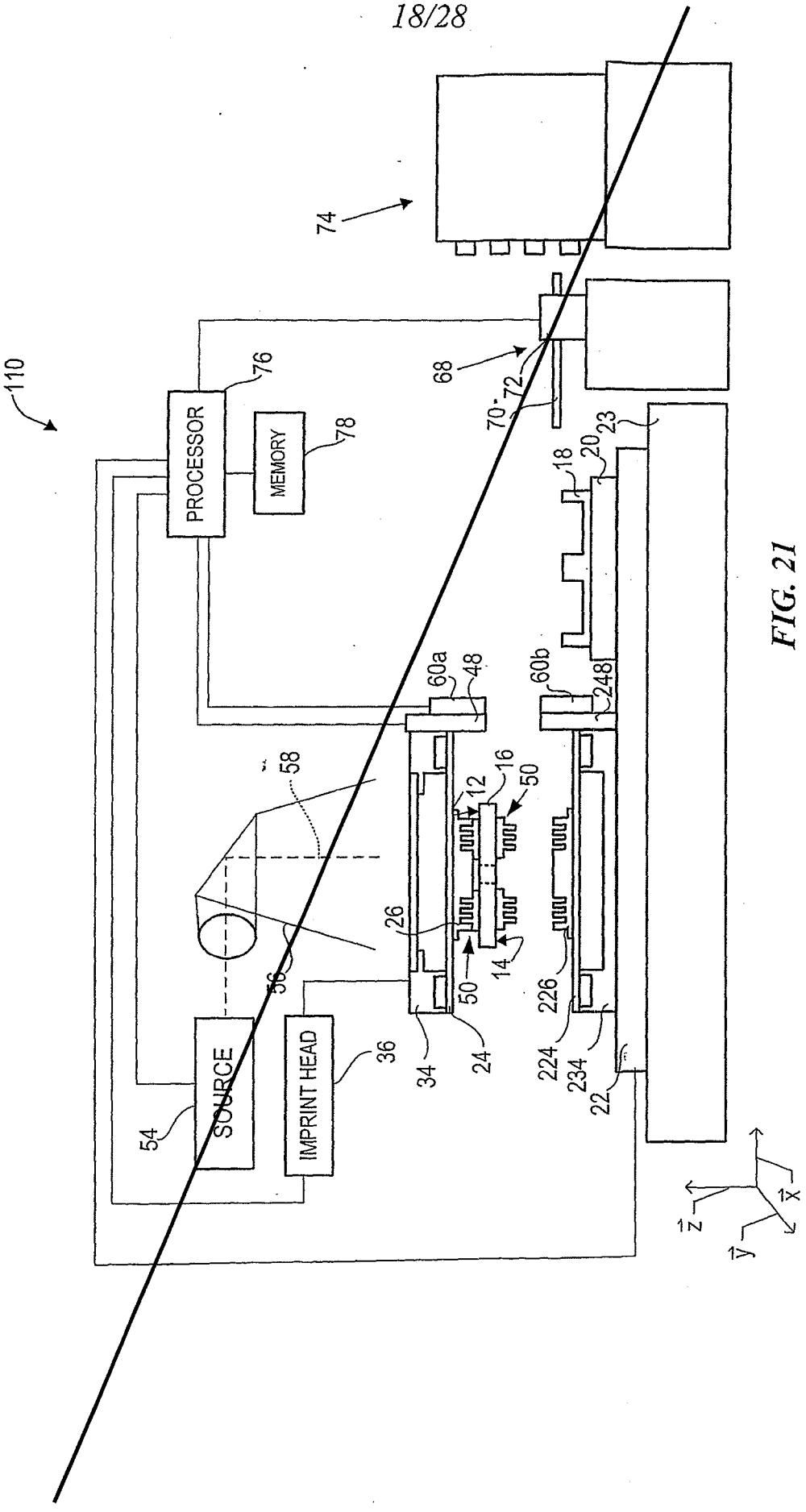
110
PROCESSOR
76
MEMORY
78
74
68
70
72
23
20
18
60a
48
60b
248
58
16
12
50
26
14
50
56
SOURCE
54
IMPRINT HEAD
36
34
24
226
224
234
22
z
y
x

FIG. 21

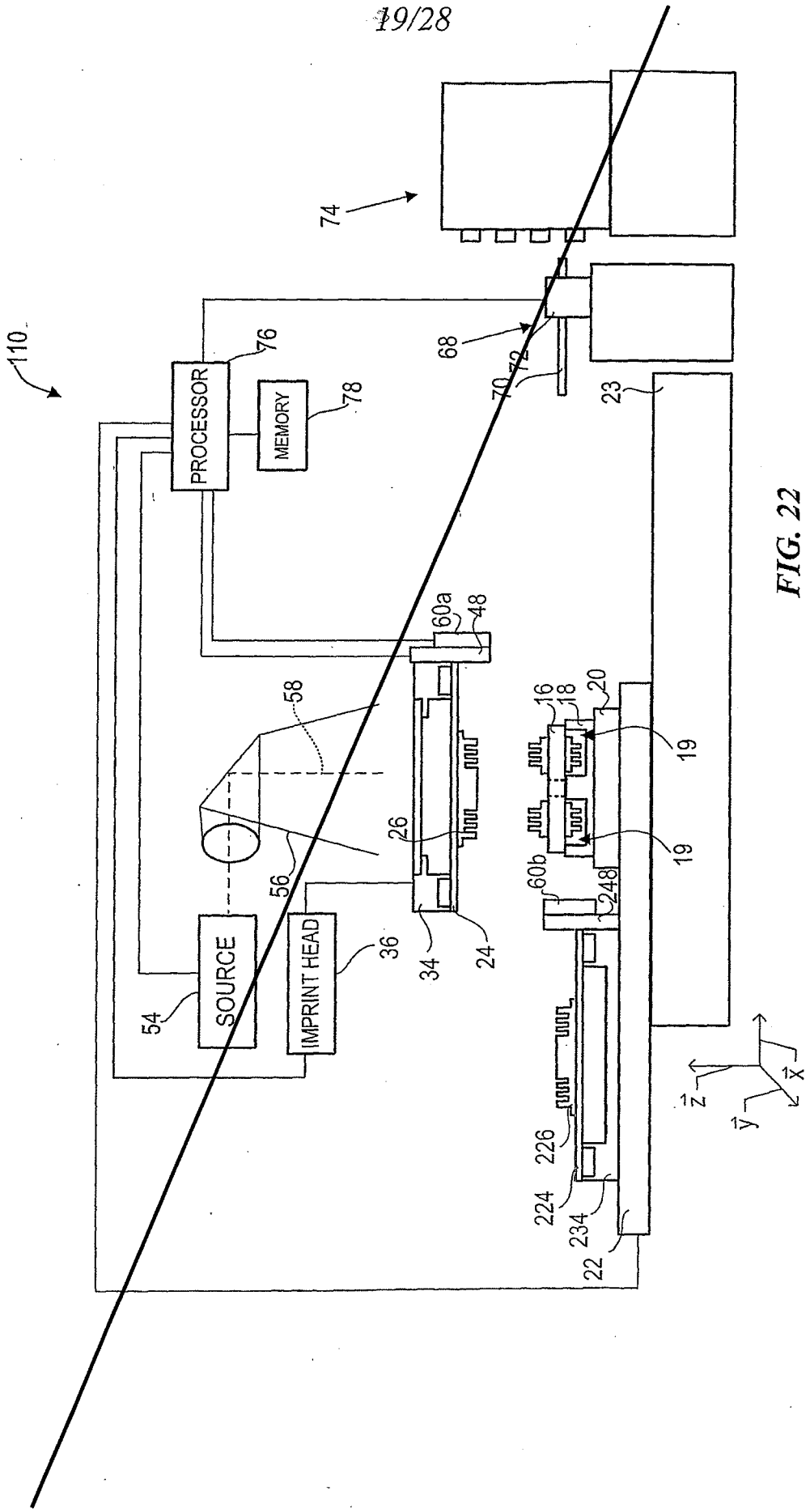
110
74
68
72
70
23
PROCESSOR
76
MEMORY
78
60a
48
58
26
56
60b
248
16
18
20
19
19
SOURCE
54
IMPRINT HEAD
36
34
24
226
224
234
22
z
x
y

FIG. 22

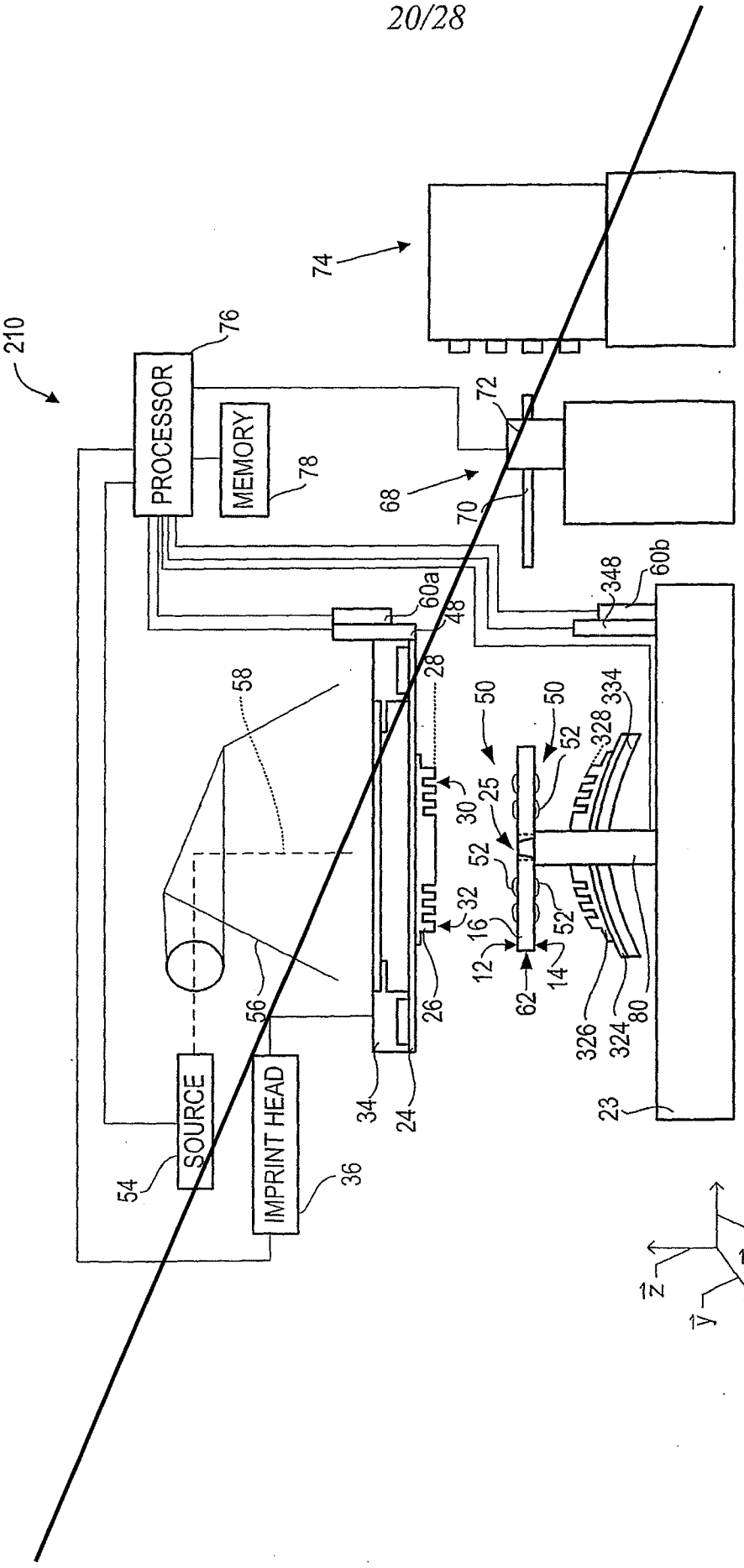
210
PROCESSOR
MEMORY
SOURCE
IMPRINT HEAD
74
76
78
72
68
70
348
60b
60a
48
28
58
50
52
334
328
30
25
32
16
12
14
62
26
56
54
36
34
24
23
326
324
80
z
x
y

FIG. 23

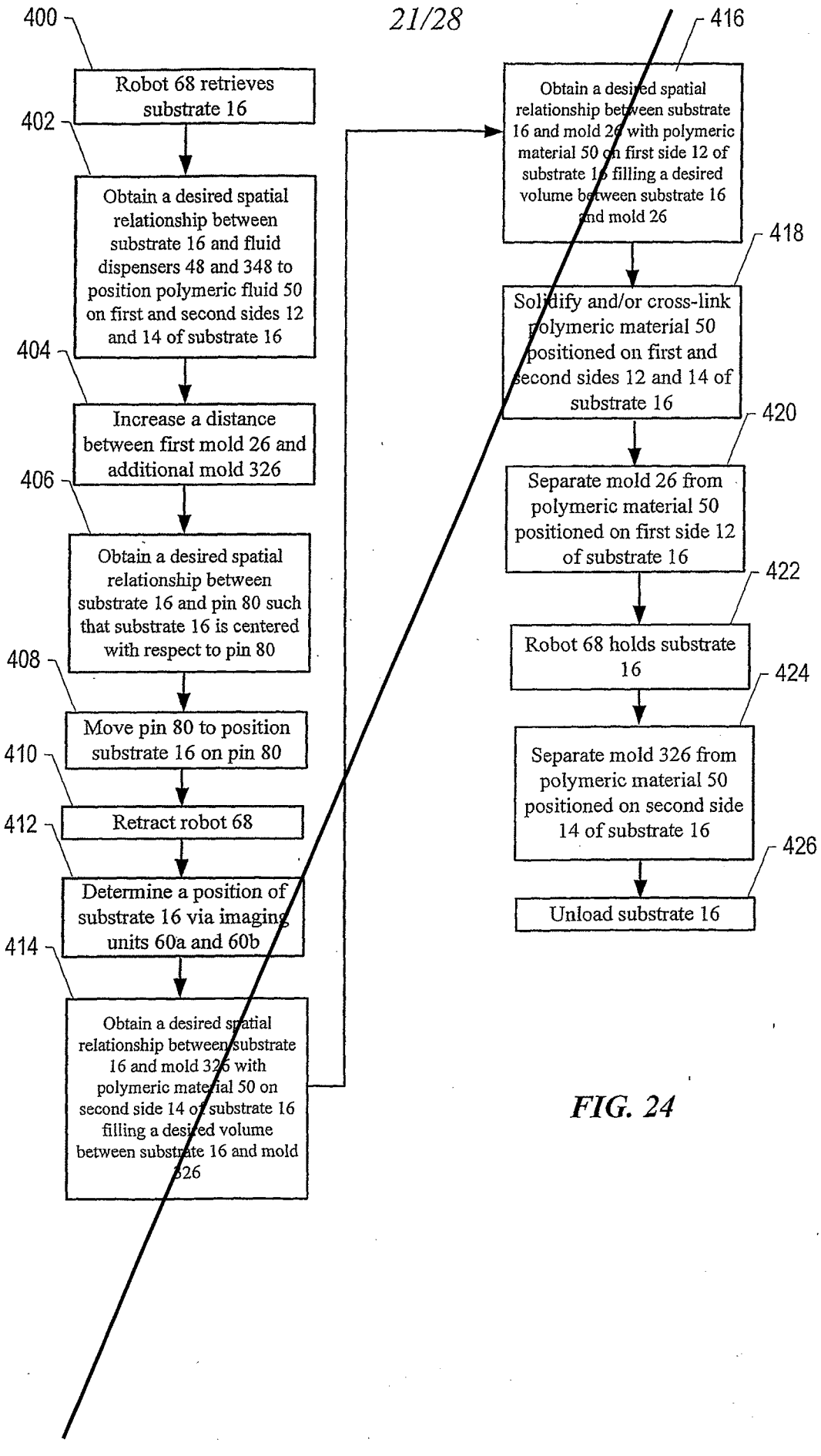
400
Robot 68 retrieves substrate 16
402
Obtain a desired spatial relationship between substrate 16 and fluid dispensers 48 and 348 to position polymeric fluid 50 on first and second sides 12 and 14 of substrate 16
404
Increase a distance between first mold 26 and additional mold 326
406
Obtain a desired spatial relationship between substrate 16 and pin 80 such that substrate 16 is centered with respect to pin 80
408
Move pin 80 to position substrate 16 on pin 80
410
Retract robot 68
412
Determine a position of substrate 16 via imaging units 60a and 60b
414
Obtain a desired spatial relationship between substrate 16 and mold 326 with polymeric material 50 on second side 14 of substrate 16 filling a desired volume between substrate 16 and mold 326
416
Obtain a desired spatial relationship between substrate 16 and mold 26 with polymeric material 50 on first side 12 of substrate 16 filling a desired volume between substrate 16 and mold 26
418
Solidify and/or cross-link polymeric material 50 positioned on first and second sides 12 and 14 of substrate 16
420
Separate mold 26 from polymeric material 50 positioned on first side 12 of substrate 16
422
Robot 68 holds substrate 16
424
Separate mold 326 from polymeric material 50 positioned on second side 14 of substrate 16
426
Unload substrate 16

FIG. 24

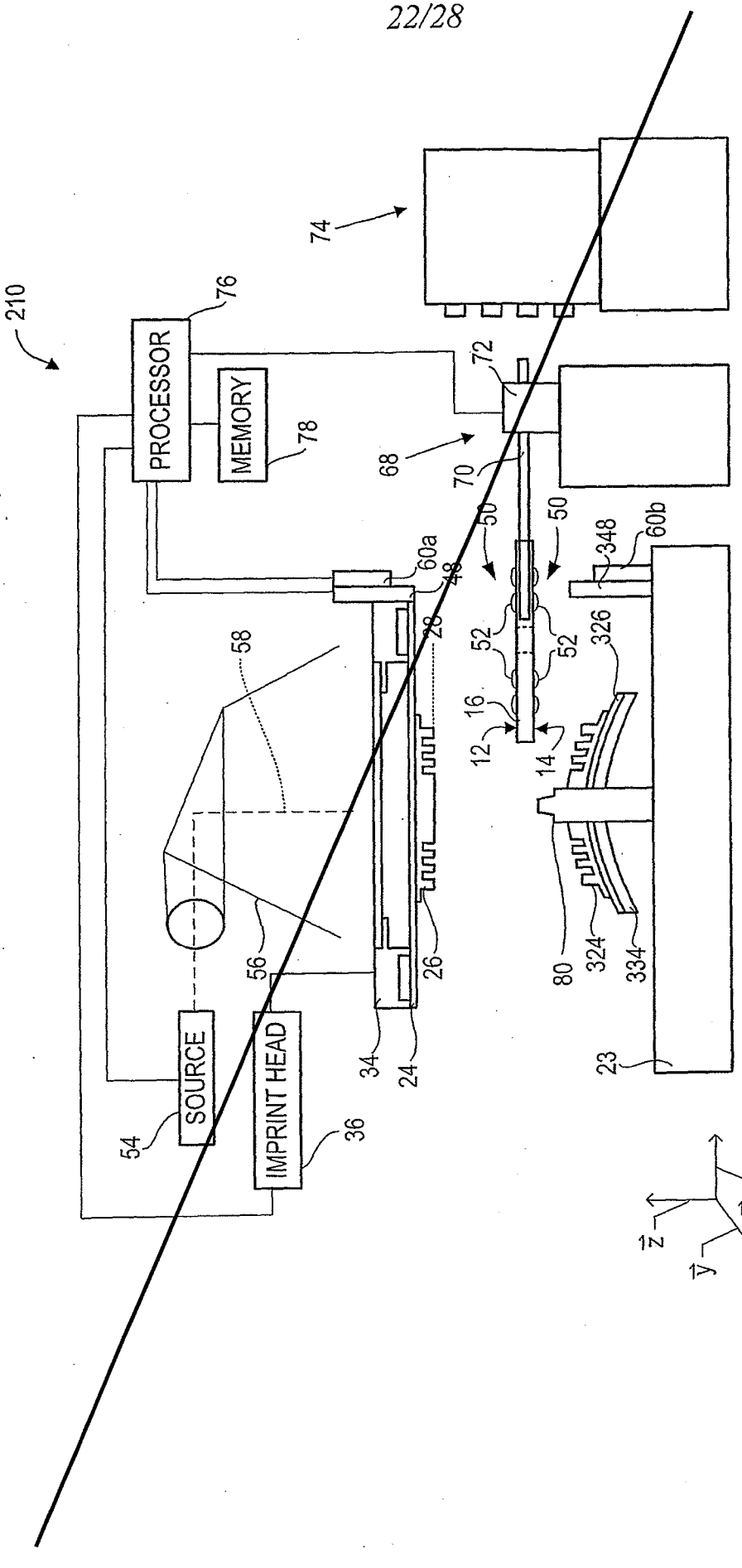
210
PROCESSOR
76
MEMORY
78
74
72
68
70
50
50
60a
48
28
58
52
52
16
12
14
348
60b
326
80
324
334
56
26
34
24
23
SOURCE
54
IMPRINT HEAD
36
z
y
x

FIG. 25

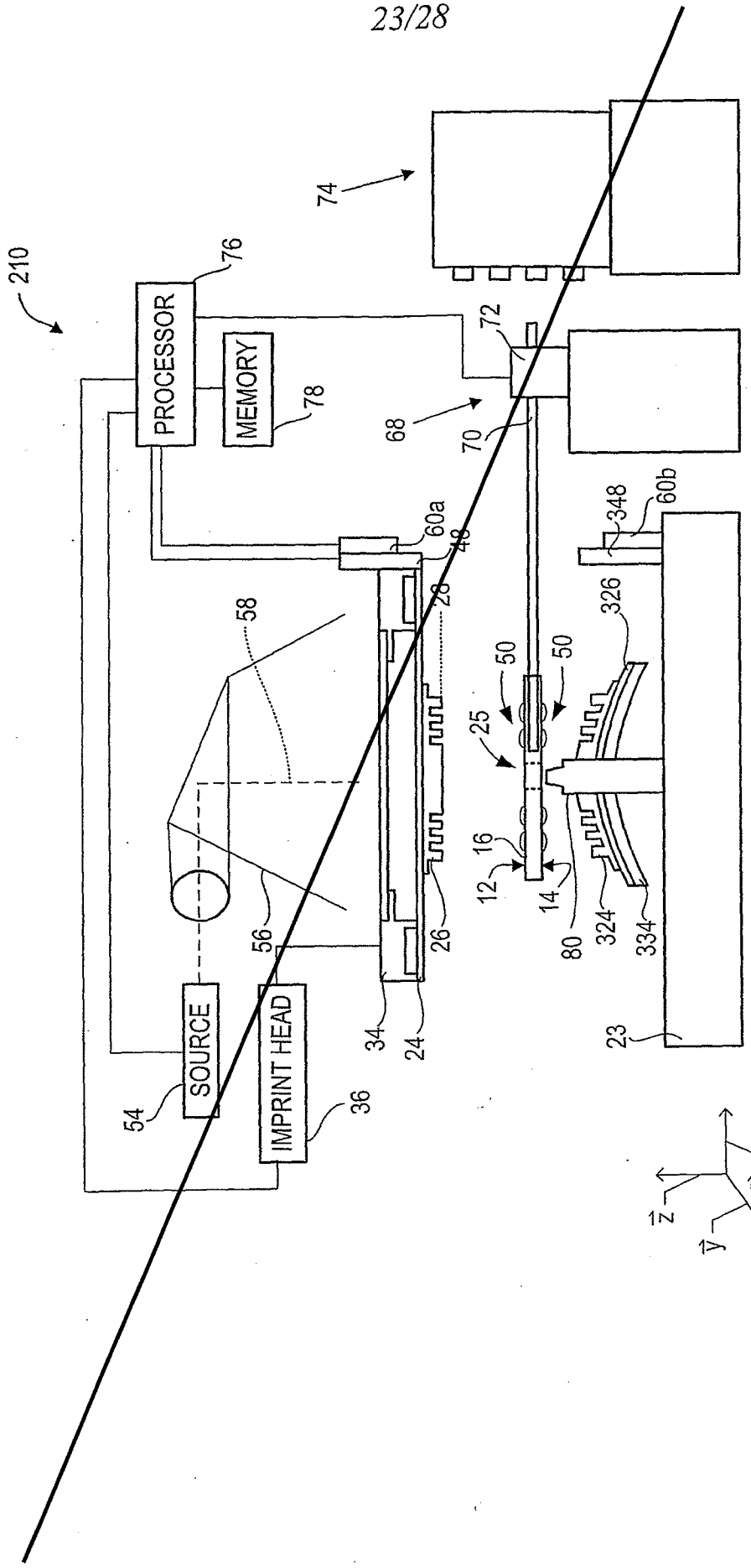
210
PROCESSOR
76
MEMORY
78
74
72
68
70
60a
48
28
58
50
50
25
16
12
14
80
324
334
326
348
60b
56
26
34
24
23
SOURCE
54
IMPRINT HEAD
36
z
y
x

FIG. 26

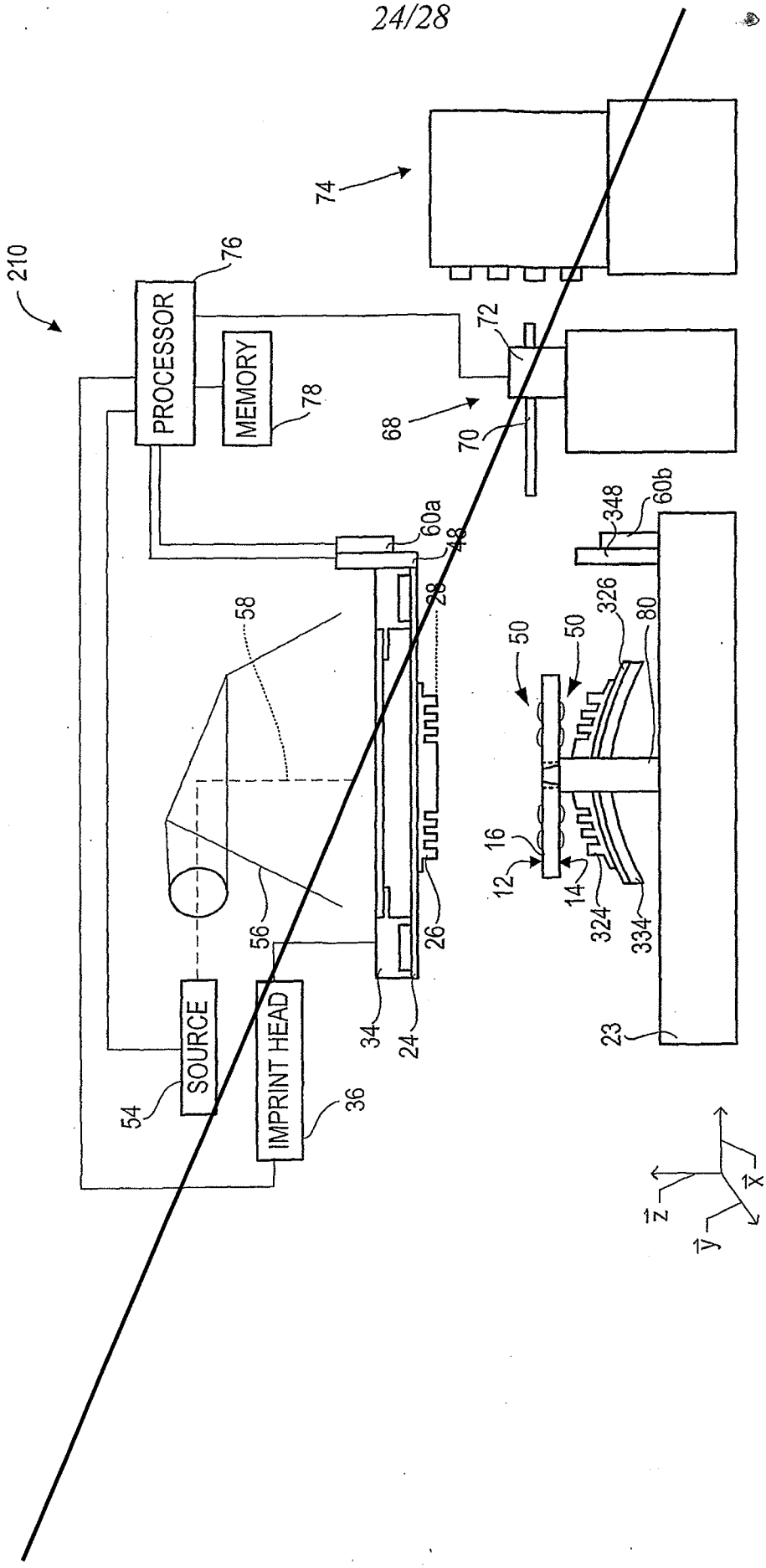
210
74
76
PROCESSOR
MEMORY
78
72
68
70
60a
48
28
58
50
50
326
80
348
60b
16
12
14
324
334
56
26
34
24
23
SOURCE
IMPRINT HEAD
54
36
$\vec{z}$
$\vec{x}$
$\vec{y}$

FIG. 27

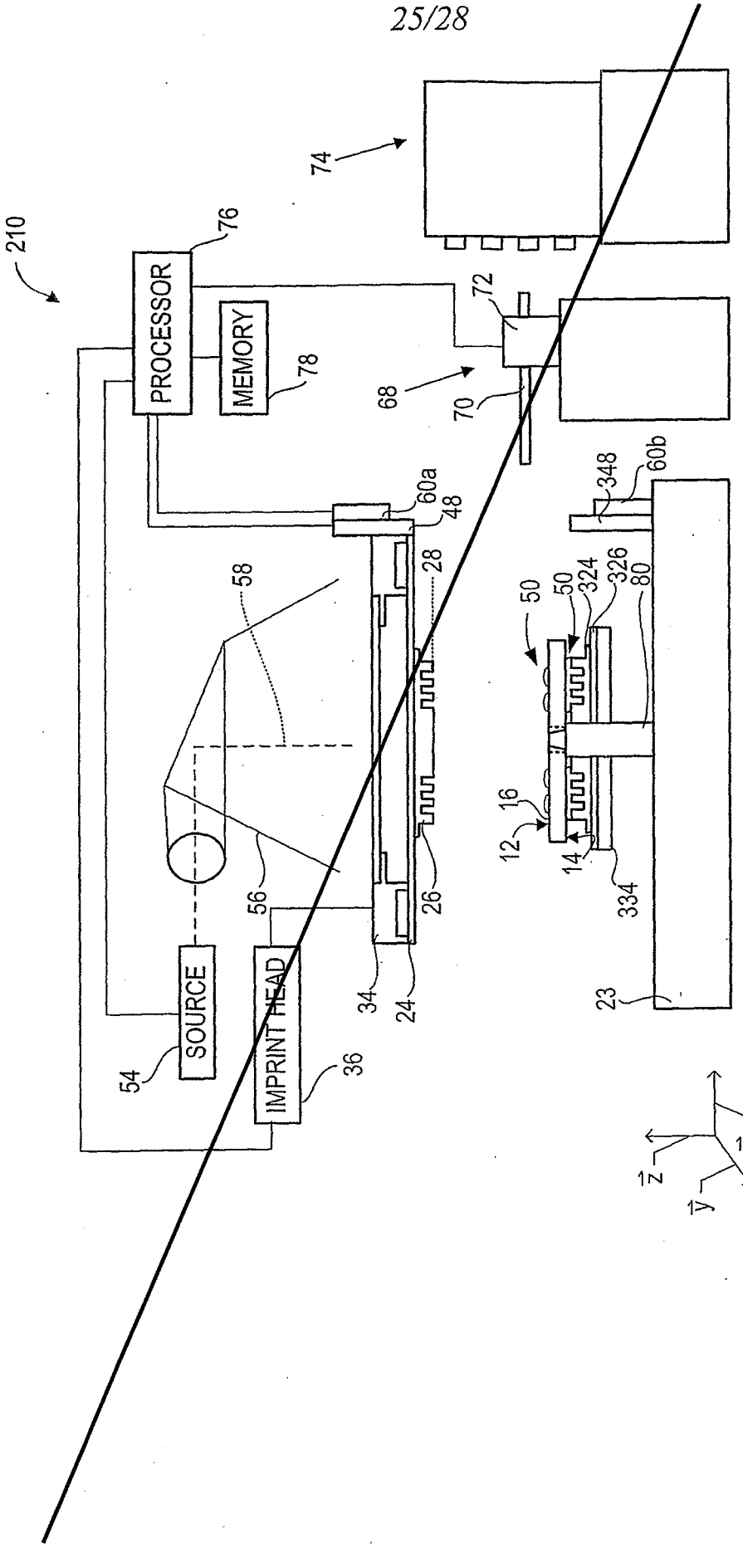
210
74
76
PROCESSOR
MEMORY
78
72
68
70
60a
48
28
58
50
324
326
80
348
60b
16
12
14
334
56
26
34
24
23
SOURCE
54
IMPRINT HEAD
36
x
z
y

FIG. 28

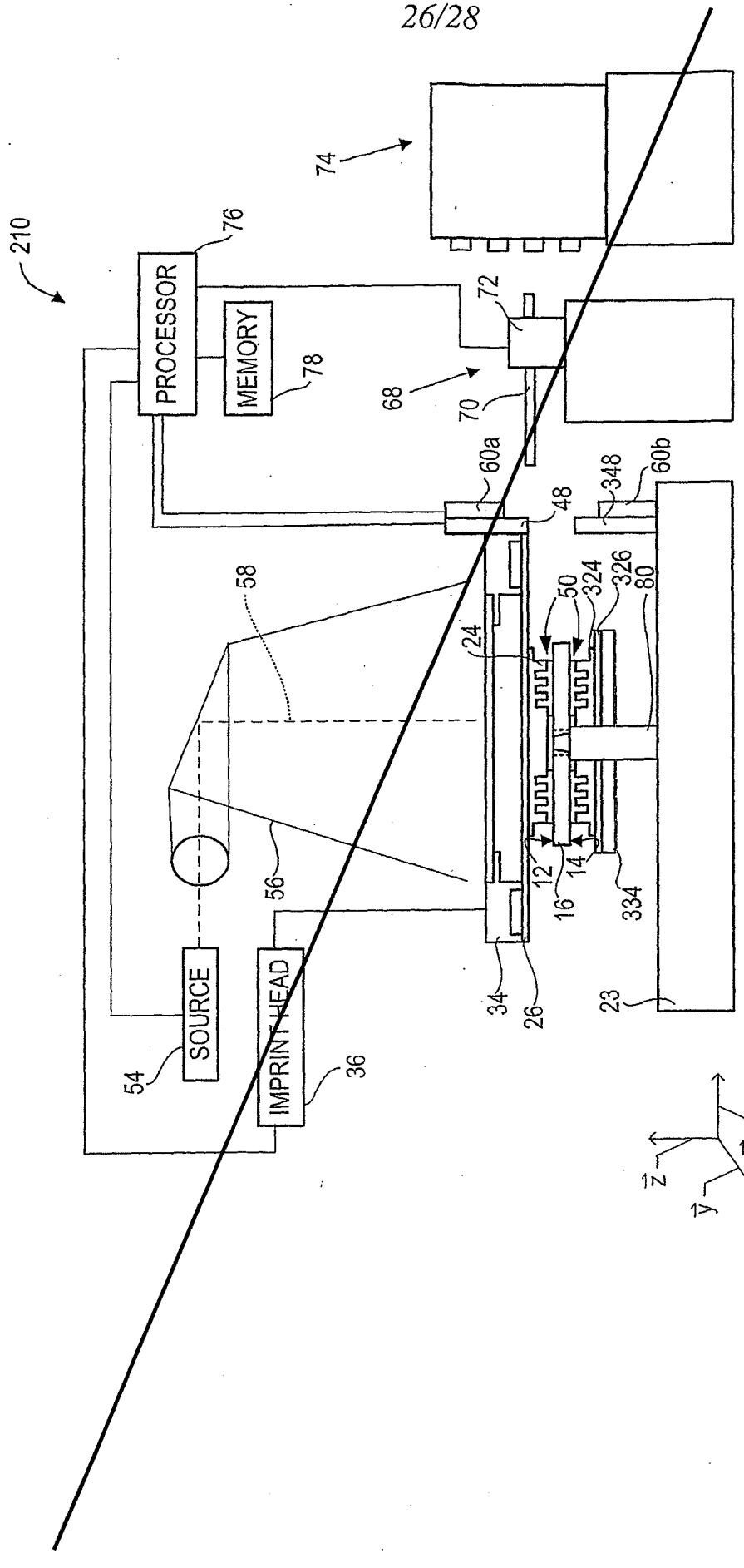
210
74
76
PROCESSOR
MEMORY
78
72
68
70
60a
348
60b
48
58
50
324
326
80
24
56
12
14
16
334
34
26
23
SOURCE
54
IMPRINT HEAD
36
z
x
y

FIG. 29

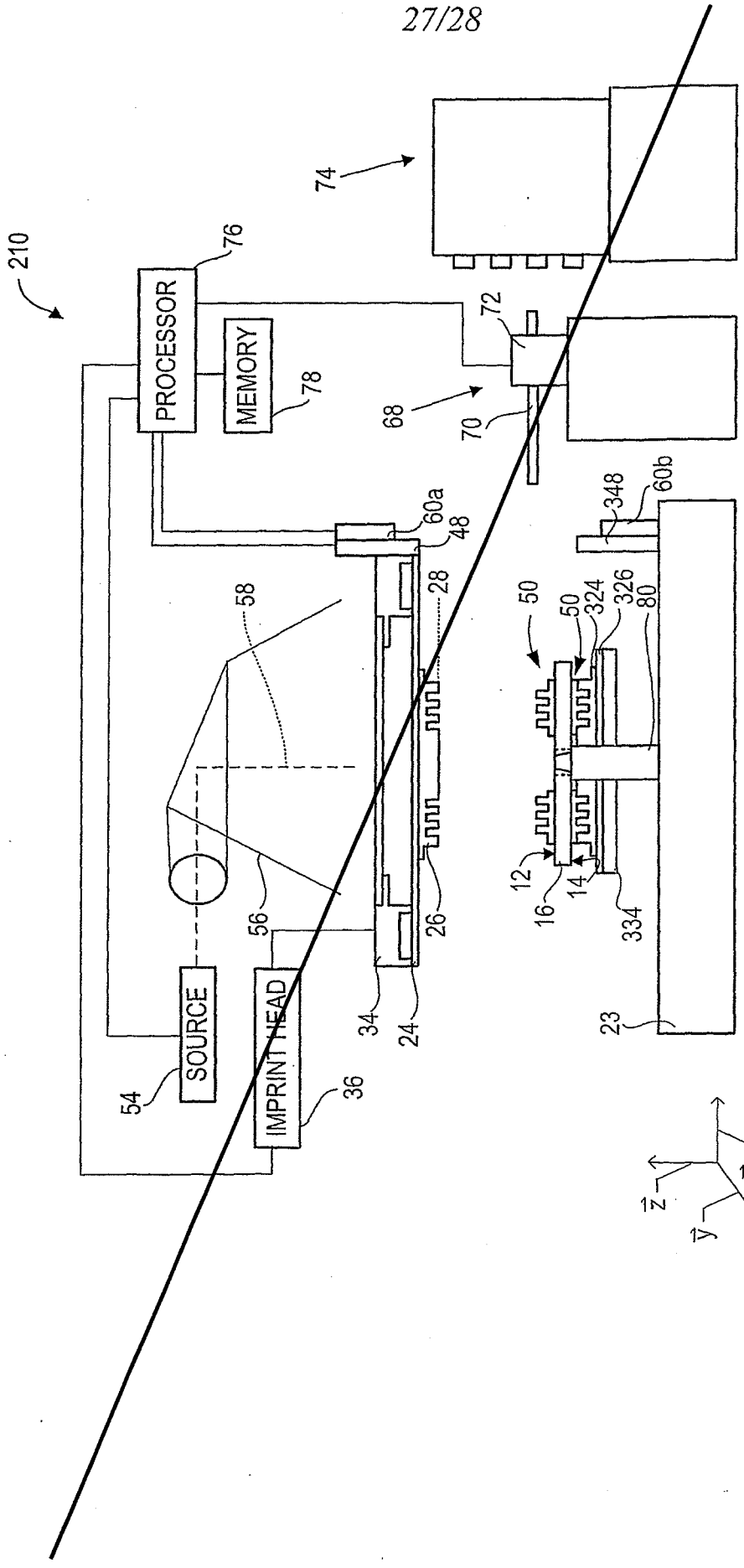
210
PROCESSOR
76
MEMORY
78
74
72
68
70
60a
48
28
58
56
26
34
24
SOURCE
54
IMPRINT HEAD
36
348
60b
50
324
326
80
12
16
14
334
23
z
x
y

FIG. 30

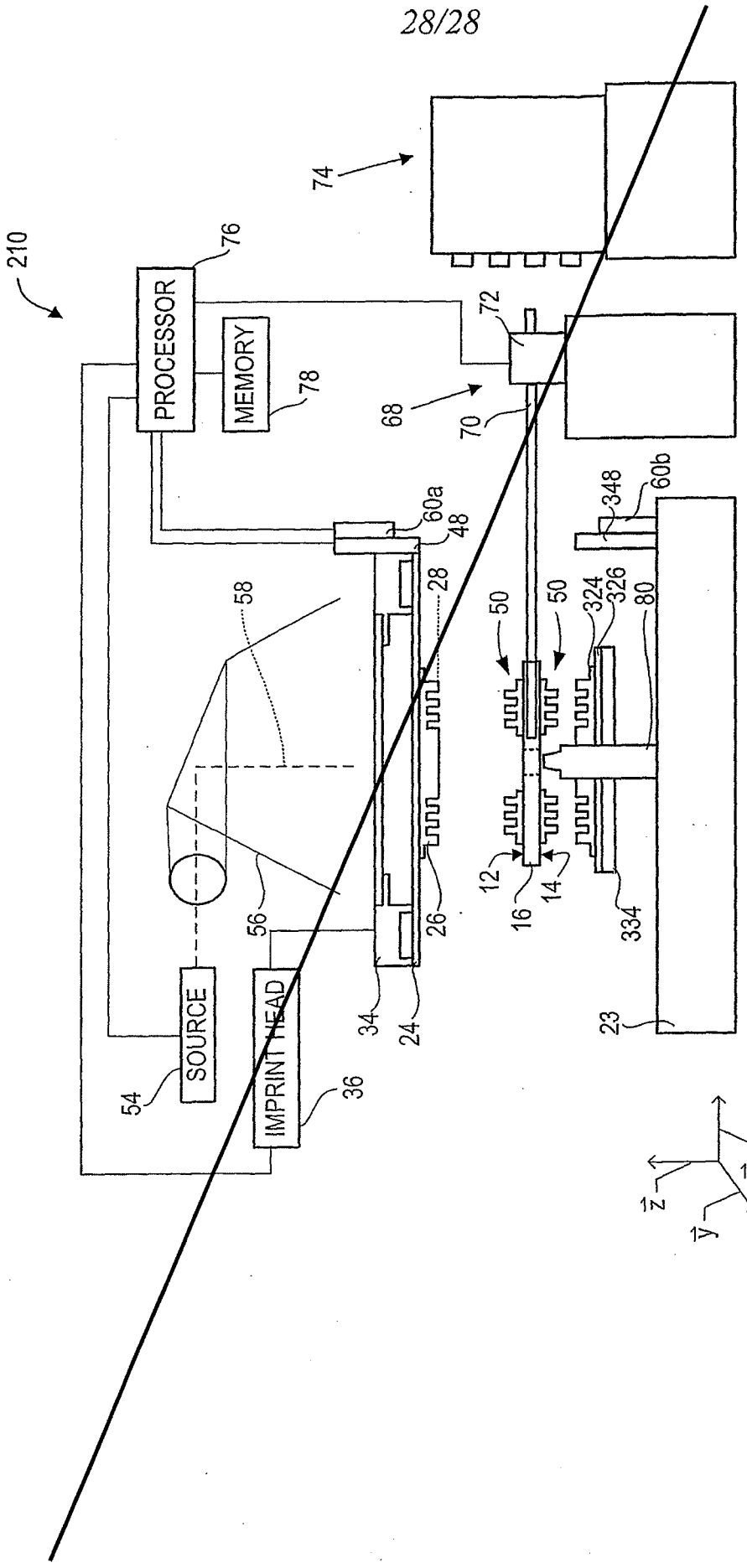
210
PROCESSOR
76
MEMORY
78
74
72
68
70
60a
48
28
58
56
26
34
24
SOURCE
54
IMPRINT HEAD
36
50
50
12
16
14
324
326
80
348
60b
334
23
z
y
x

FIG. 31

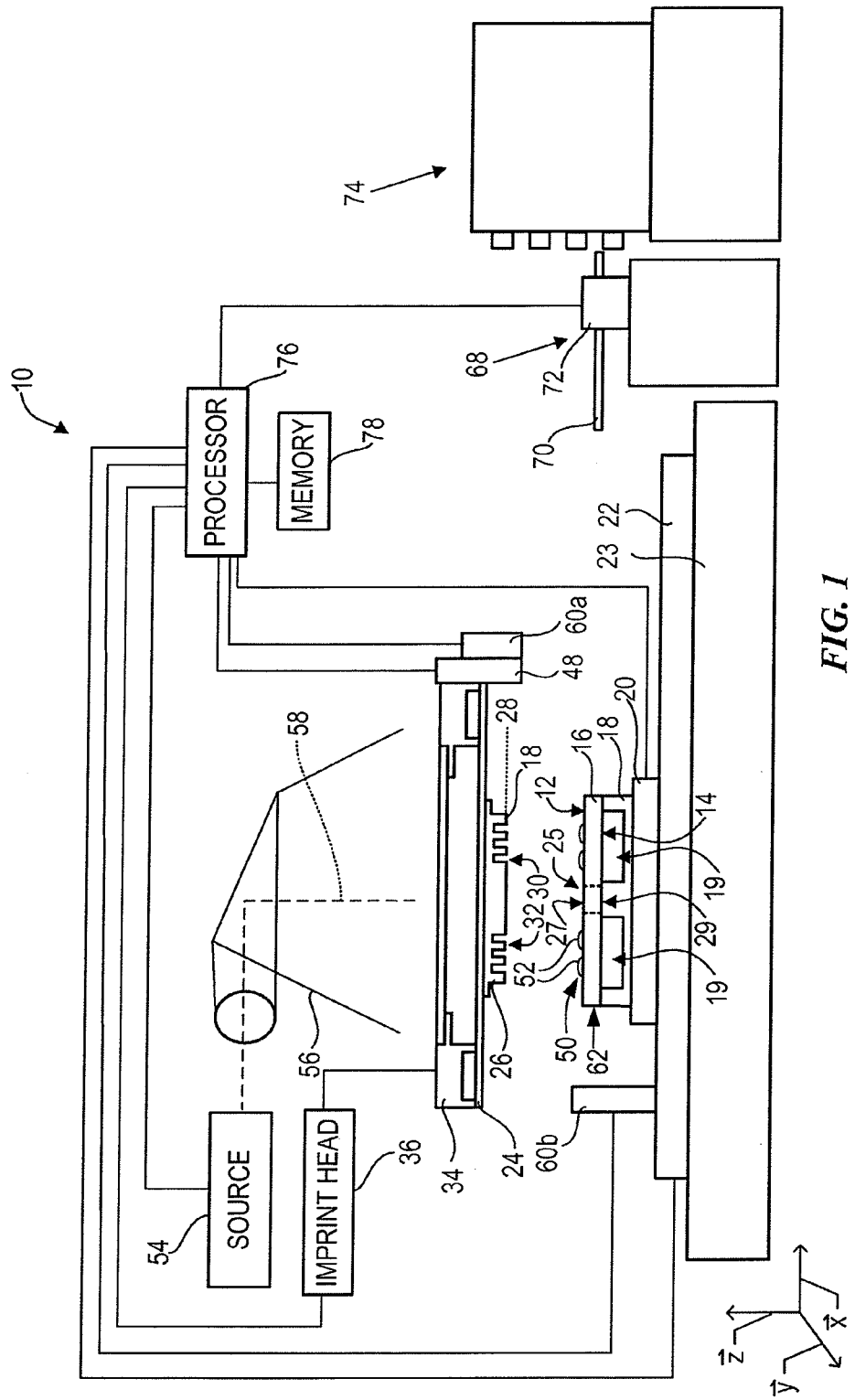
PROCESSOR
MEMORY
SOURCE
IMPRINT HEAD
10
12
14
16
18
19
20
22
23
24
25
26
27
28
29
30
32
34
36
48
50
52
54
56
58
60a
60b
62
68
70
72
74
76
78
x
y
z

FIG. 1

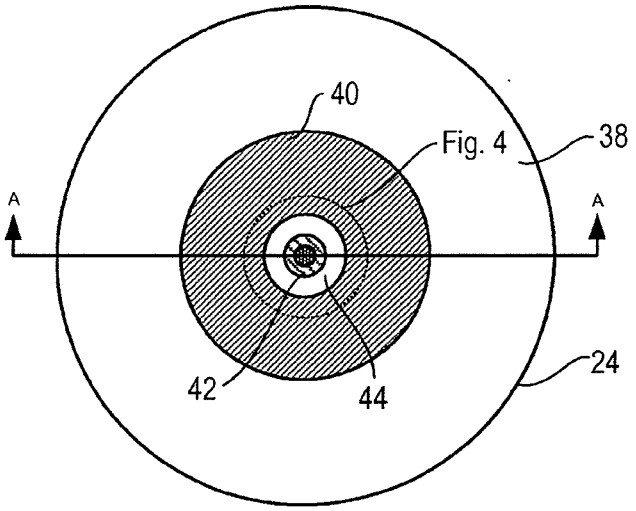

FIG. 2

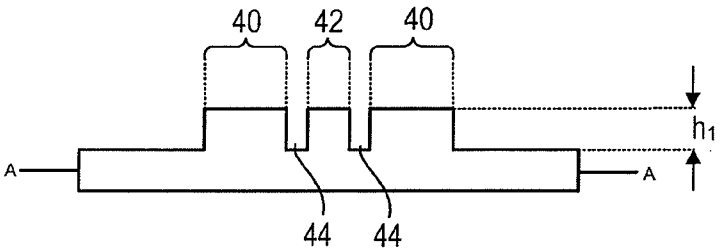

FIG. 3

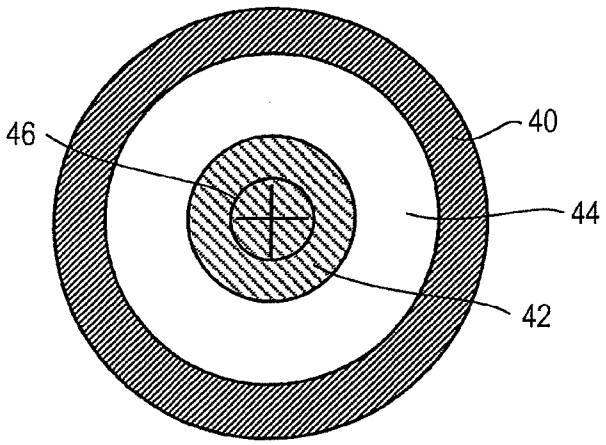

FIG. 4

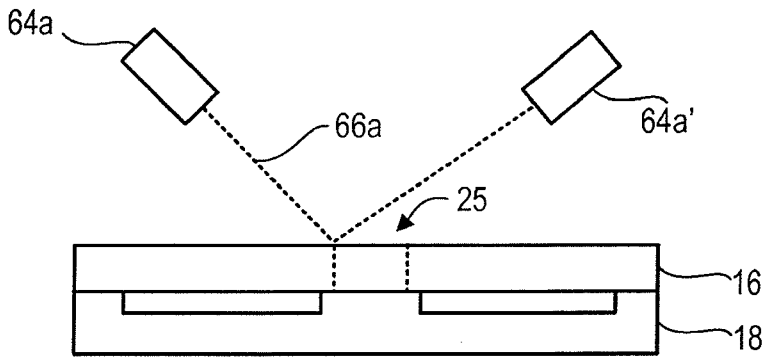

FIG. 5

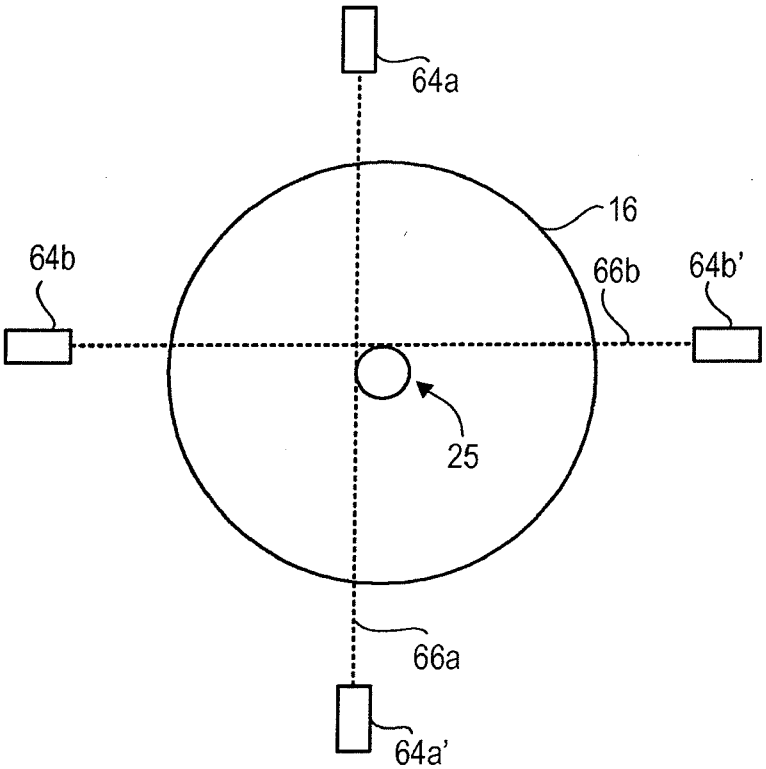

FIG. 6

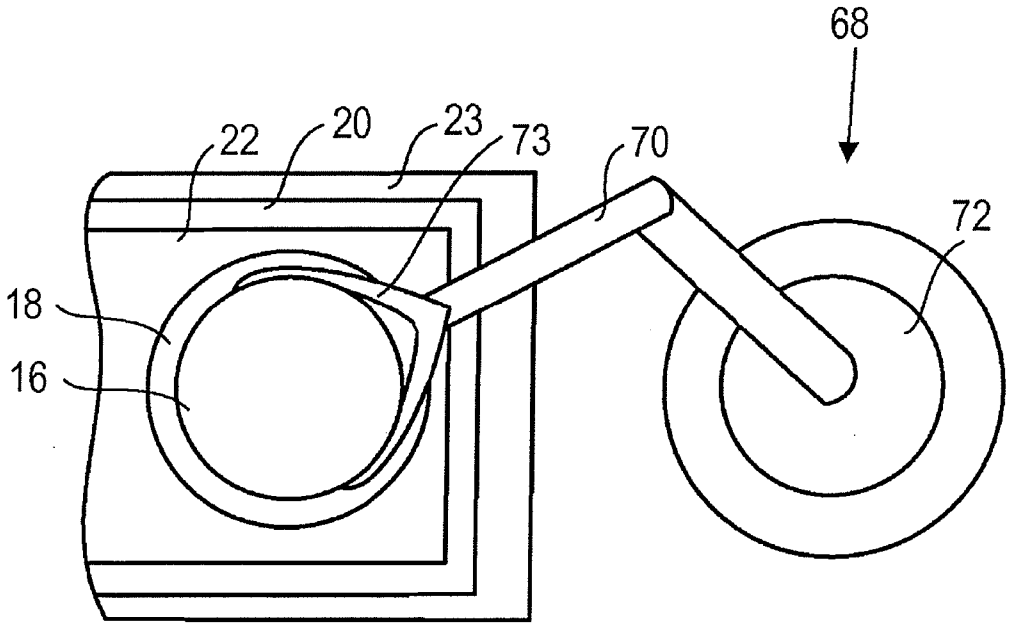

FIG. 7

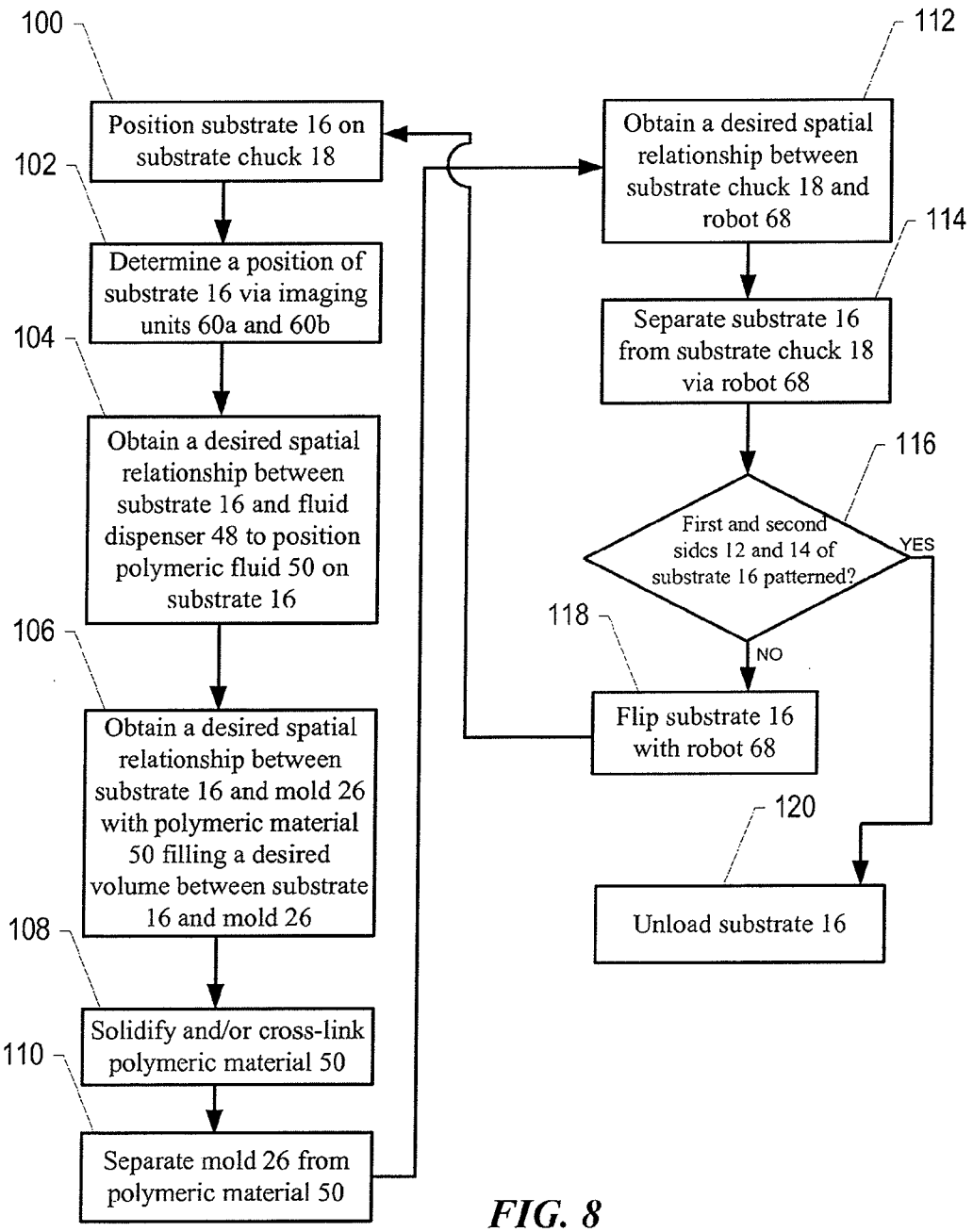
100
Position substrate 16 on substrate chuck 18
102
Determine a position of substrate 16 via imaging units 60a and 60b
104
Obtain a desired spatial relationship between substrate 16 and fluid dispenser 48 to position polymeric fluid 50 on substrate 16
106
Obtain a desired spatial relationship between substrate 16 and mold 26 with polymeric material 50 filling a desired volume between substrate 16 and mold 26
108
Solidify and/or cross-link polymeric material 50
110
Separate mold 26 from polymeric material 50
112
Obtain a desired spatial relationship between substrate chuck 18 and robot 68
114
Separate substrate 16 from substrate chuck 18 via robot 68
116
First and second sides 12 and 14 of substrate 16 patterned?
YES
NO
118
Flip substrate 16 with robot 68
120
Unload substrate 16

FIG. 8

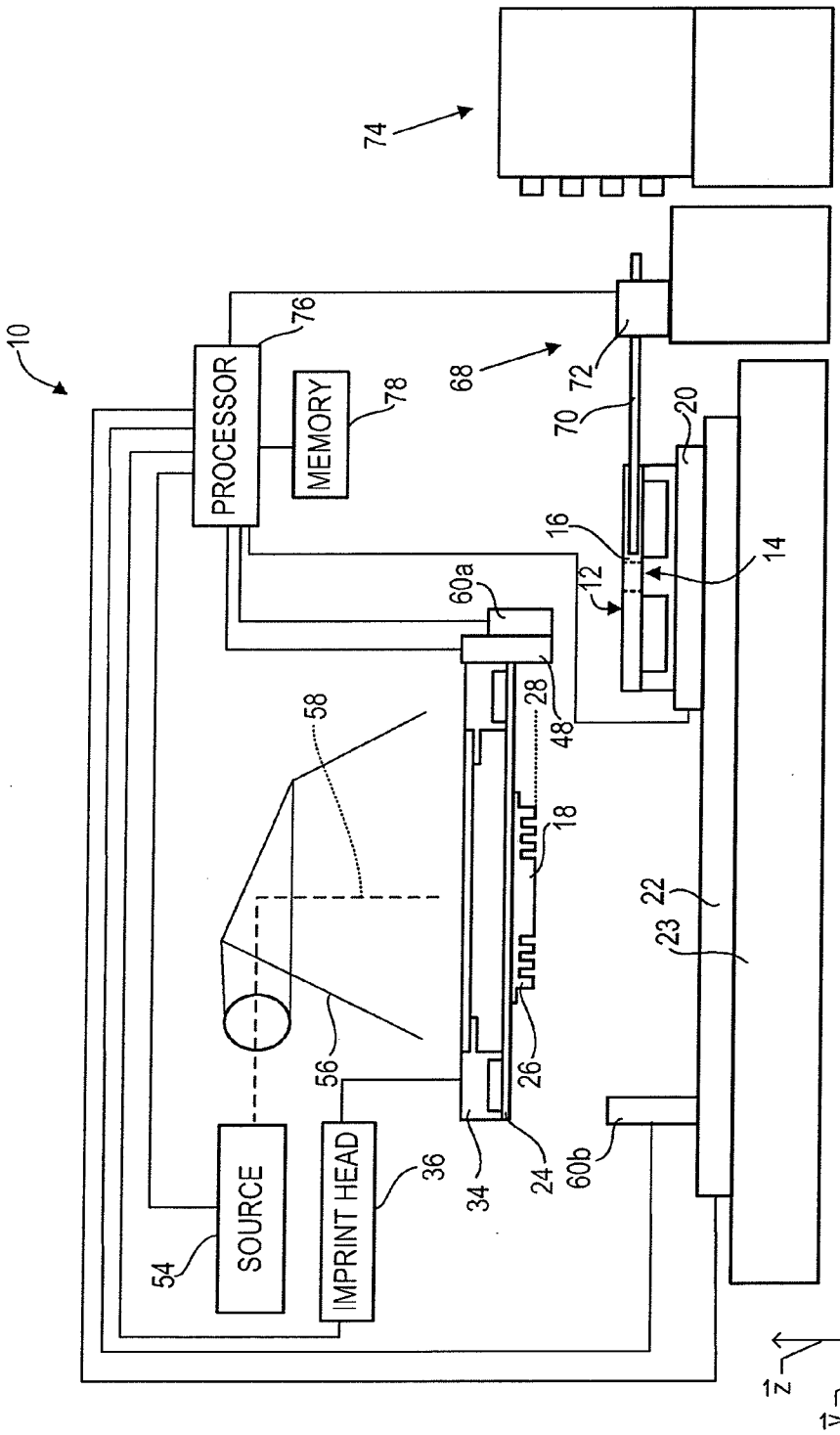
10
74
76
PROCESSOR
MEMORY
78
68
72
70
20
16
14
12
60a
28
48
58
18
22
23
56
26
SOURCE
IMPRINT HEAD
54
36
34
24
60b
z
x
y

FIG. 9

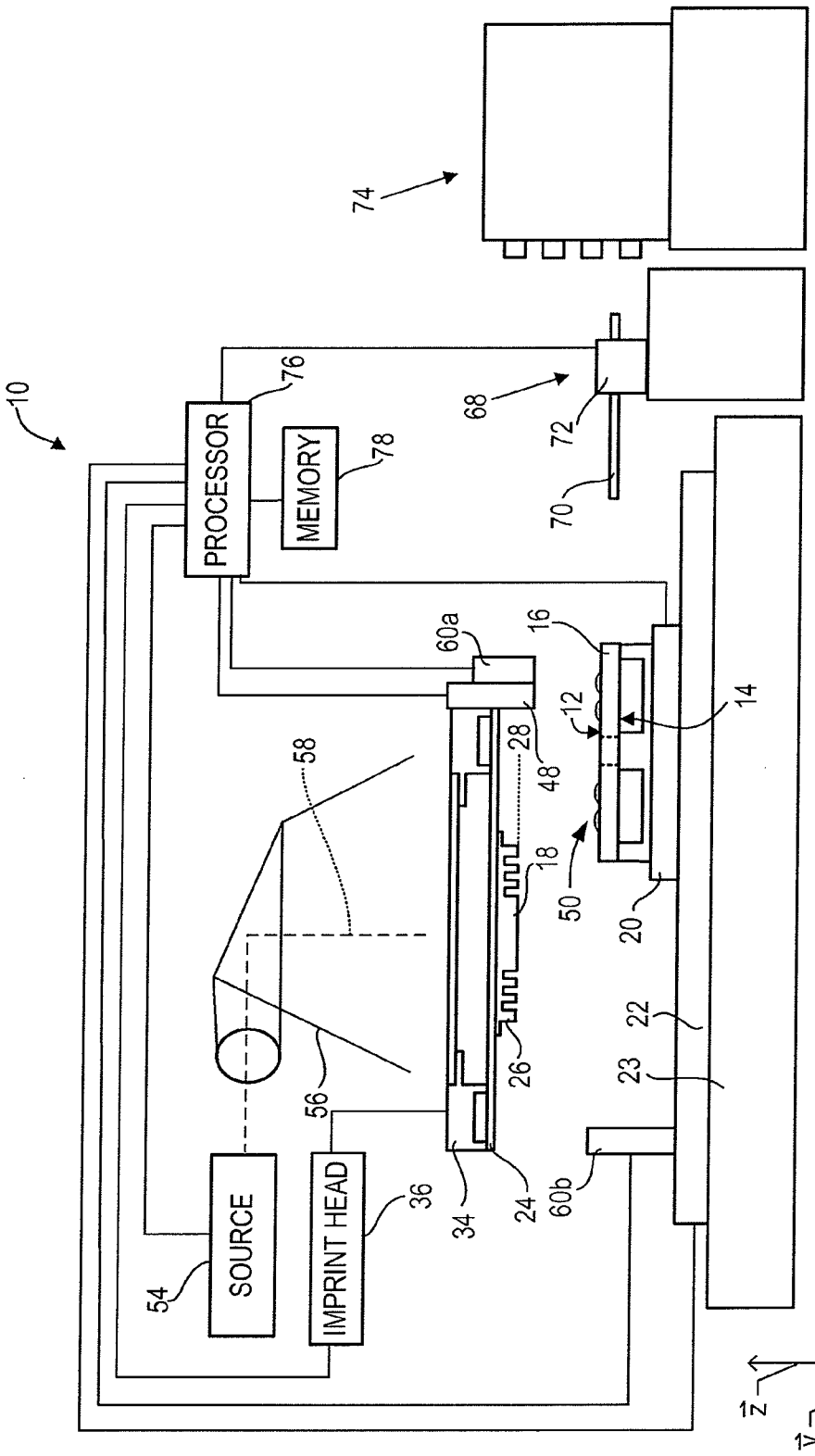
10
74
PROCESSOR
76
MEMORY
78
68
72
70
60a
16
12
14
28
48
58
18
50
20
22
23
26
56
SOURCE
54
IMPRINT HEAD
36
34
24
60b
z
x
y

FIG. 10

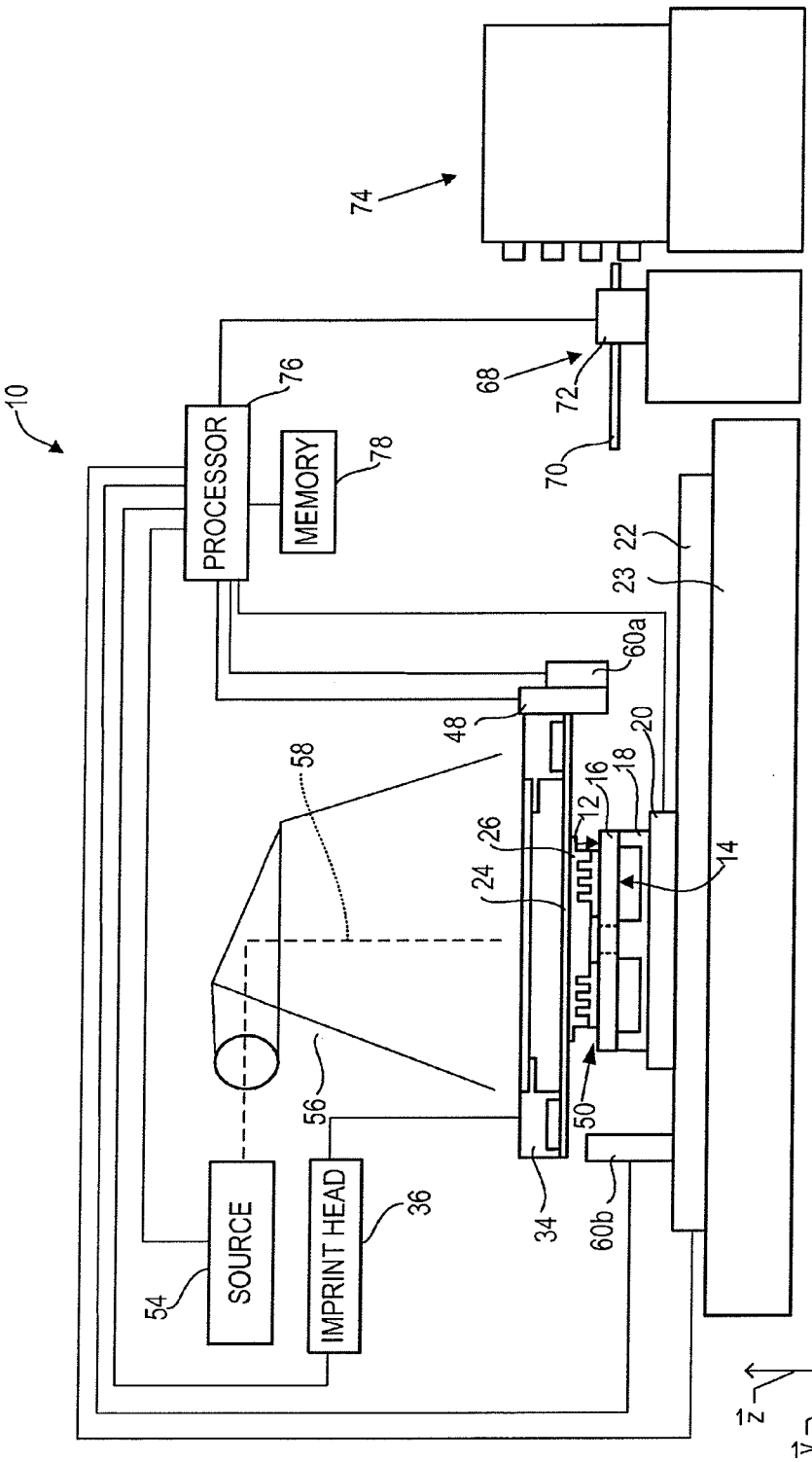
10
74
68
72
70
76
PROCESSOR
78
MEMORY
22
23
60a
48
20
18
16
12
58
26
24
14
50
56
34
60b
36
IMPRINT HEAD
54
SOURCE
z
x
y

FIG. 11

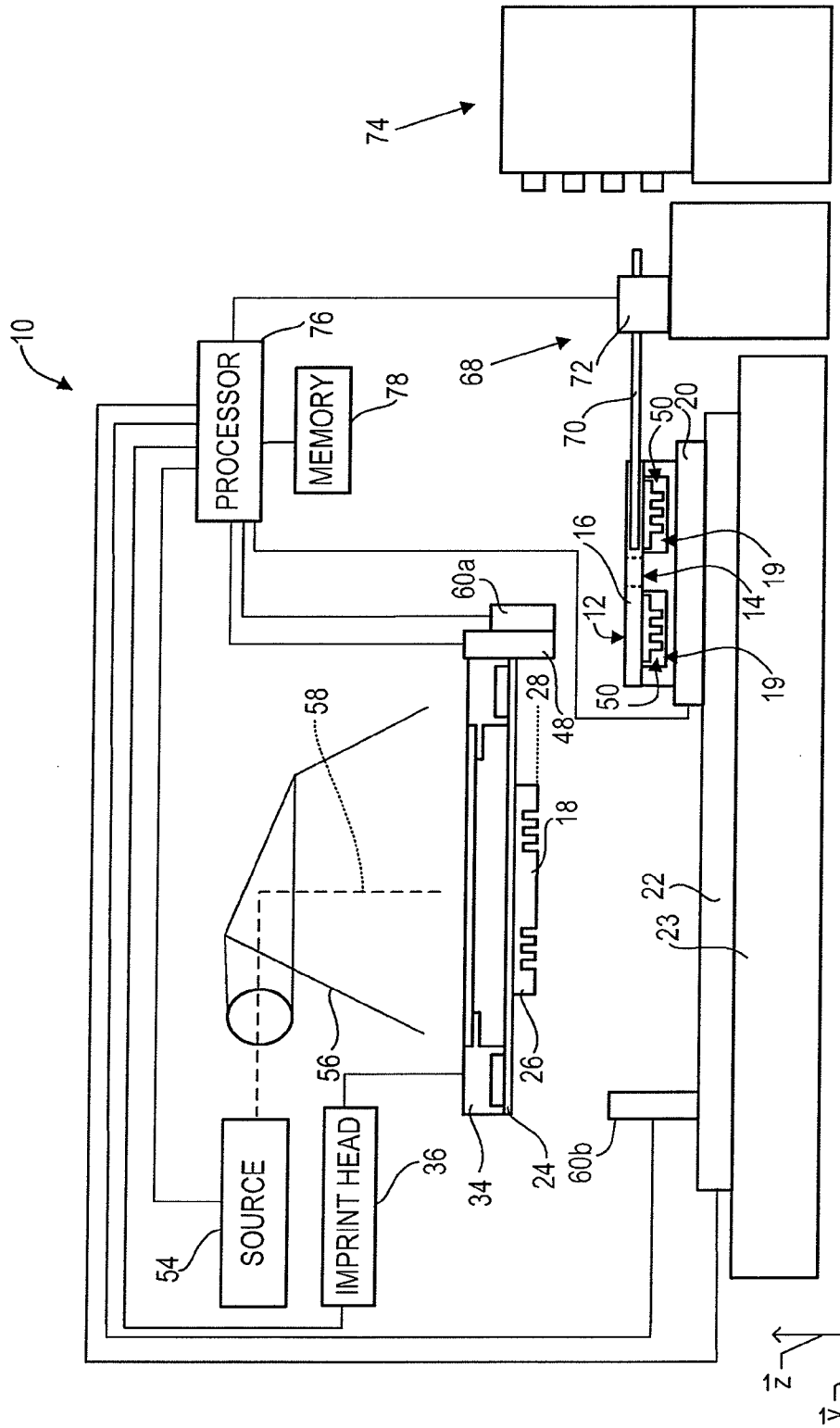
10
74
PROCESSOR
76
MEMORY
78
68
72
70
50
20
16
12
19
14
60a
28
48
58
18
22
23
56
26
SOURCE
54
IMPRINT HEAD
36
34
24
60b
z
x
y

FIG. 12

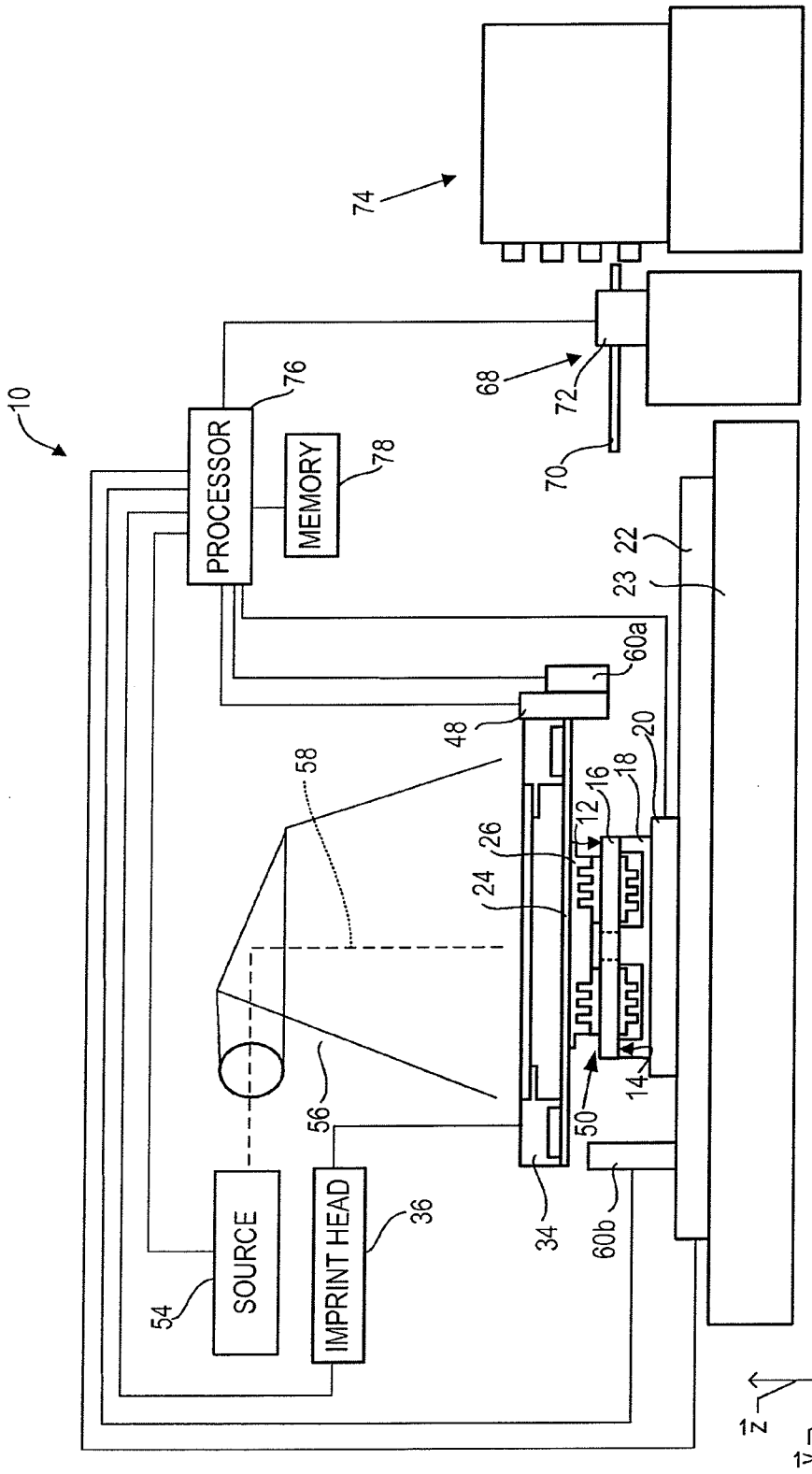
10
74
68
72
70
76
PROCESSOR
78
MEMORY
22
23
60a
48
20
18
16
12
26
24
58
14
50
56
34
60b
36
IMPRINT HEAD
54
SOURCE
z
x
y

FIG. 13

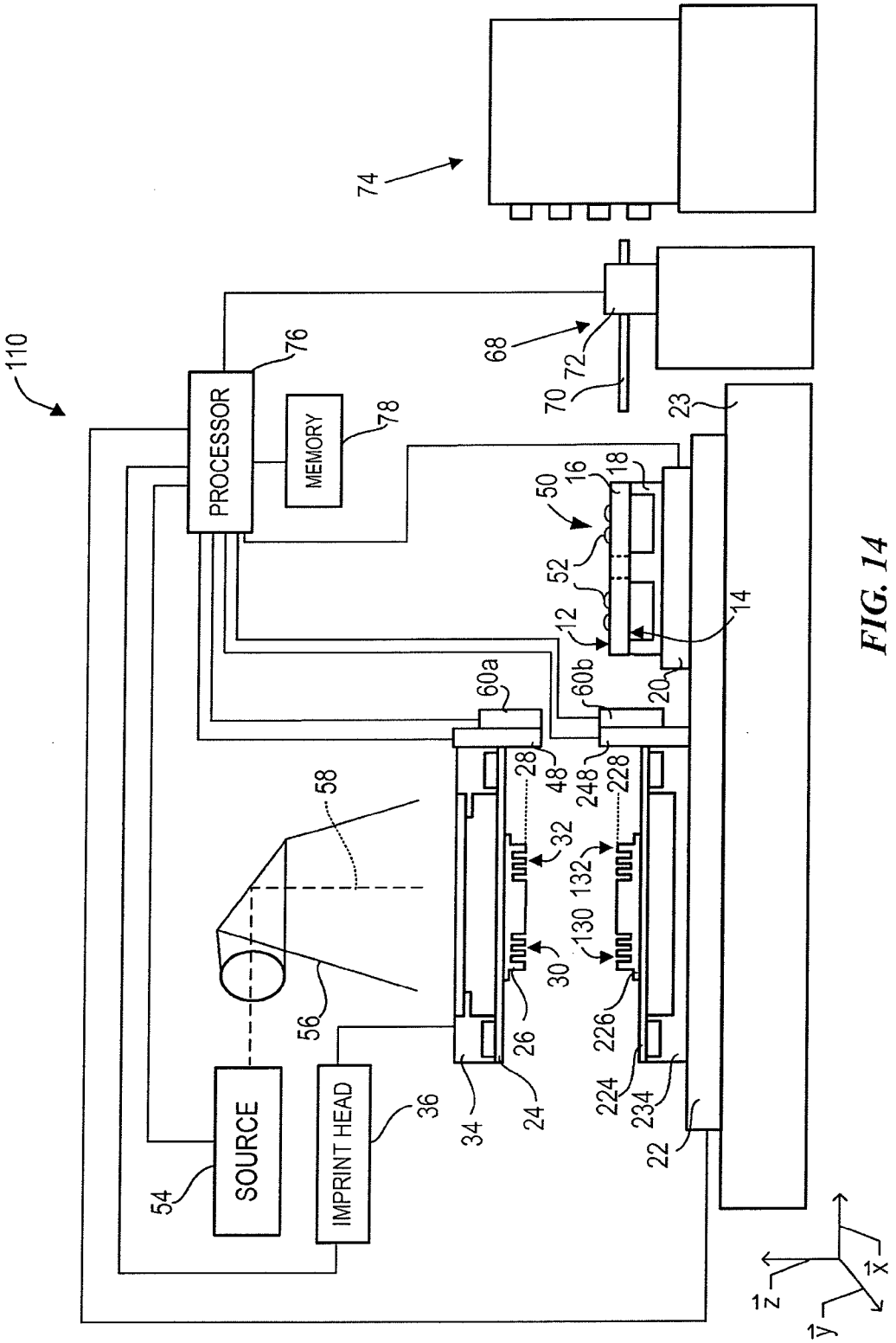
110
PROCESSOR
76
MEMORY
78
74
68
72
70
23
50
16
18
52
12
14
20
60a
60b
28
48
248
228
32
132
130
30
26
226
58
56
SOURCE
54
IMPRINT HEAD
36
34
24
224
234
22
z
y
x

FIG. 14

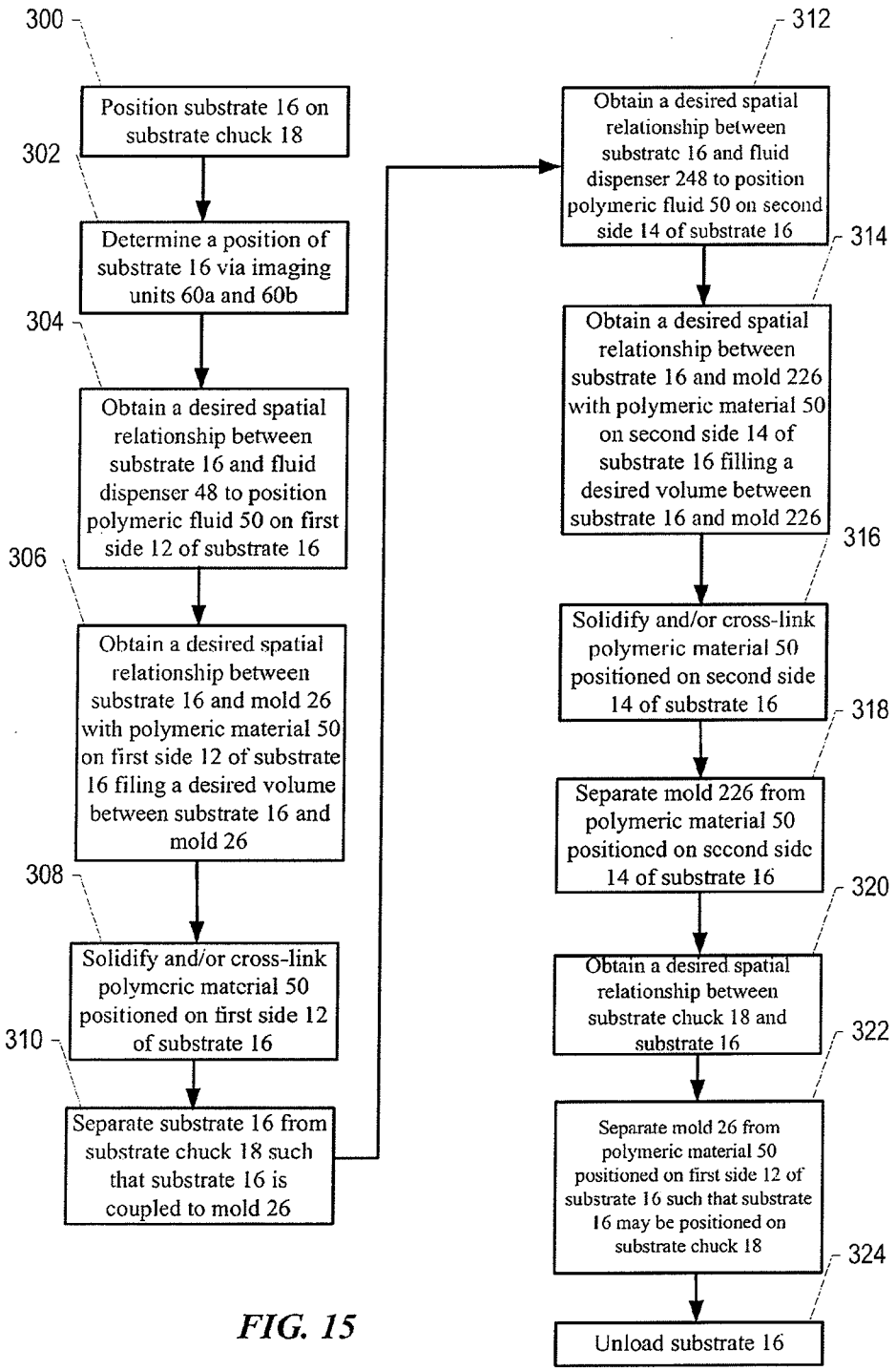
300
Position substrate 16 on substrate chuck 18
302
Determine a position of substrate 16 via imaging units 60a and 60b
304
Obtain a desired spatial relationship between substrate 16 and fluid dispenser 48 to position polymeric fluid 50 on first side 12 of substrate 16
306
Obtain a desired spatial relationship between substrate 16 and mold 26 with polymeric material 50 on first side 12 of substrate 16 filing a desired volume between substrate 16 and mold 26
308
Solidify and/or cross-link polymeric material 50 positioned on first side 12 of substrate 16
310
Separate substrate 16 from substrate chuck 18 such that substrate 16 is coupled to mold 26
312
Obtain a desired spatial relationship between substrate 16 and fluid dispenser 248 to position polymeric fluid 50 on second side 14 of substrate 16
314
Obtain a desired spatial relationship between substrate 16 and mold 226 with polymeric material 50 on second side 14 of substrate 16 filling a desired volume between substrate 16 and mold 226
316
Solidify and/or cross-link polymeric material 50 positioned on second side 14 of substrate 16
318
Separate mold 226 from polymeric material 50 positioned on second side 14 of substrate 16
320
Obtain a desired spatial relationship between substrate chuck 18 and substrate 16
322
Separate mold 26 from polymeric material 50 positioned on first side 12 of substrate 16 such that substrate 16 may be positioned on substrate chuck 18
324
Unload substrate 16

FIG. 15

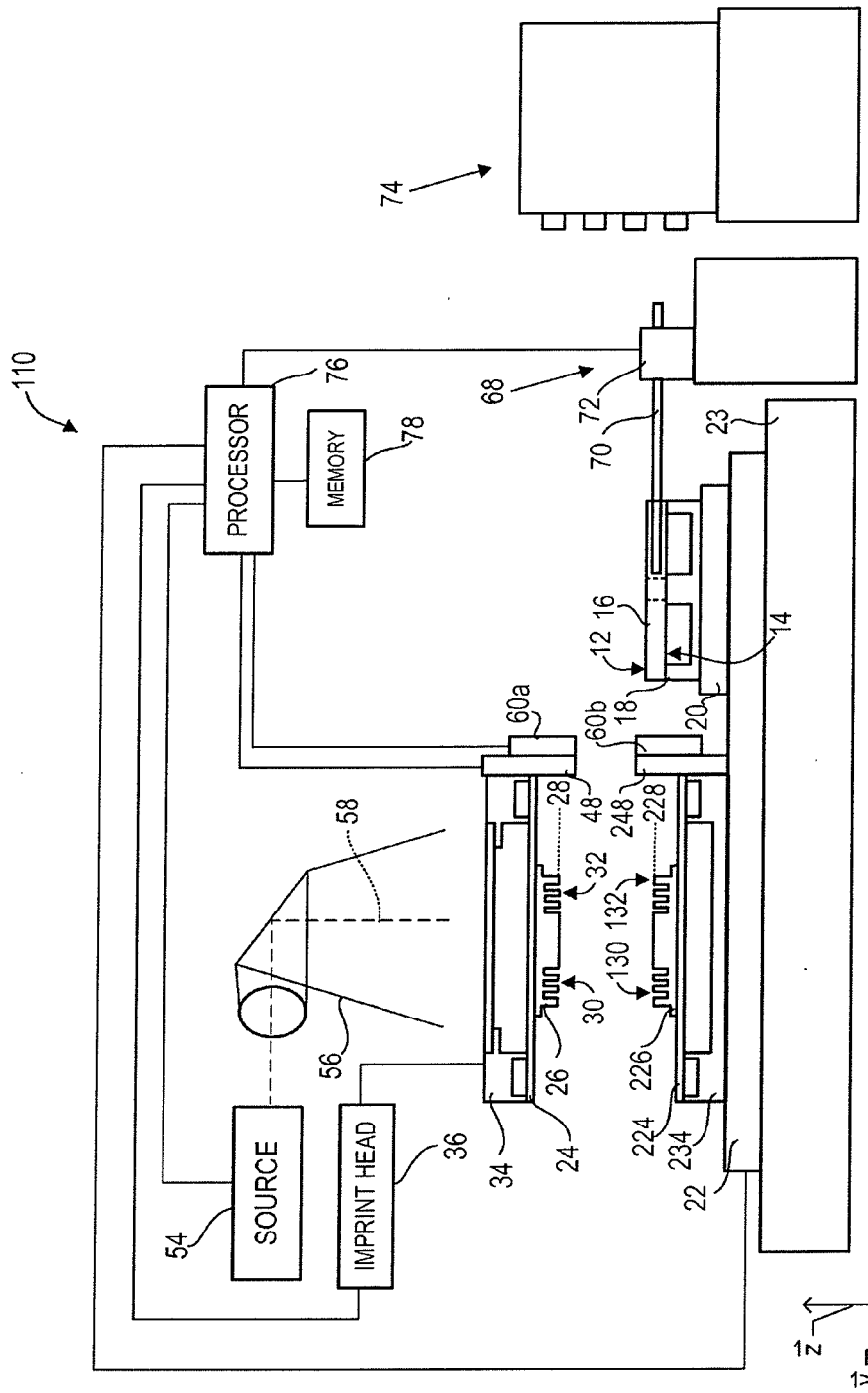
110
74
PROCESSOR
MEMORY
76
78
68
72
70
23
12
16
14
18
20
60a
60b
28
48
248
228
32
132
130
30
58
56
26
226
224
234
22
34
24
36
54
SOURCE
IMPRINT HEAD
z
x
y

FIG. 16

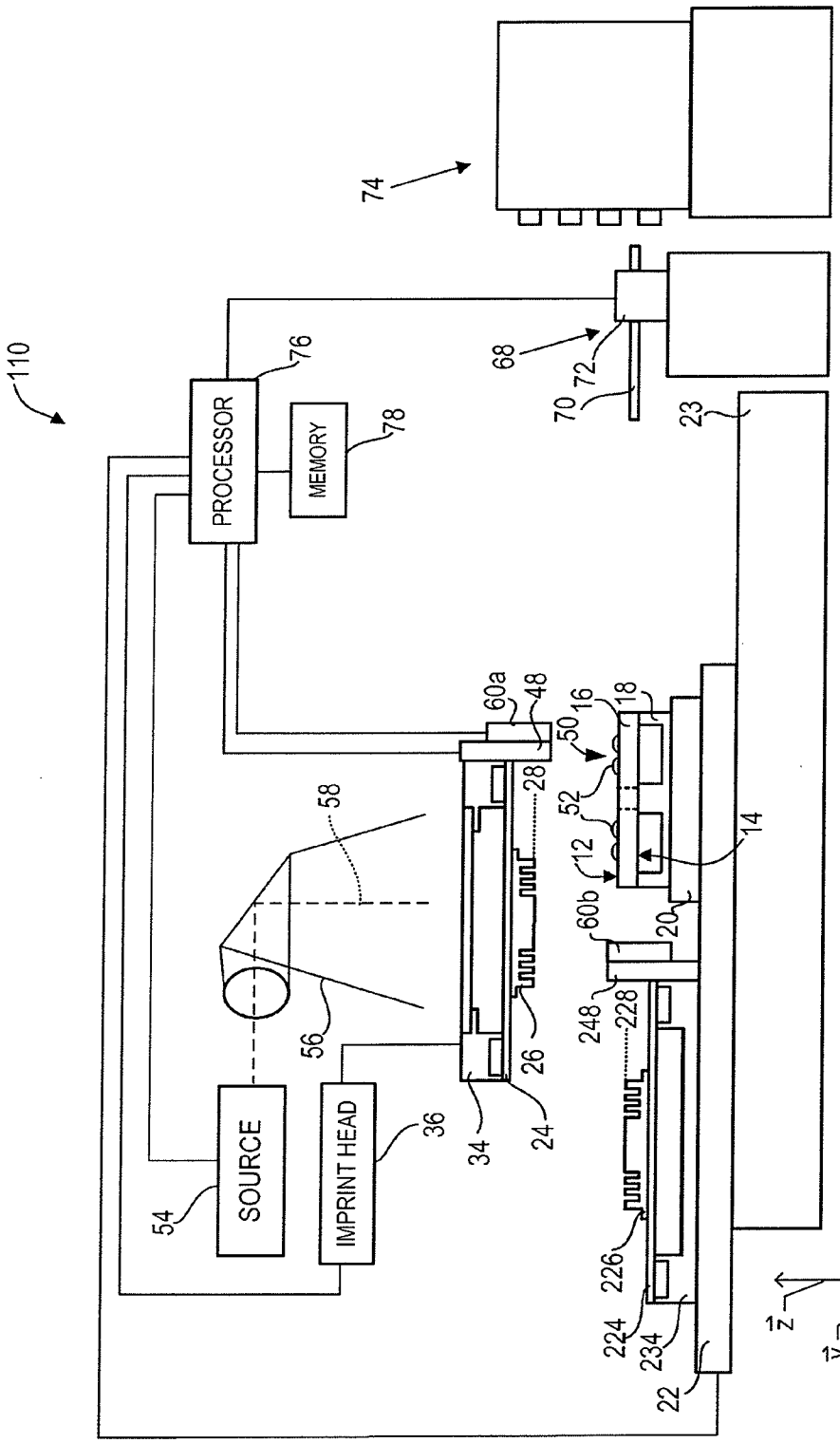
110
PROCESSOR
76
MEMORY
78
74
68
72
70
23
60a
48
50
16
18
52
12
14
28
58
56
60b
20
248
228
26
34
24
SOURCE
54
IMPRINT HEAD
36
226
224
234
22
z
y
x

FIG. 17

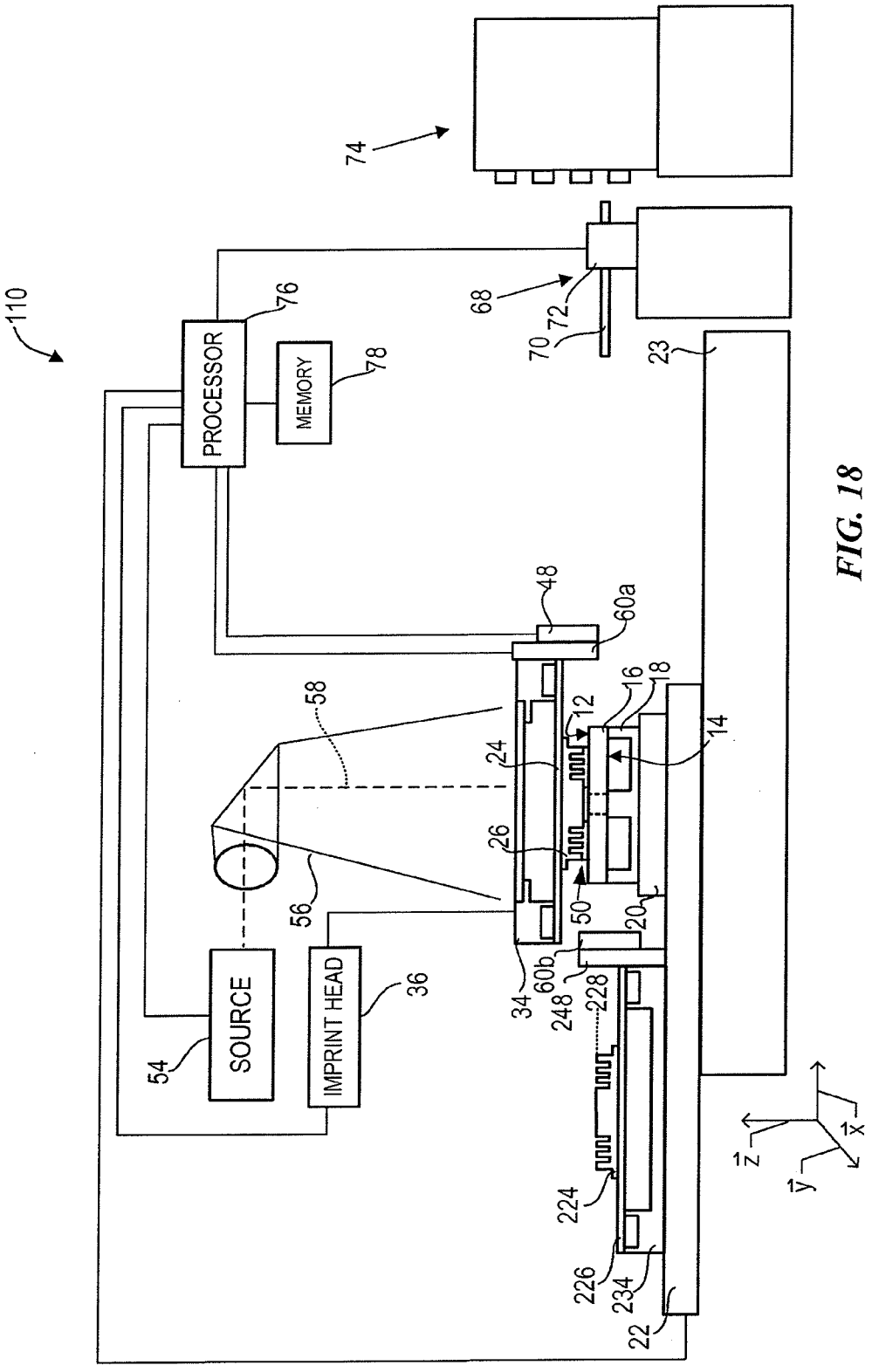
110
74
68
72
70
23
76
PROCESSOR
78
MEMORY
48
60a
58
16
18
12
14
24
26
56
50
20
34
60b
248
228
54
SOURCE
IMPRINT HEAD
36
224
226
234
22
z
x
y

FIG. 18

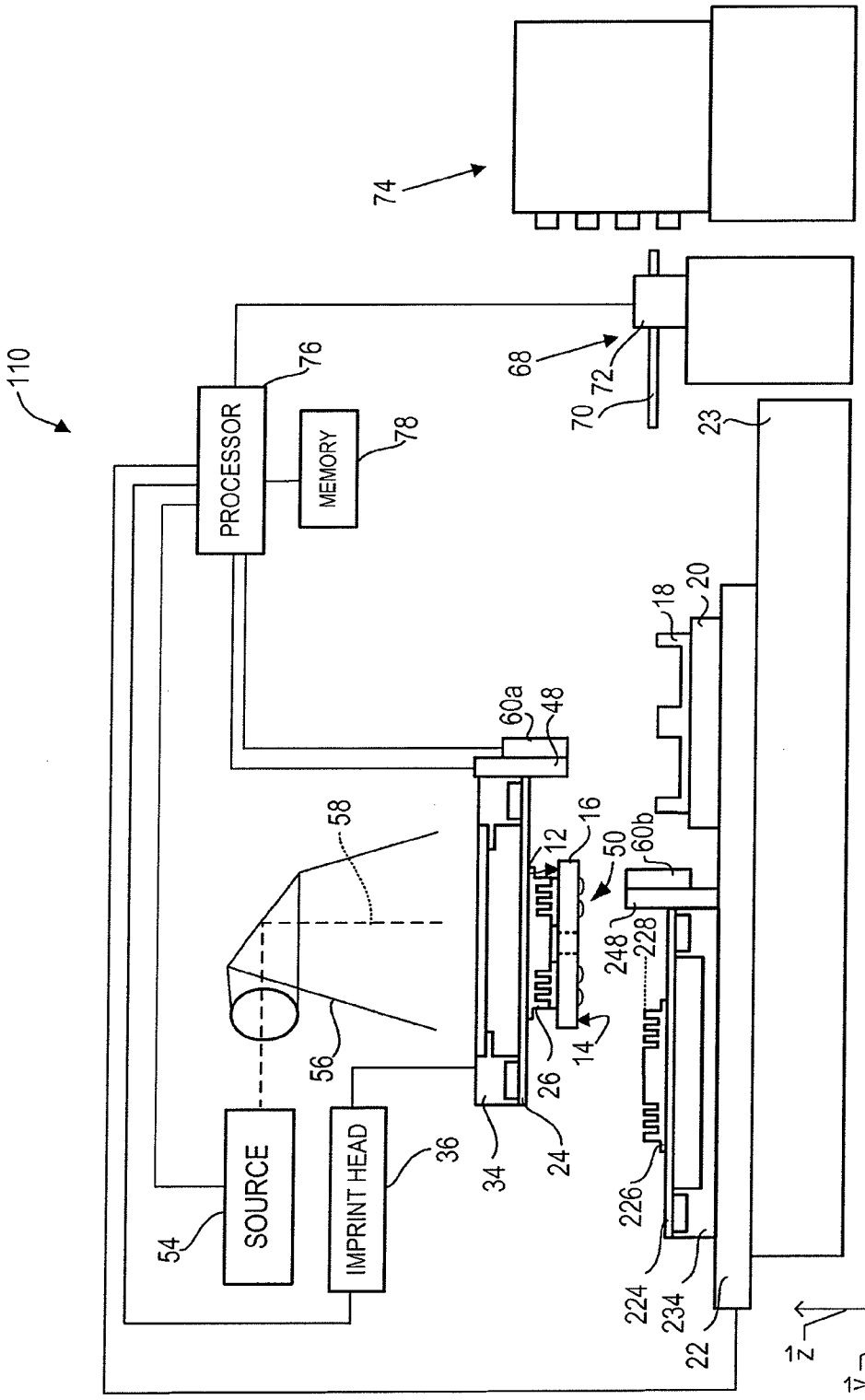
110
74
68
72
70
23
PROCESSOR
76
MEMORY
78
18
20
60a
48
58
16
12
50
60b
248
228
56
14
26
34
24
SOURCE
54
IMPRINT HEAD
36
226
224
234
22
z
x
y

FIG. 19

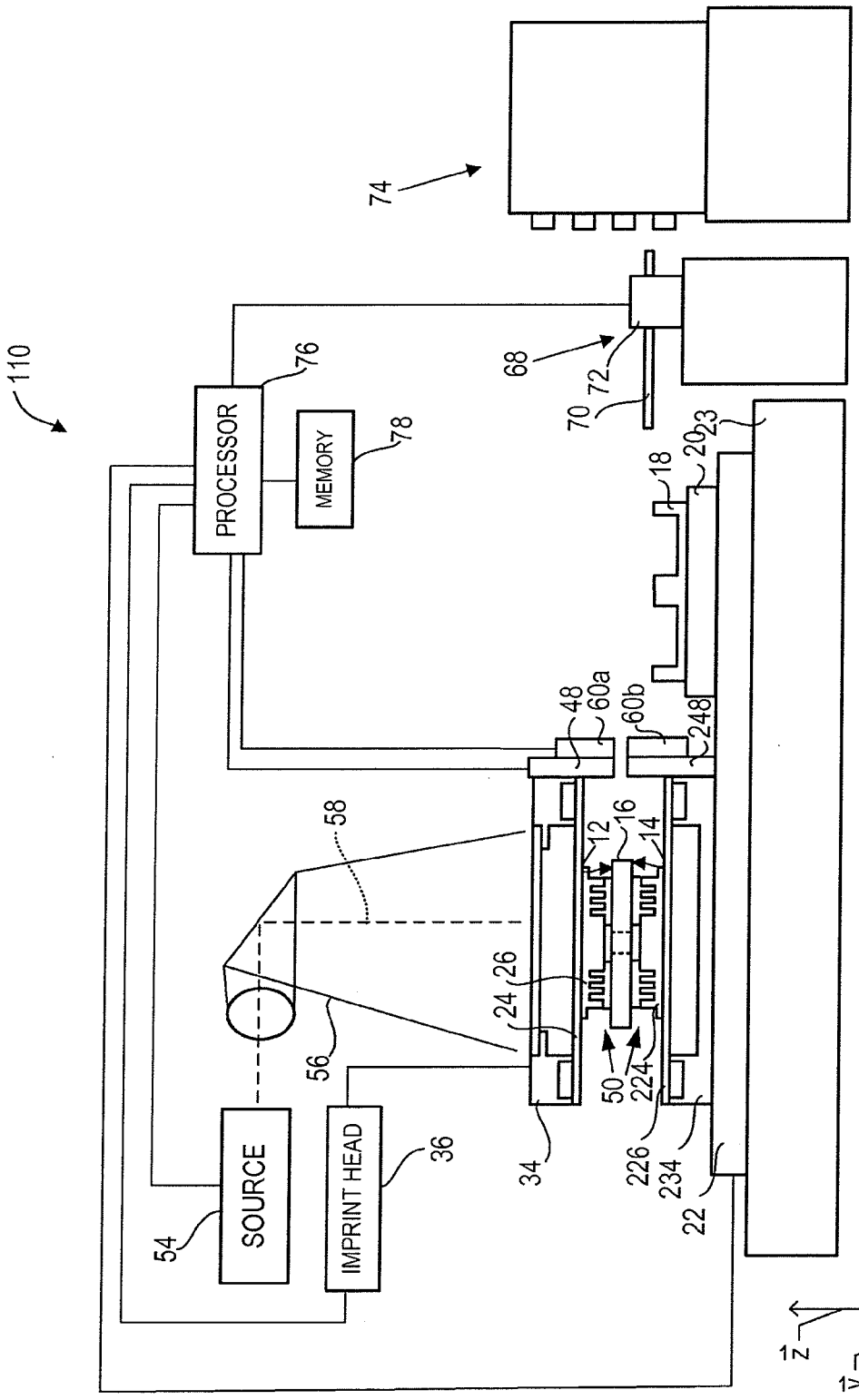
110
74
68
72
70
76
PROCESSOR
78
MEMORY
18
20
23
48
60a
60b
248
58
12
16
14
26
24
56
50
224
54
SOURCE
IMPRINT HEAD
36
34
226
234
22
z
x
y

FIG. 20

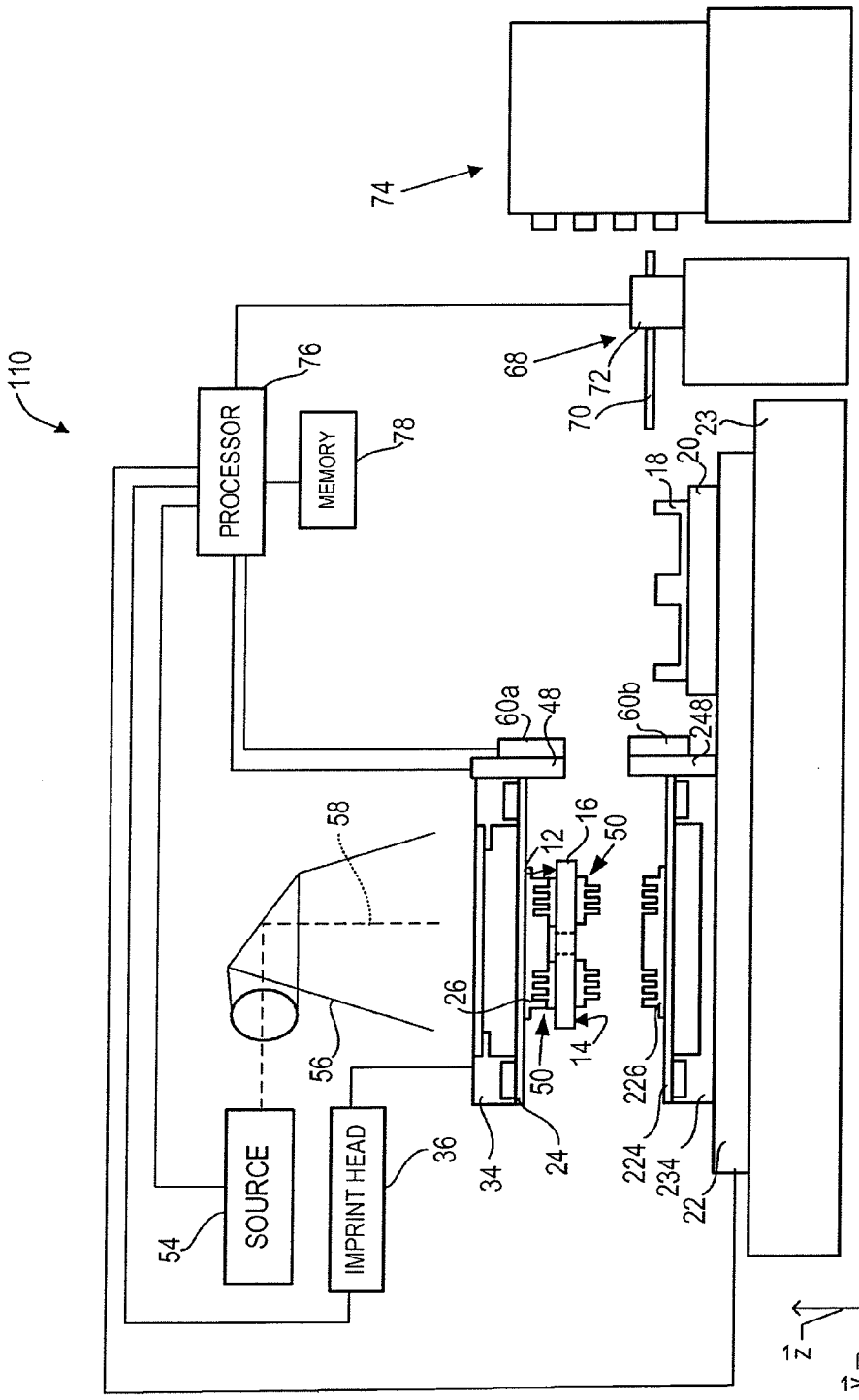
110
PROCESSOR
76
MEMORY
78
74
68
72
70
23
18
20
60a
48
60b
248
58
12
16
50
26
14
50
56
SOURCE
54
IMPRINT HEAD
36
34
24
226
224
234
22
z
y
x

FIG. 21

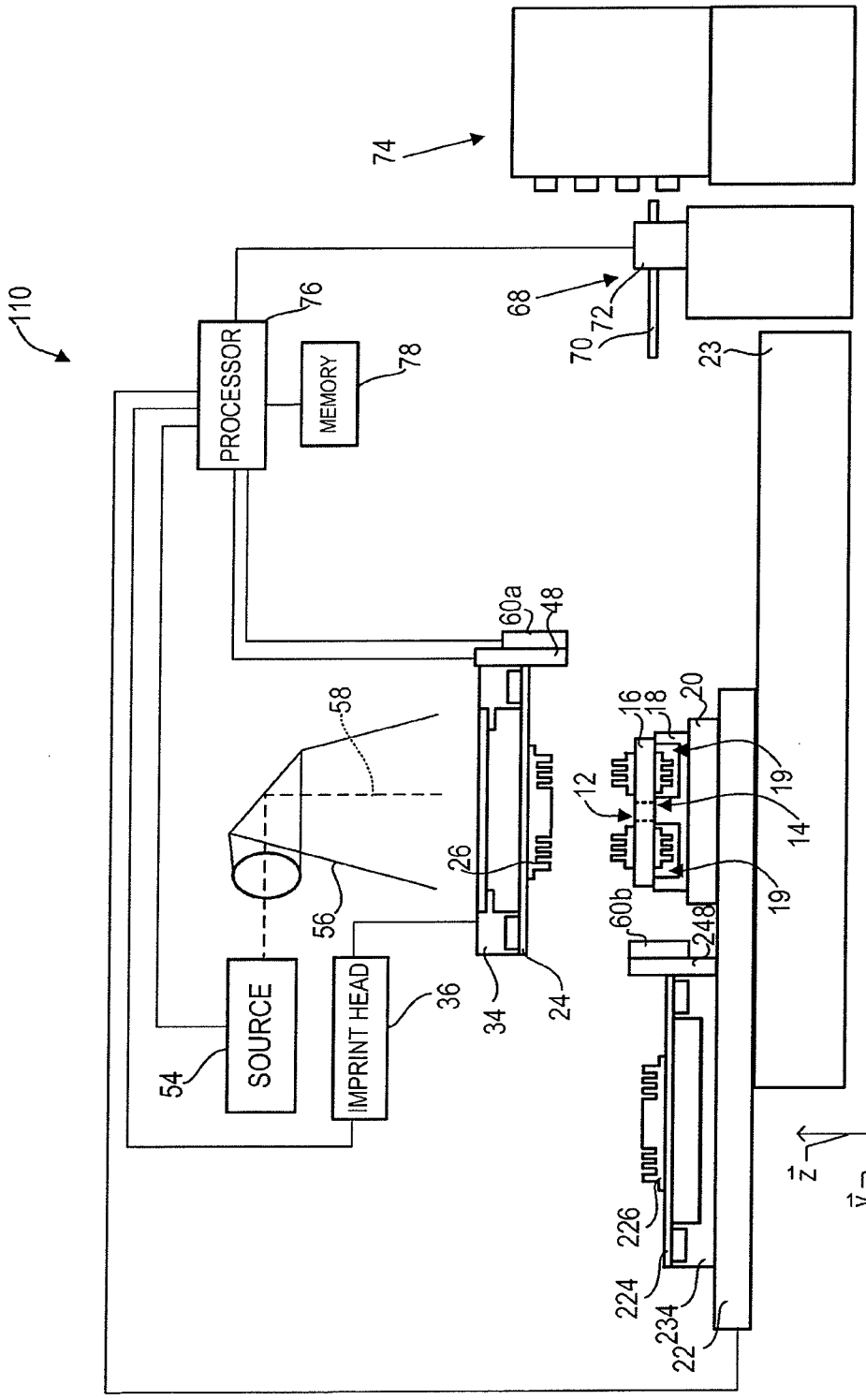
110
PROCESSOR
76
MEMORY
78
74
68
72
70
23
60a
48
58
56
26
34
24
SOURCE
54
IMPRINT HEAD
36
12
16
18
20
19
14
19
60b
248
226
224
234
22
z
y
x

FIG. 22

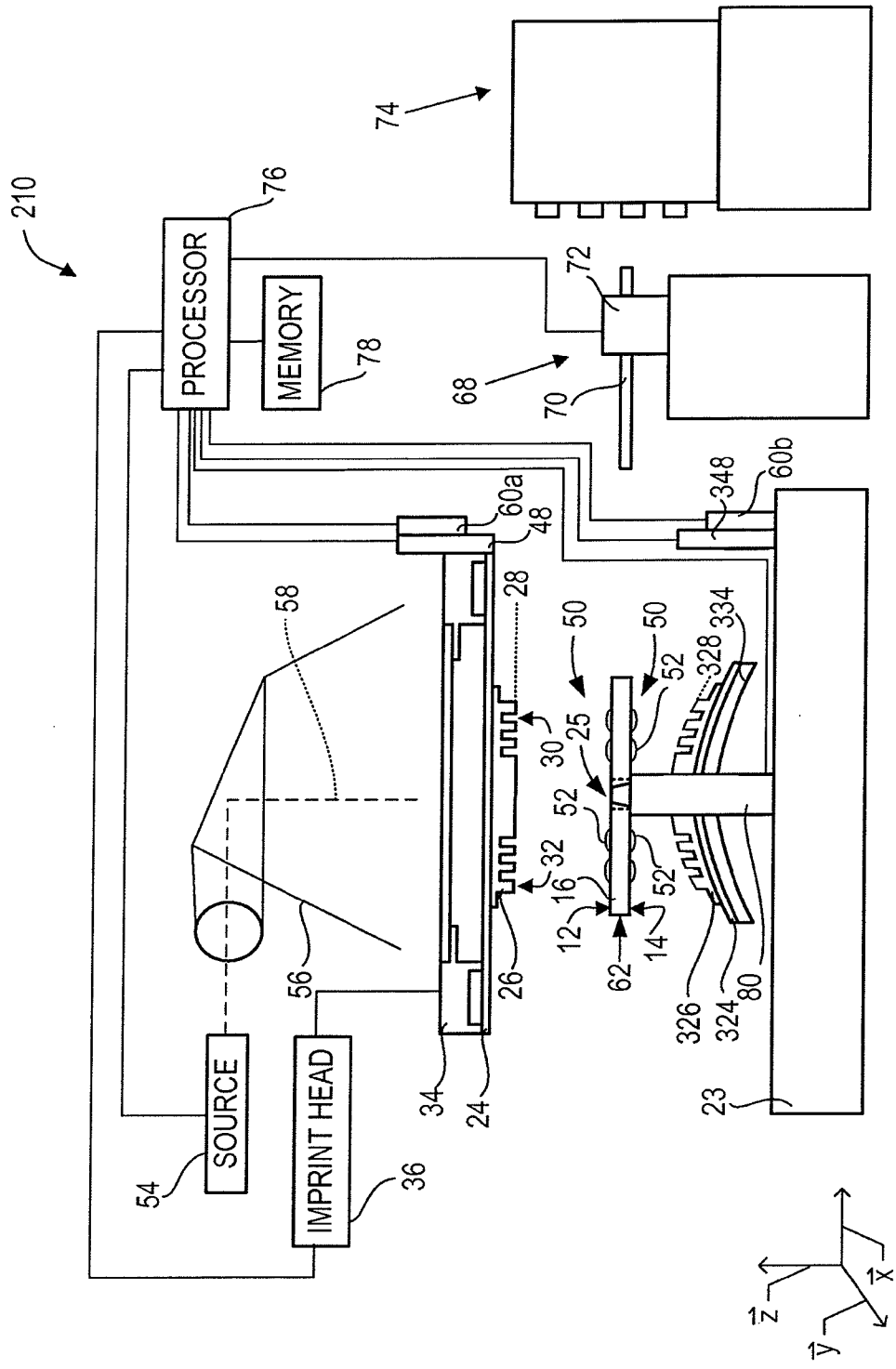
210
74
76
PROCESSOR
MEMORY
78
72
68
70
348
60b
60a
48
28
58
50
50
334
328
52
25
30
52
32
16
52
12
14
62
26
56
326
324
80
34
24
23
SOURCE
54
IMPRINT HEAD
36
z
x
y

FIG. 23

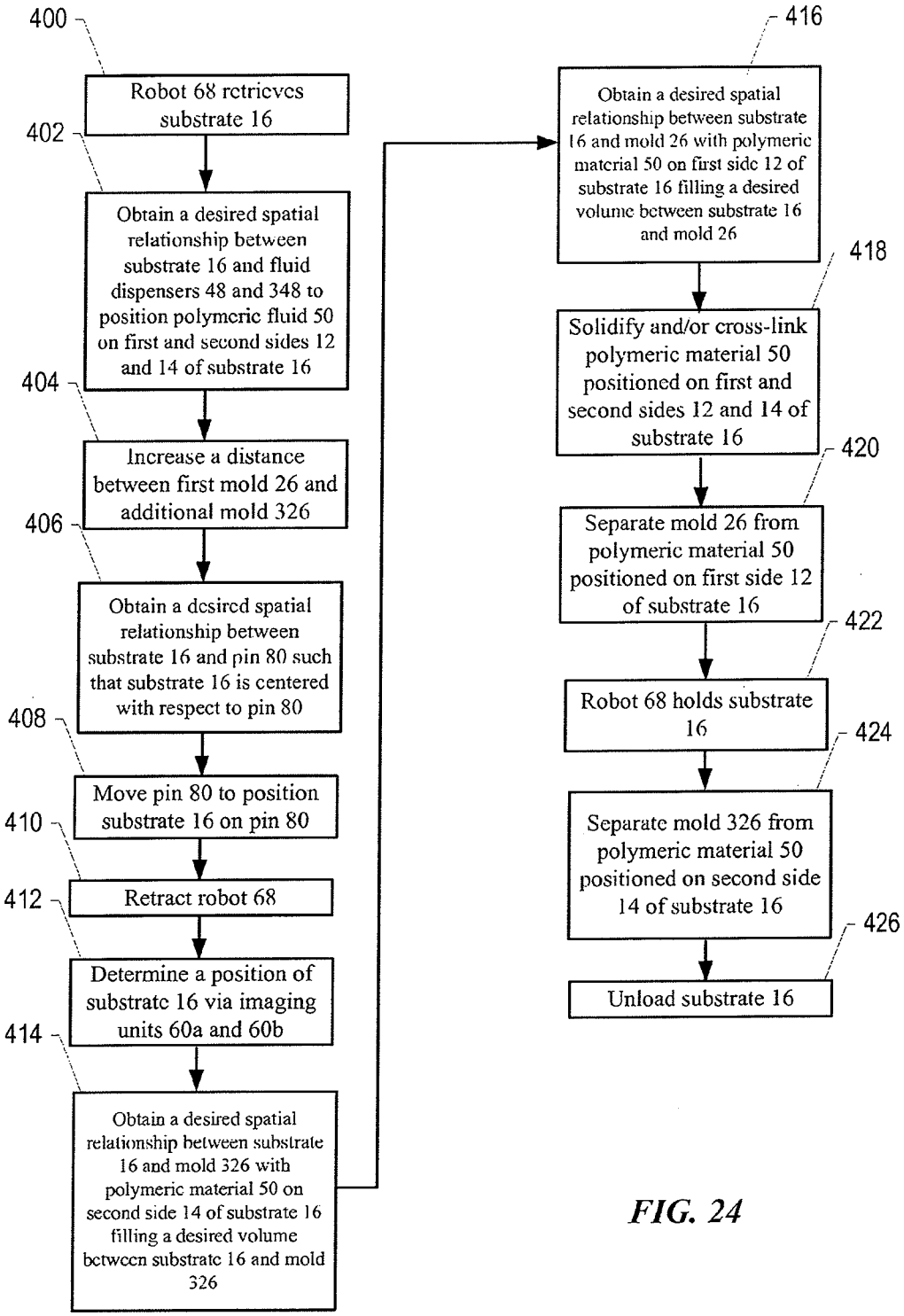
400
Robot 68 retrieves substrate 16
402
Obtain a desired spatial relationship between substrate 16 and fluid dispensers 48 and 348 to position polymeric fluid 50 on first and second sides 12 and 14 of substrate 16
404
Increase a distance between first mold 26 and additional mold 326
406
Obtain a desired spatial relationship between substrate 16 and pin 80 such that substrate 16 is centered with respect to pin 80
408
Move pin 80 to position substrate 16 on pin 80
410
Retract robot 68
412
Determine a position of substrate 16 via imaging units 60a and 60b
414
Obtain a desired spatial relationship between substrate 16 and mold 326 with polymeric material 50 on second side 14 of substrate 16 filling a desired volume between substrate 16 and mold 326
416
Obtain a desired spatial relationship between substrate 16 and mold 26 with polymeric material 50 on first side 12 of substrate 16 filling a desired volume between substrate 16 and mold 26
418
Solidify and/or cross-link polymeric material 50 positioned on first and second sides 12 and 14 of substrate 16
420
Separate mold 26 from polymeric material 50 positioned on first side 12 of substrate 16
422
Robot 68 holds substrate 16
424
Separate mold 326 from polymeric material 50 positioned on second side 14 of substrate 16
426
Unload substrate 16

FIG. 24

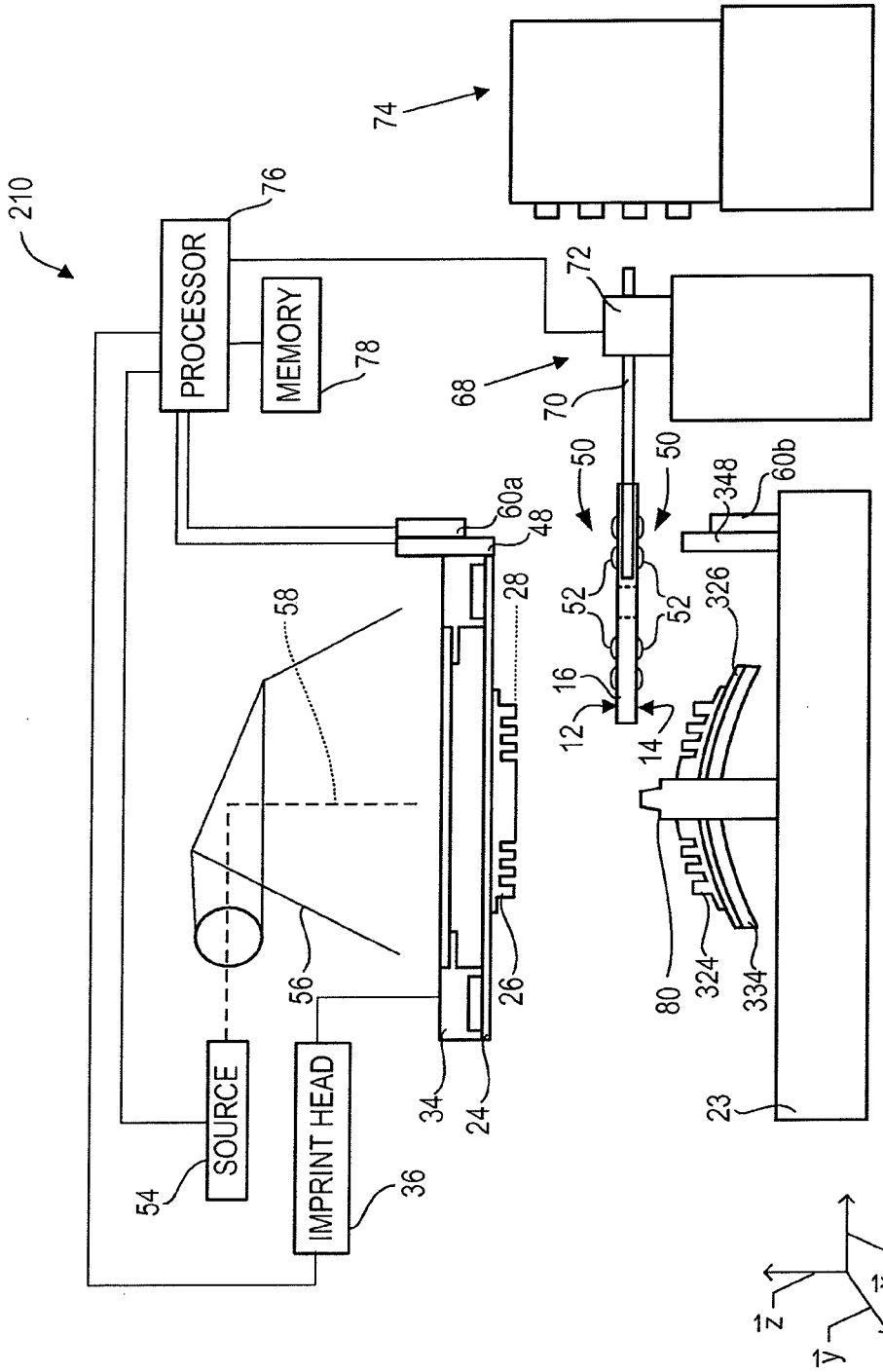
210
74
76
PROCESSOR
MEMORY
78
72
68
70
50
50
60a
48
348
60b
28
58
52
52
326
16
12
14
56
26
80
324
334
34
24
23
SOURCE
IMPRINT HEAD
54
36
z
x
y

FIG. 25

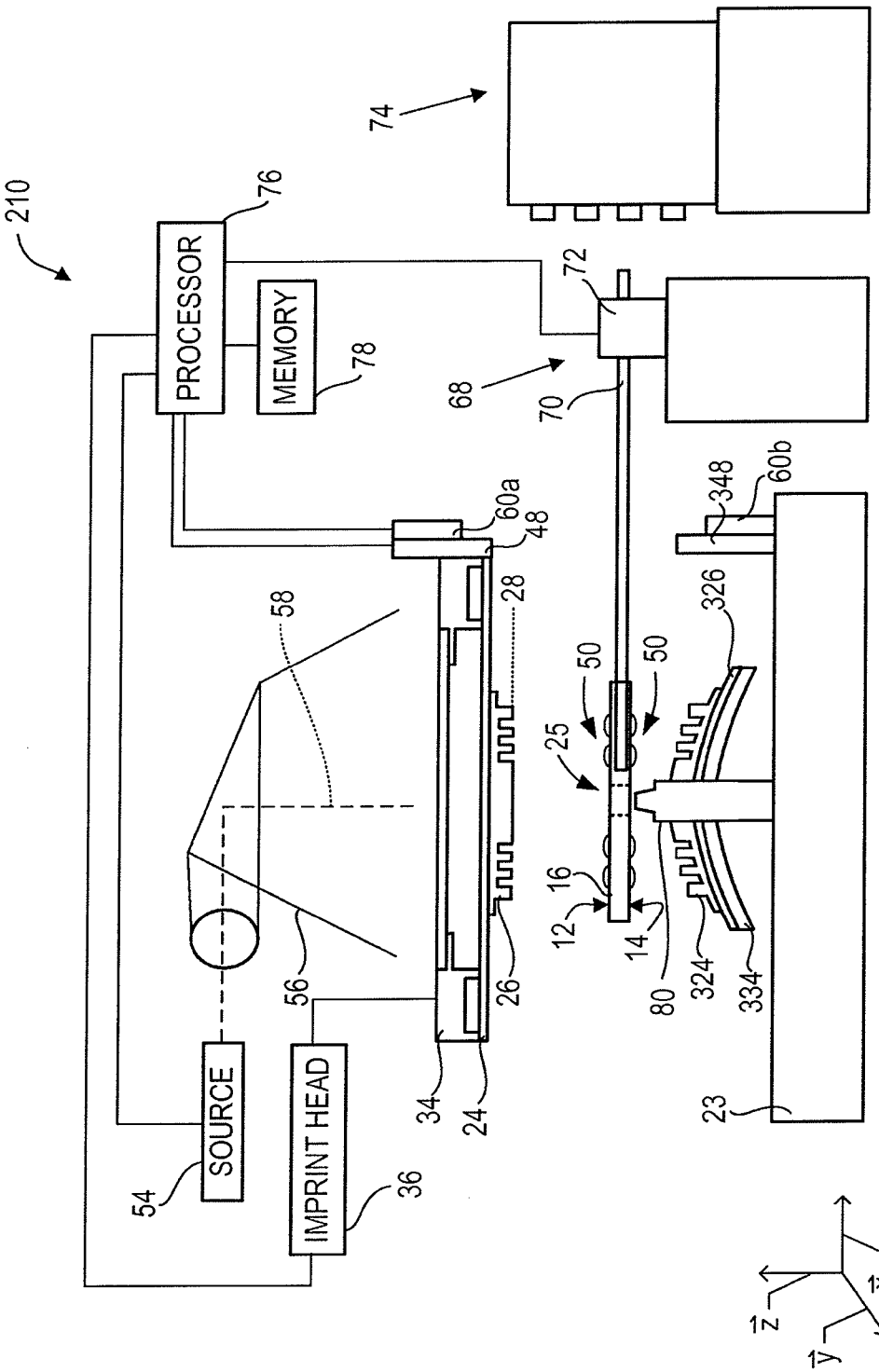
210
74
76
PROCESSOR
MEMORY
78
72
68
70
60a
48
28
58
50
50
25
326
348
60b
16
12
14
80
324
334
56
26
34
24
23
SOURCE
IMPRINT HEAD
54
36
x
z
y

FIG. 26

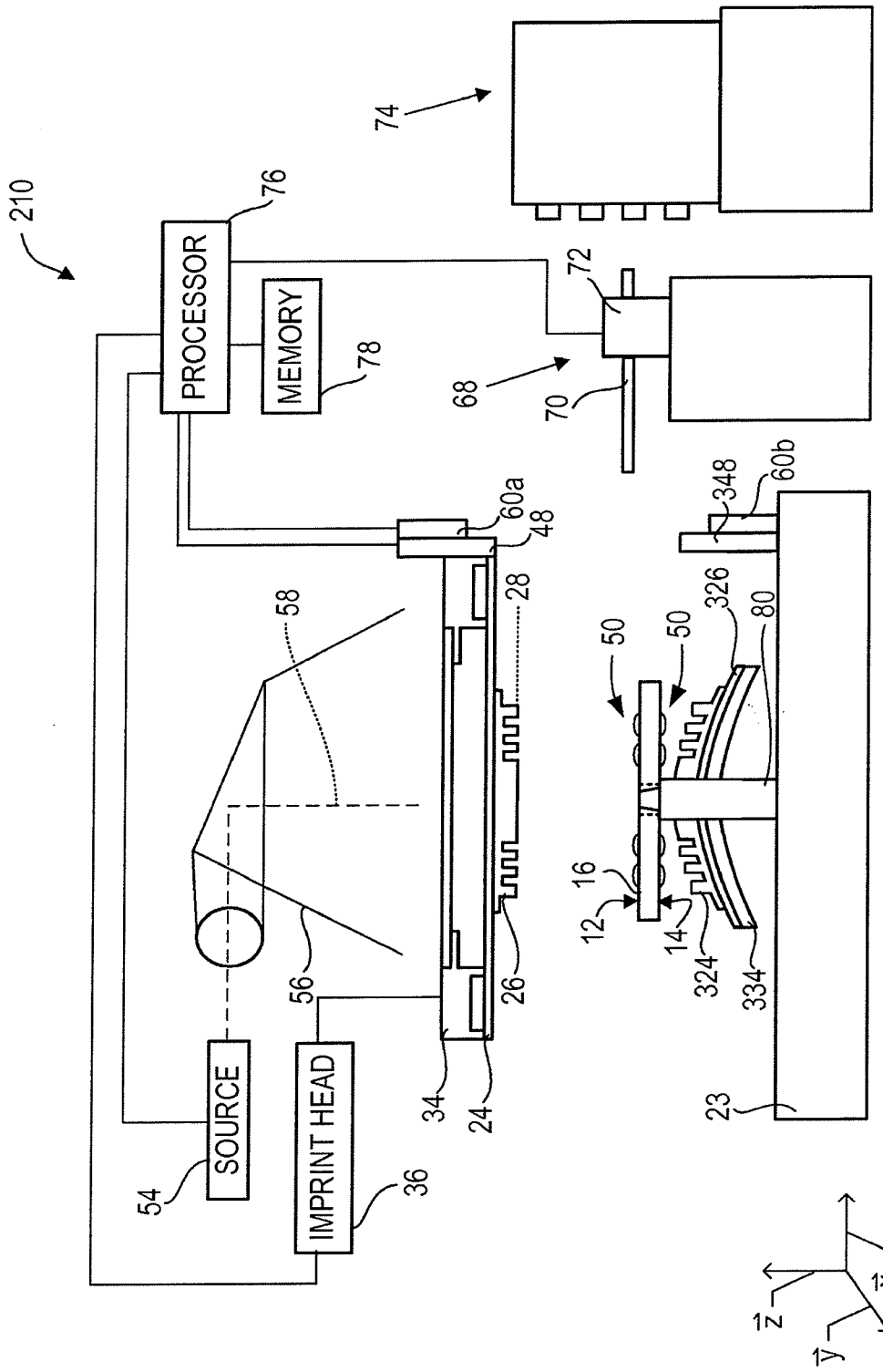
210
PROCESSOR
76
MEMORY
78
74
72
68
70
60a
48
28
58
56
26
34
24
SOURCE
54
IMPRINT HEAD
36
348
60b
326
80
50
50
16
12
14
324
334
23
x
z
y

FIG. 27

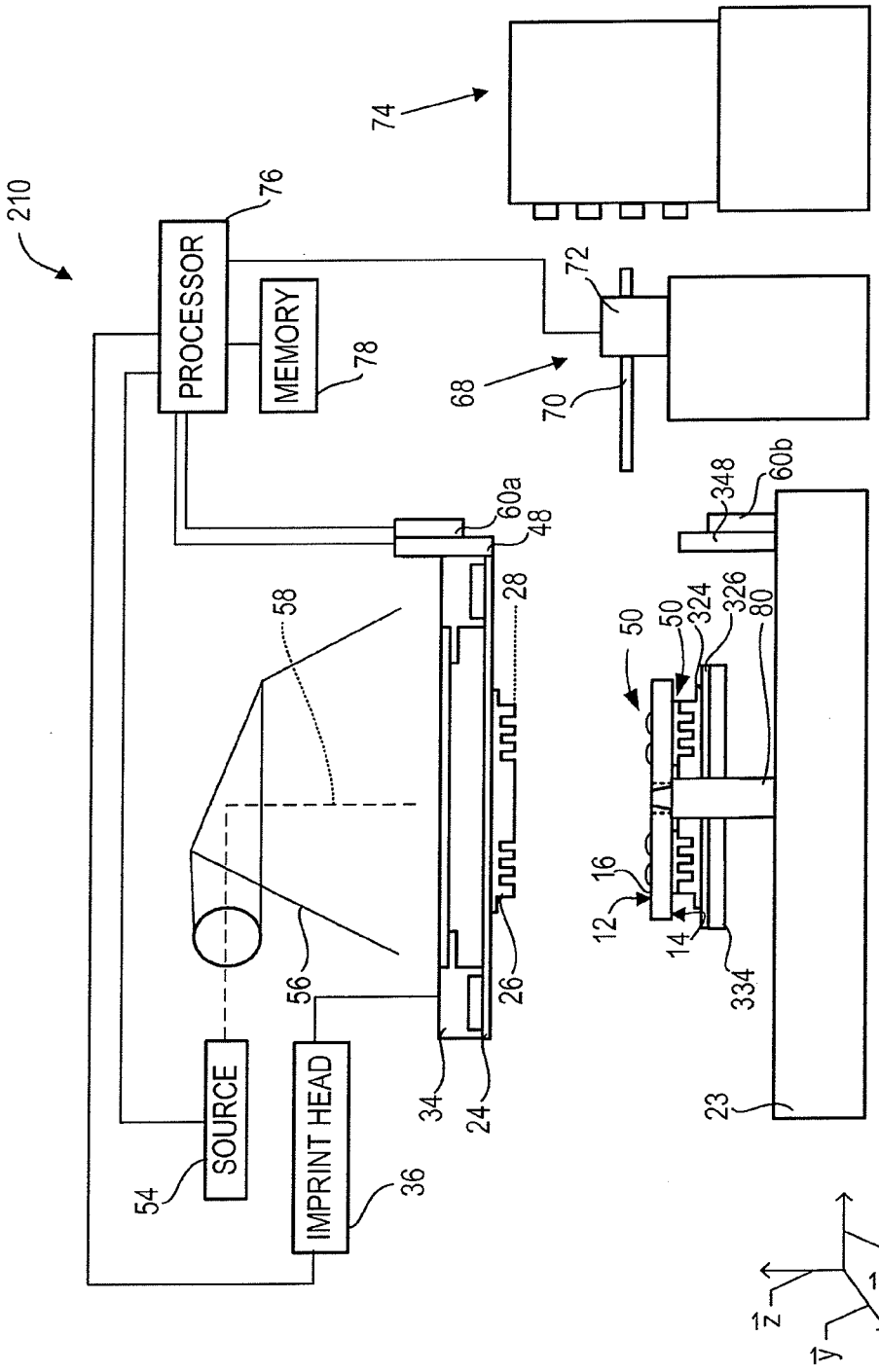
210
74
76
PROCESSOR
MEMORY
78
72
68
70
60a
48
28
58
56
26
34
24
SOURCE
54
IMPRINT HEAD
36
348
60b
50
324
326
80
16
12
14
334
23
x
z
y

FIG. 28

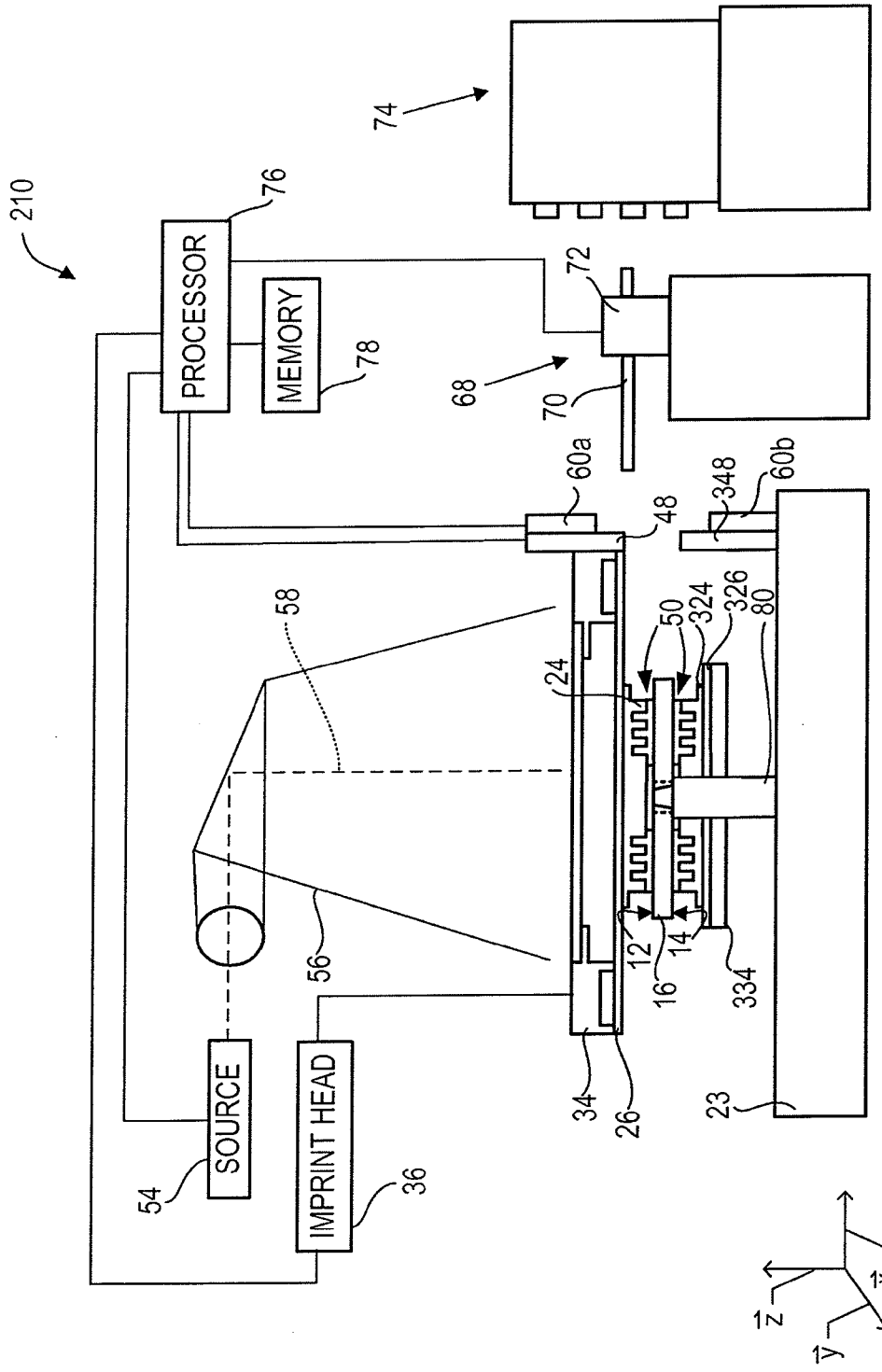
210
74
76
PROCESSOR
MEMORY
78
72
68
70
60a
348
60b
48
58
50
324
326
80
24
56
12
14
16
334
34
26
23
SOURCE
54
IMPRINT HEAD
36
x
z
y

FIG. 29

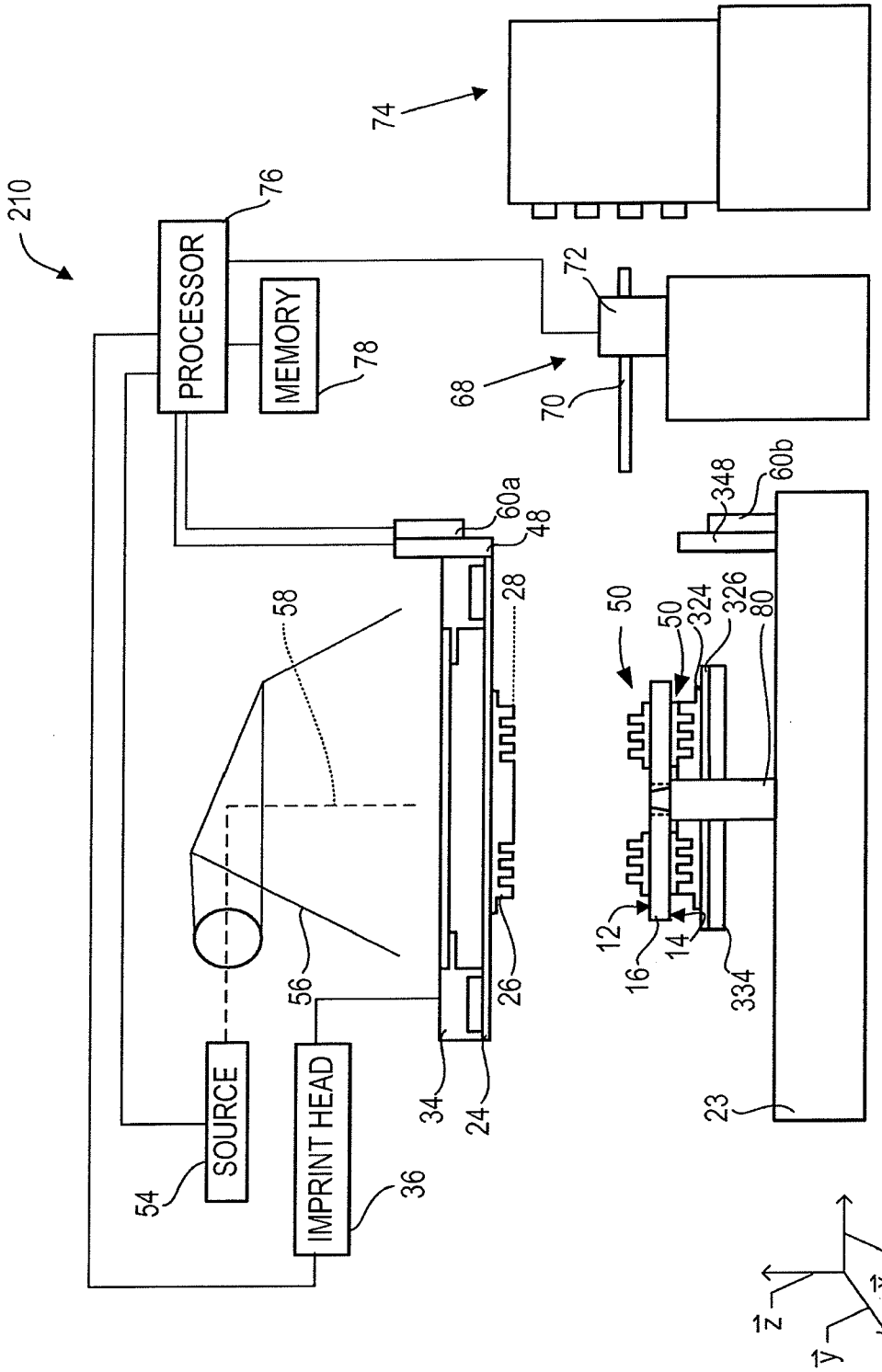
210
PROCESSOR
76
MEMORY
78
74
72
68
70
60a
48
28
58
56
26
34
24
SOURCE
54
IMPRINT HEAD
36
348
60b
50
324
326
80
12
16
14
334
23
x
z
y

FIG. 30

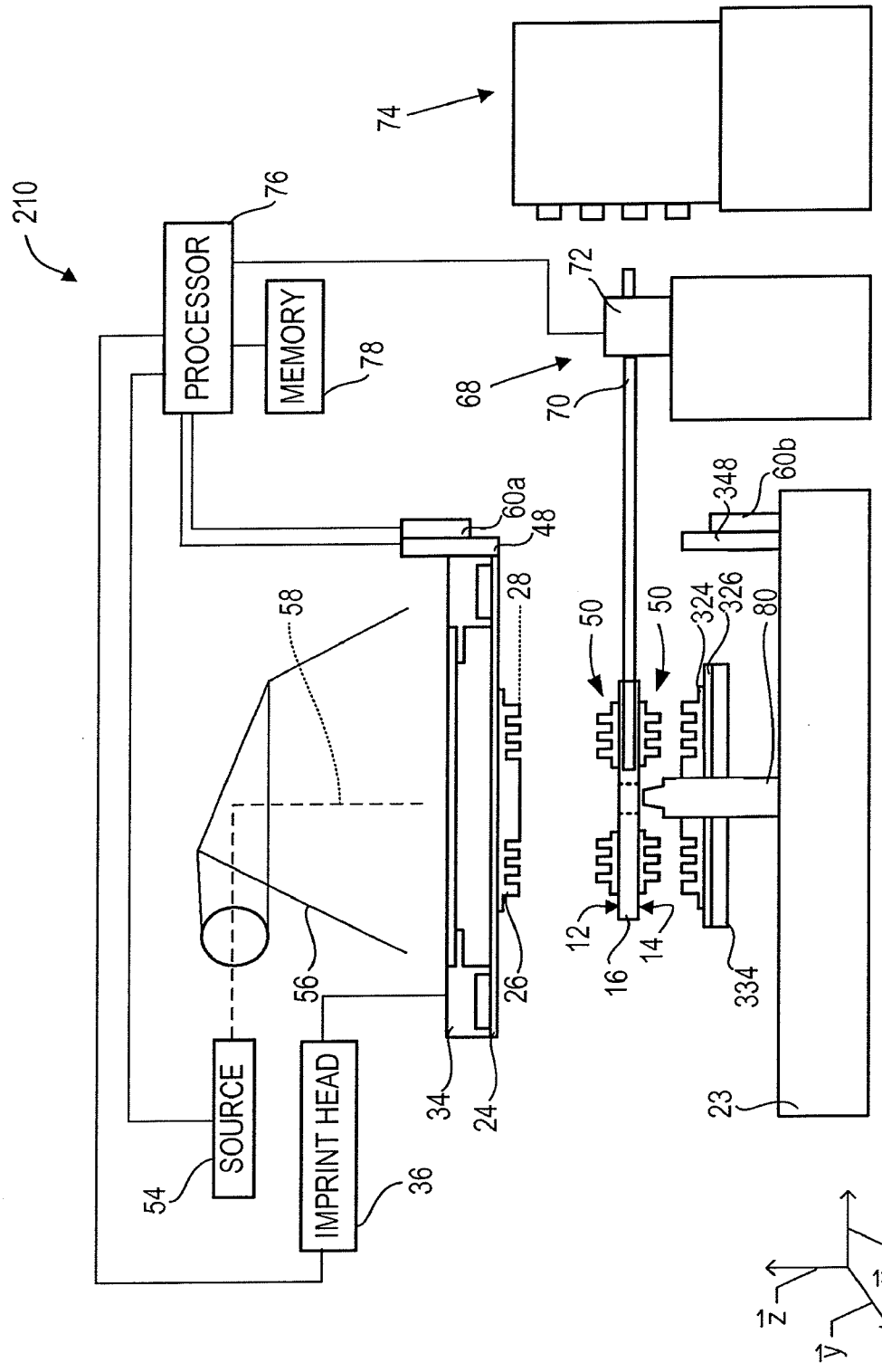
210
74
76
PROCESSOR
MEMORY
78
72
68
70
60a
48
28
58
50
50
324
326
80
348
60b
12
16
14
334
56
26
34
24
23
SOURCE
IMPRINT HEAD
54
36
$\vec{z}$
$\vec{x}$
$\vec{y}$

FIG. 31