FIG. 1

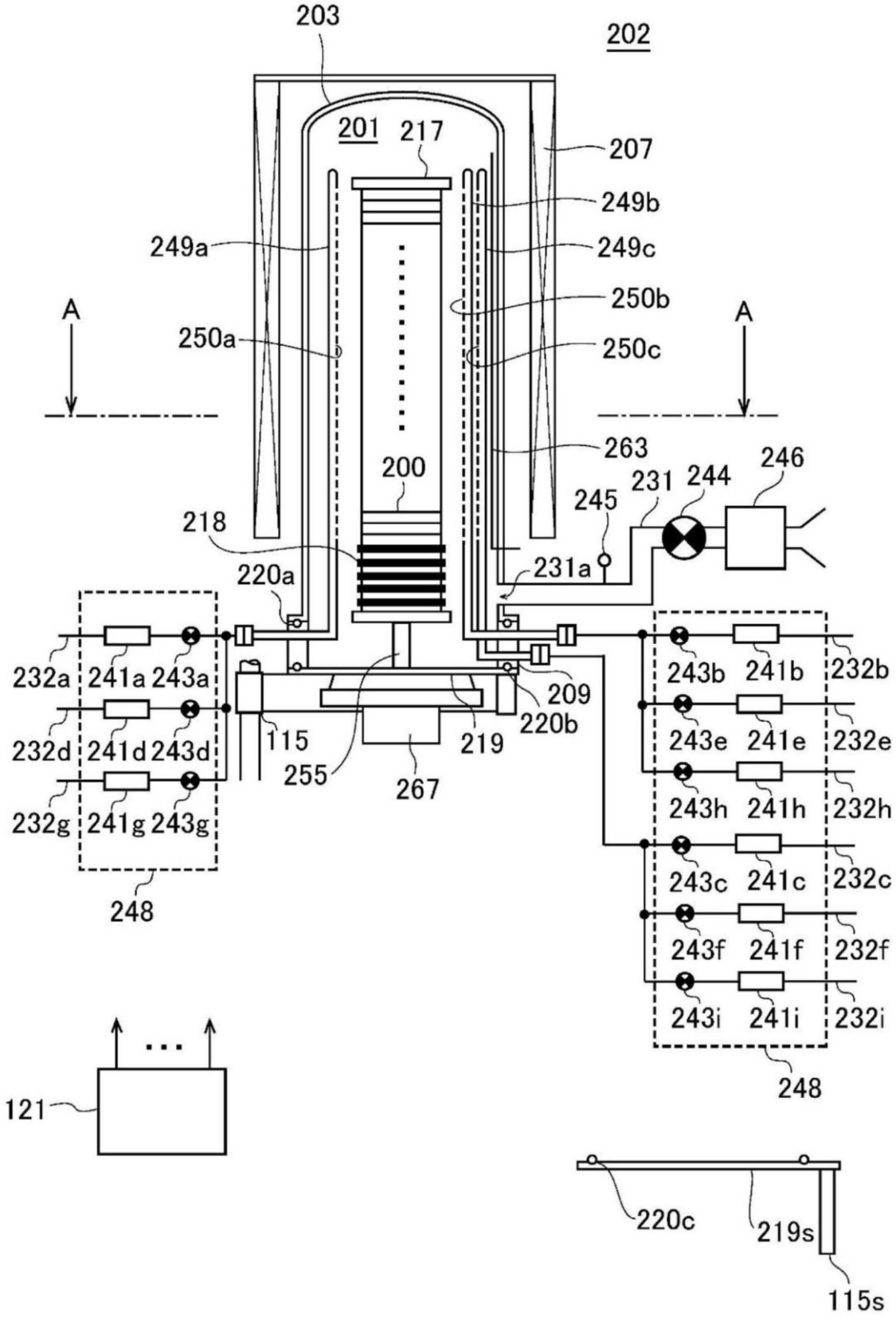
203
202
201
217
207
249b
249a
249c
250b
A
A
250a
250c
263
200
246
231
244
245
218
231a
220a
232a
241a
243a
243b
241b
232b
209
220b
232d
241d
243d
115
219
243e
241e
232e
255
267
243h
241h
232h
232g
241g
243g
243c
241c
232c
248
243f
241f
232f
243i
241i
232i
248
121
220c
219s
115s

FIG. 2

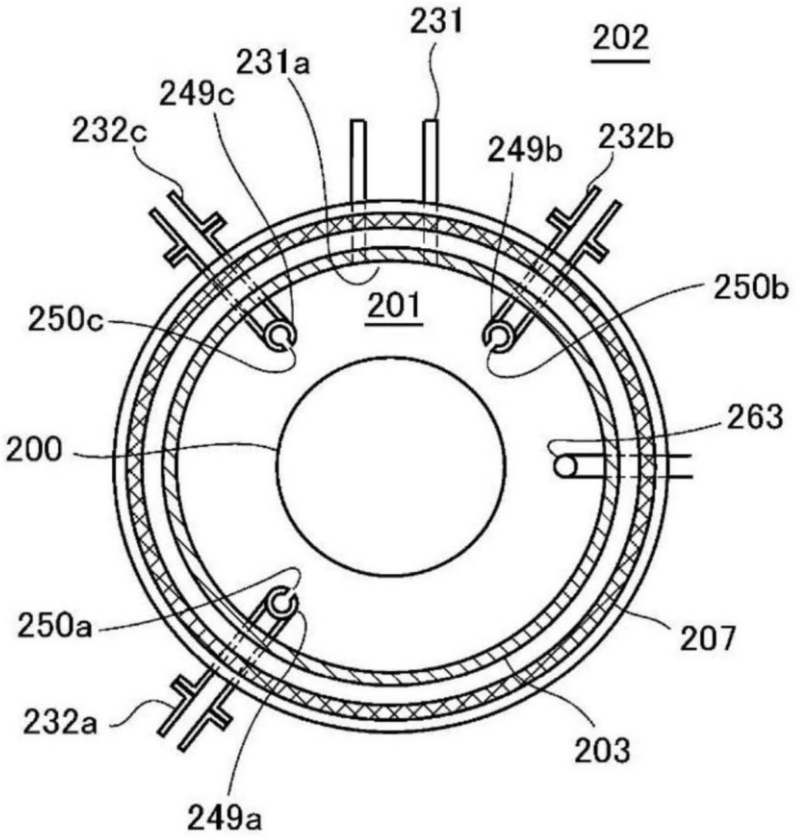
231
202
231a
249c
232c
249b
232b
250b
201
250c
263
200
250a
207
232a
203
249a

FIG. 3

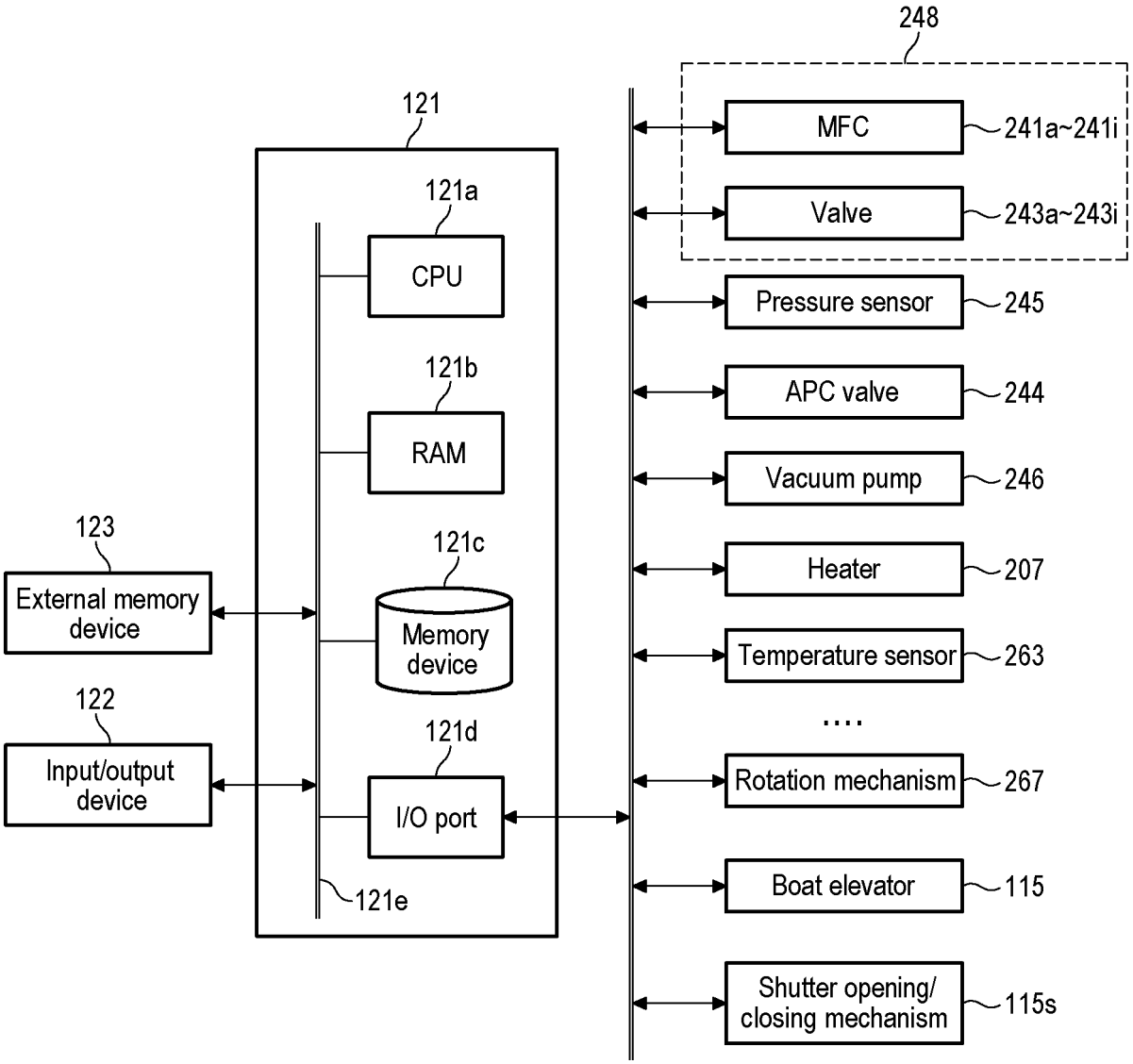
248
121
121a
CPU
121b
RAM
121c
Memory device
121d
I/O port
121e
123
External memory device
122
Input/output device
MFC
241a~241i
Valve
243a~243i
Pressure sensor
245
APC valve
244
Vacuum pump
246
Heater
207
Temperature sensor
263
....
Rotation mechanism
267
Boat elevator
115
Shutter opening/ closing mechanism
115s

FIG. 4

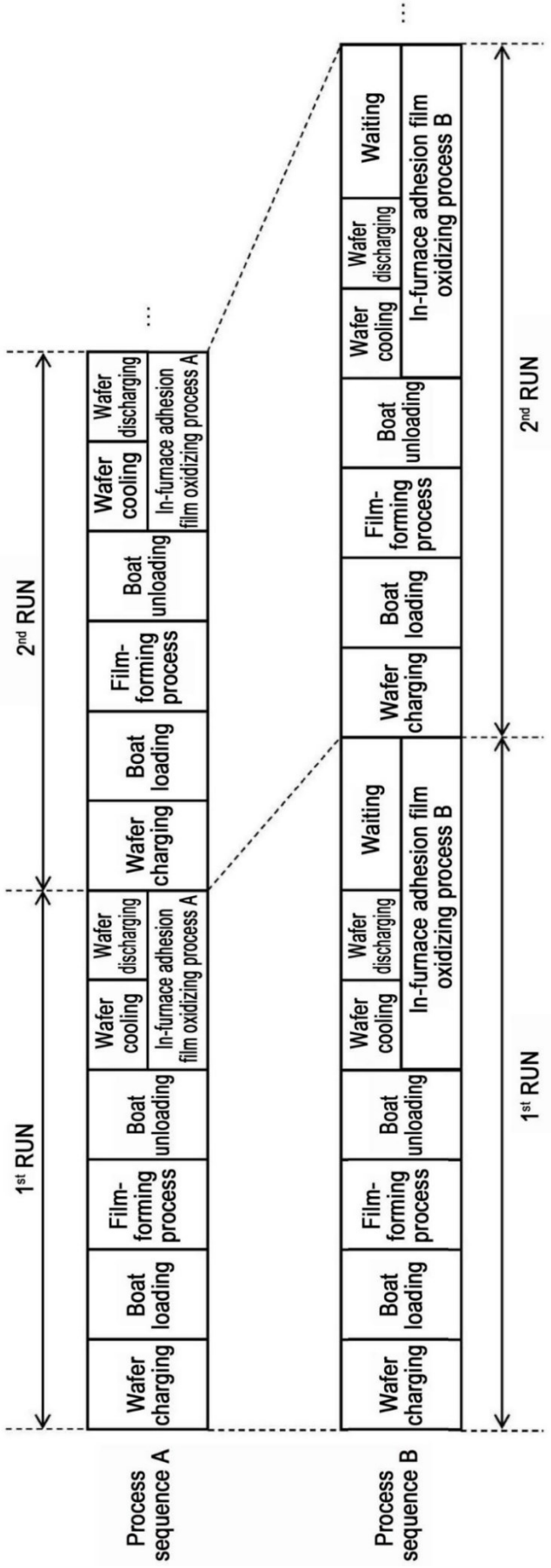
Process sequence A
Process sequence B
1st RUN
2nd RUN
Wafer charging
Boat loading
Film-forming process
Boat unloading
Wafer cooling
Wafer discharging
In-furnace adhesion film oxidizing process A
Waiting
In-furnace adhesion film oxidizing process B
...

FIG. 5

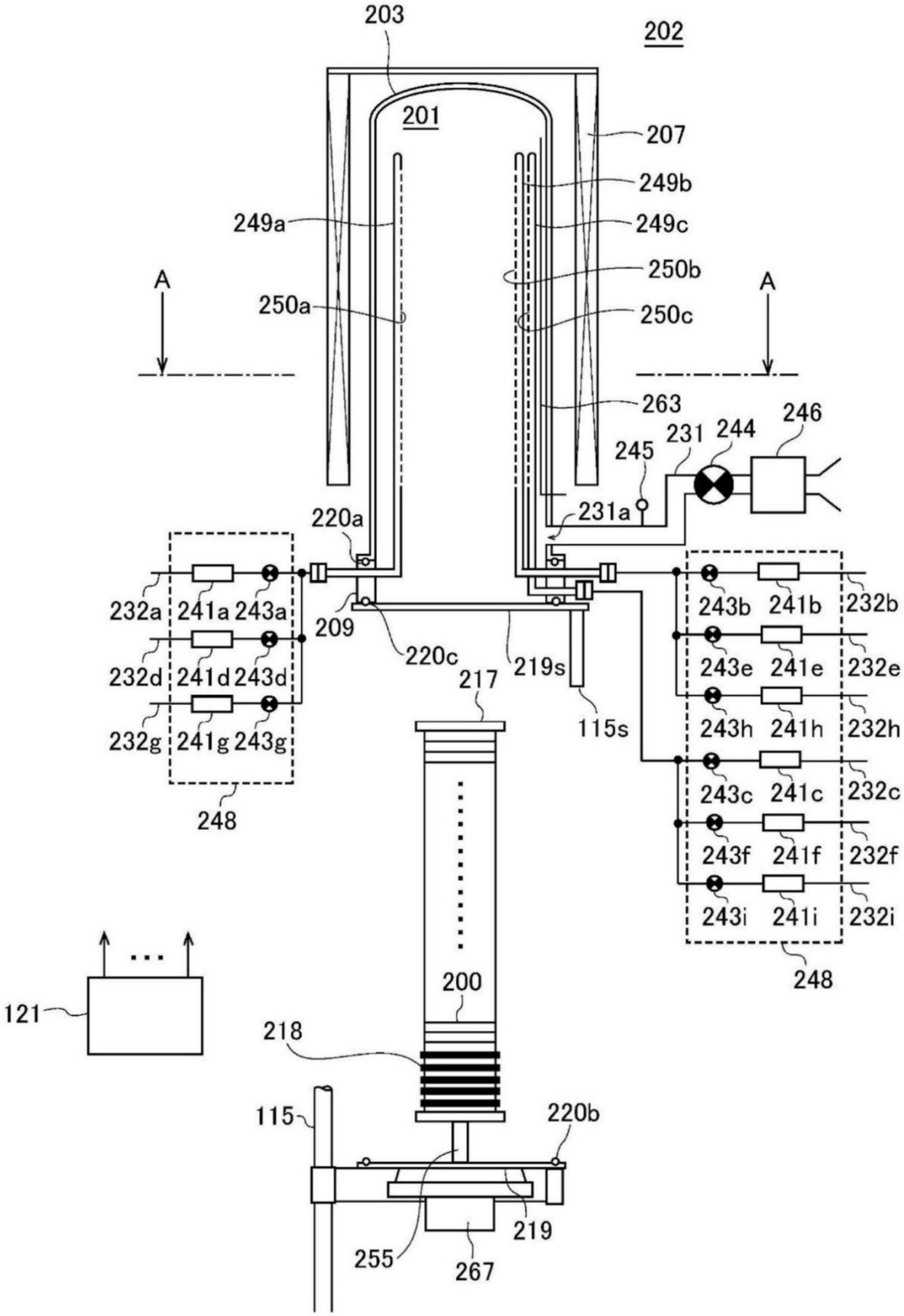
203
202
201
207
249b
249a
249c
250b
A
250a
250c
A
263
246
231
244
245
231a
220a
232a
241a
243a
209
220c
219s
217
243b
241b
232b
232d
241d
243d
243e
241e
232e
115s
232g
241g
243g
243h
241h
232h
243c
241c
232c
243f
241f
232f
243i
241i
232i
248
248
121
200
218
115
220b
219
255
267

FIG. 6

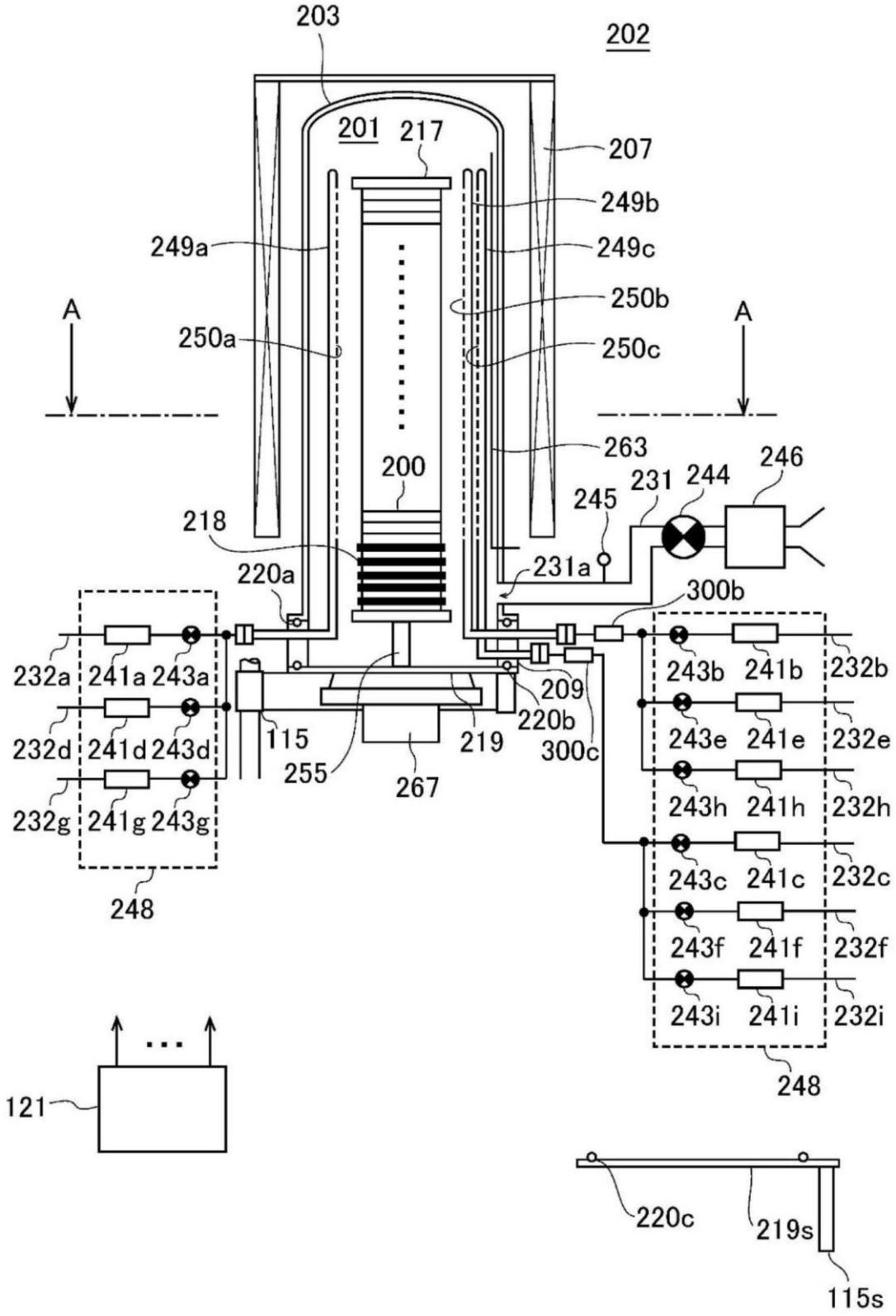
203
202
201
217
207
249b
249a
249c
250b
250a
250c
A
A
263
200
246
231
244
245
218
231a
220a
300b
232a
241a
243a
243b
241b
232b
209
232d
241d
243d
220b
243e
241e
232e
115
219
300c
255
267
243h
241h
232h
232g
241g
243g
243c
241c
232c
243f
241f
232f
243i
241i
232i
248
248
121
220c
219s
115s

FIG. 7

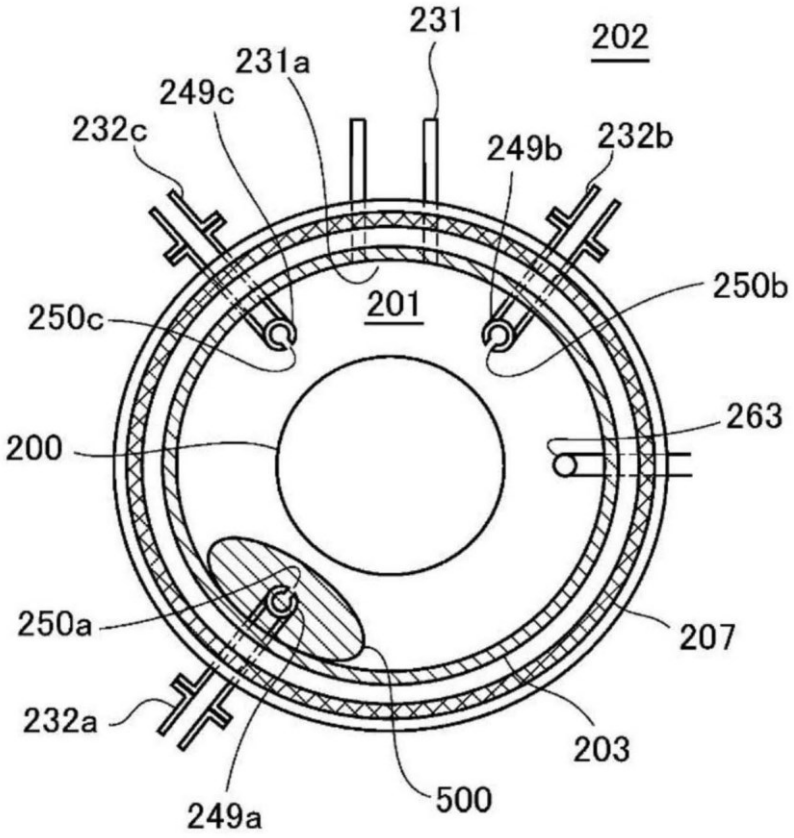
231
202
231a
249c
232c
249b
232b
250b
201
250c
263
200
250a
207
232a
203
249a
500

FIG. 8

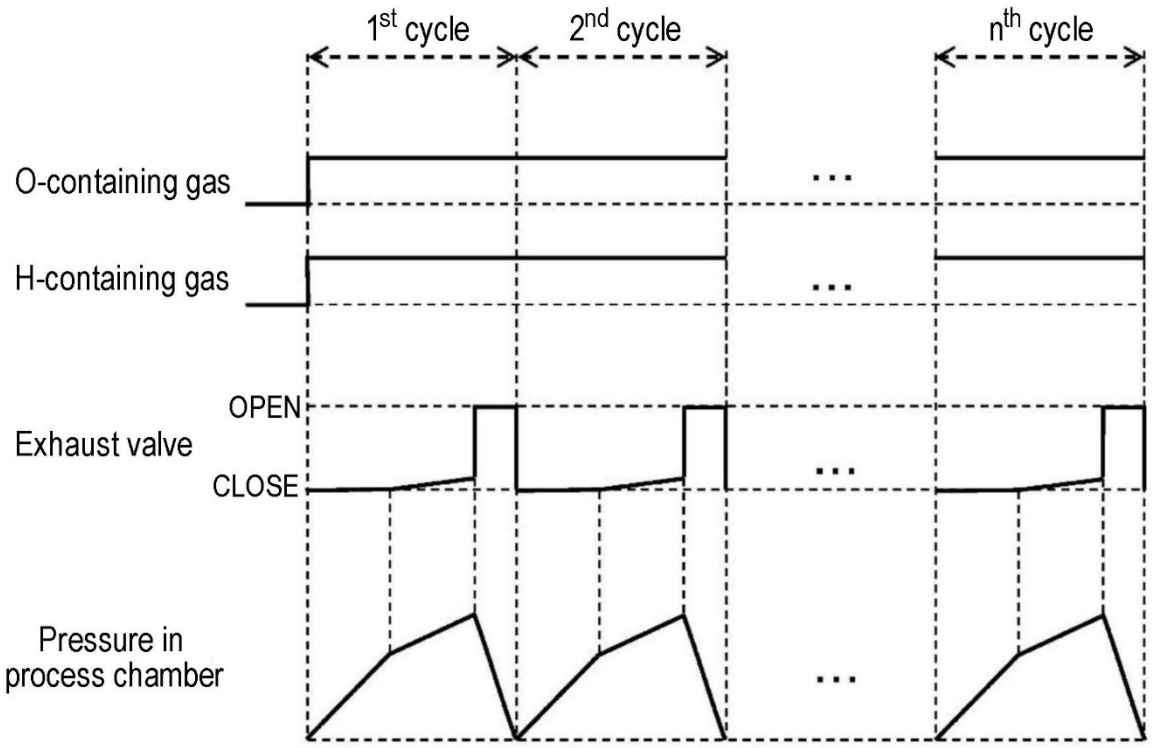
1st cycle
2nd cycle
nth cycle
O-containing gas
H-containing gas
OPEN
Exhaust valve
CLOSE
Pressure in process chamber