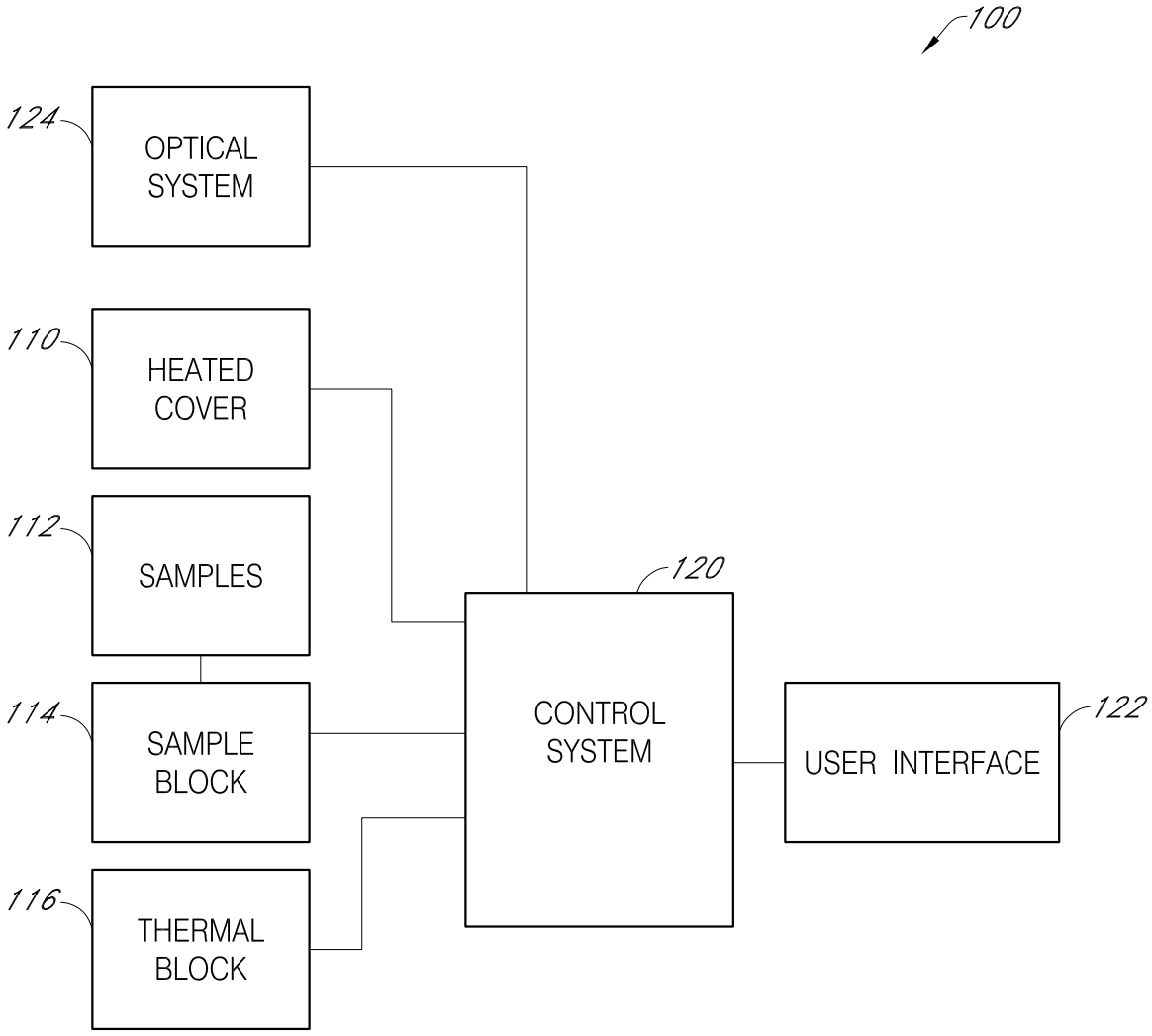
100
124
OPTICAL SYSTEM
110
HEATED COVER
112
SAMPLES
114
SAMPLE BLOCK
116
THERMAL BLOCK
120
CONTROL SYSTEM
122
USER INTERFACE

FIG. 1

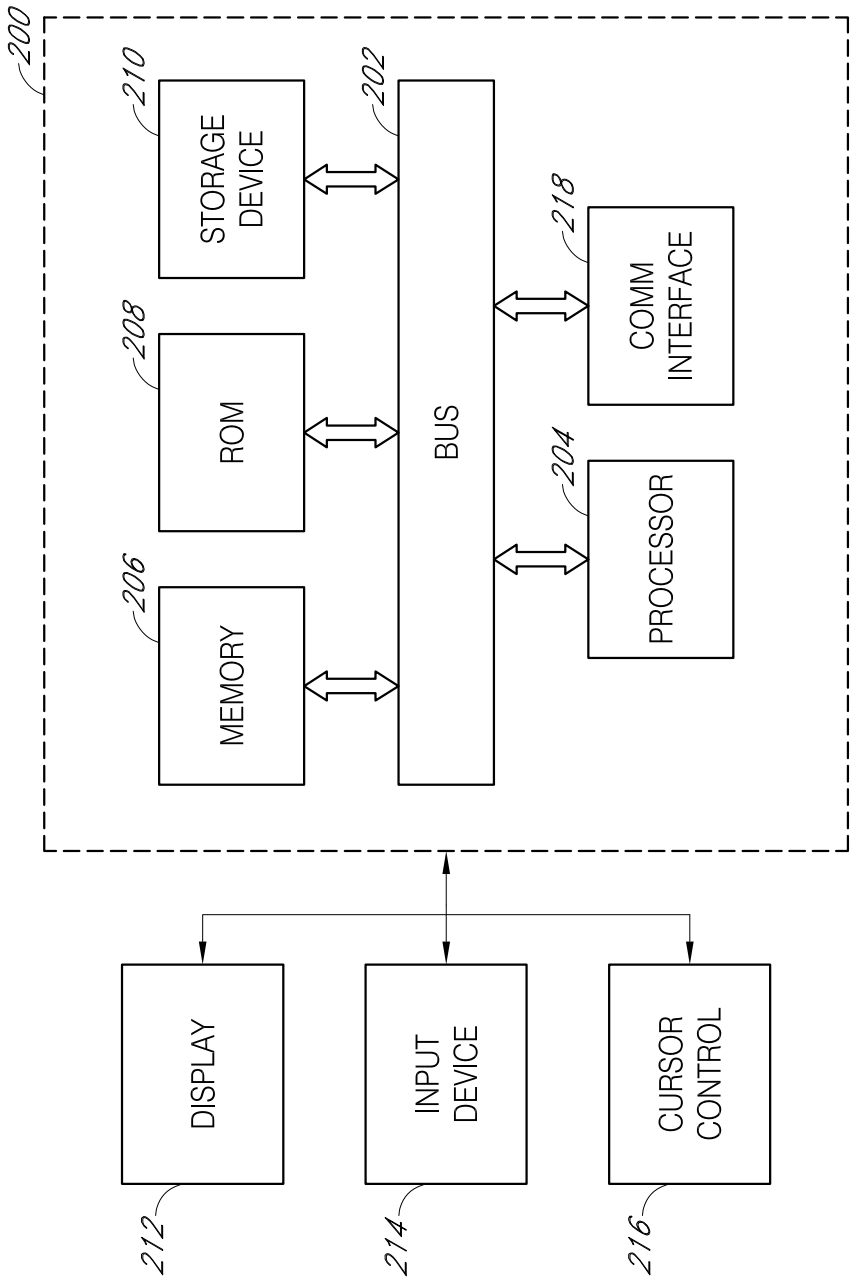
200
210
STORAGE DEVICE
202
218
COMM INTERFACE
208
ROM
BUS
204
PROCESSOR
206
MEMORY
DISPLAY
INPUT DEVICE
CURSOR CONTROL
212
214
216

FIG. 2

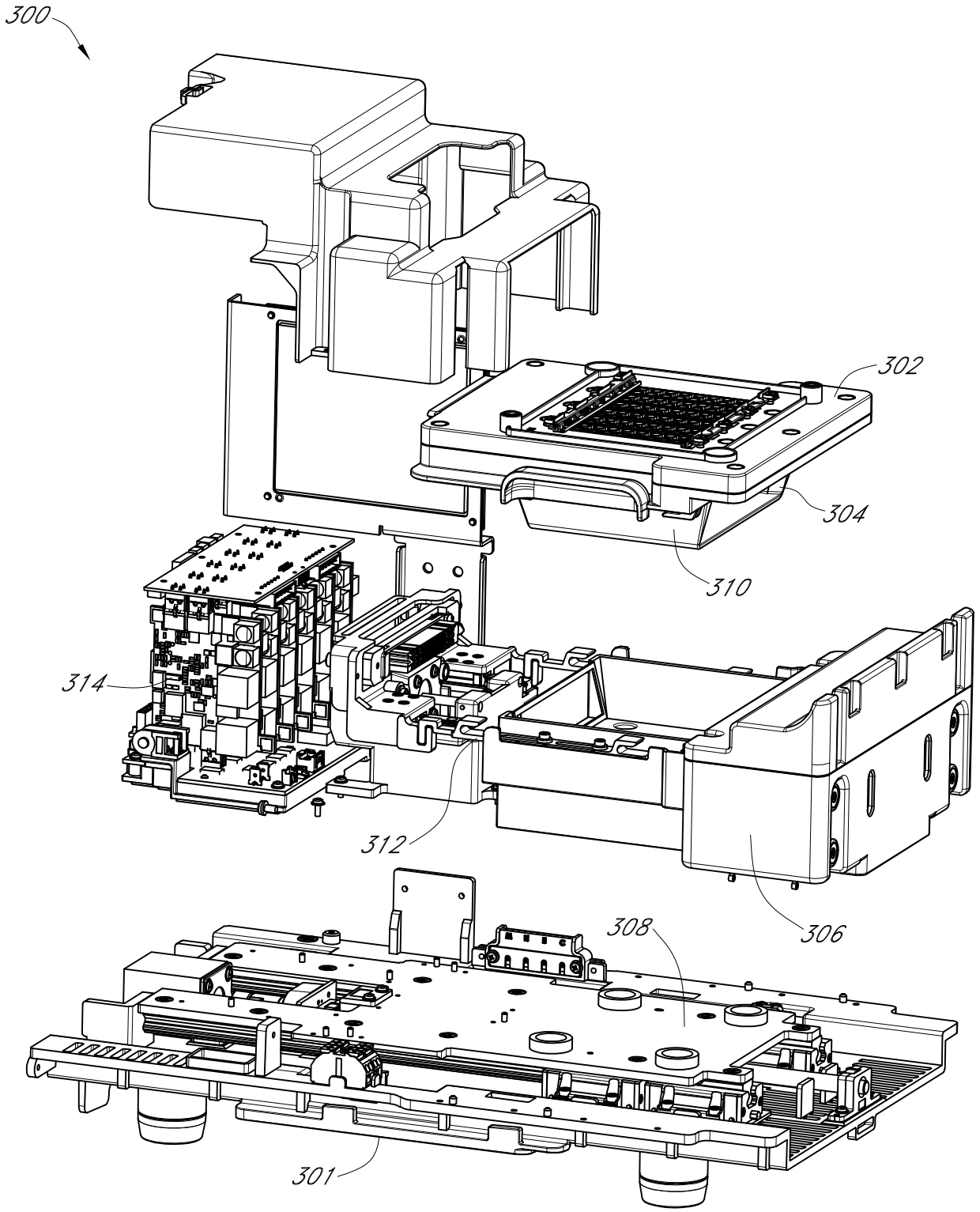

FIG. 3A

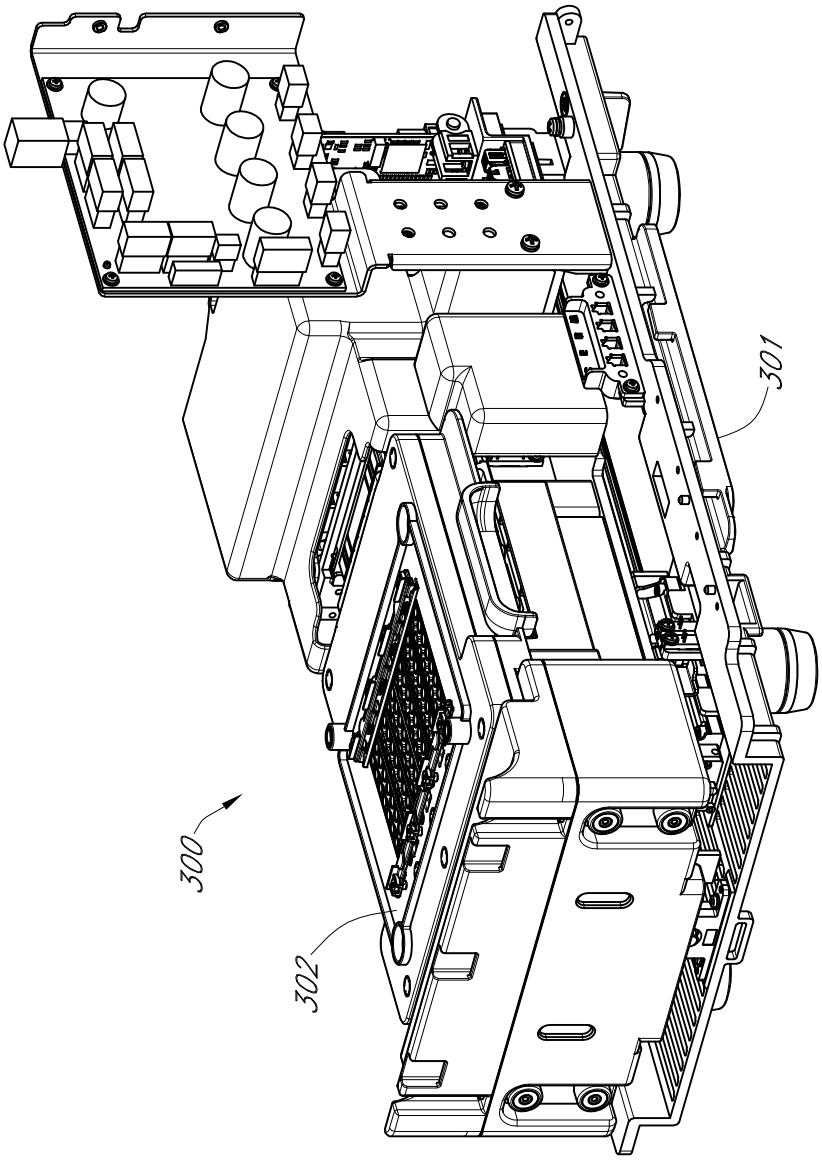

FIG. 3B

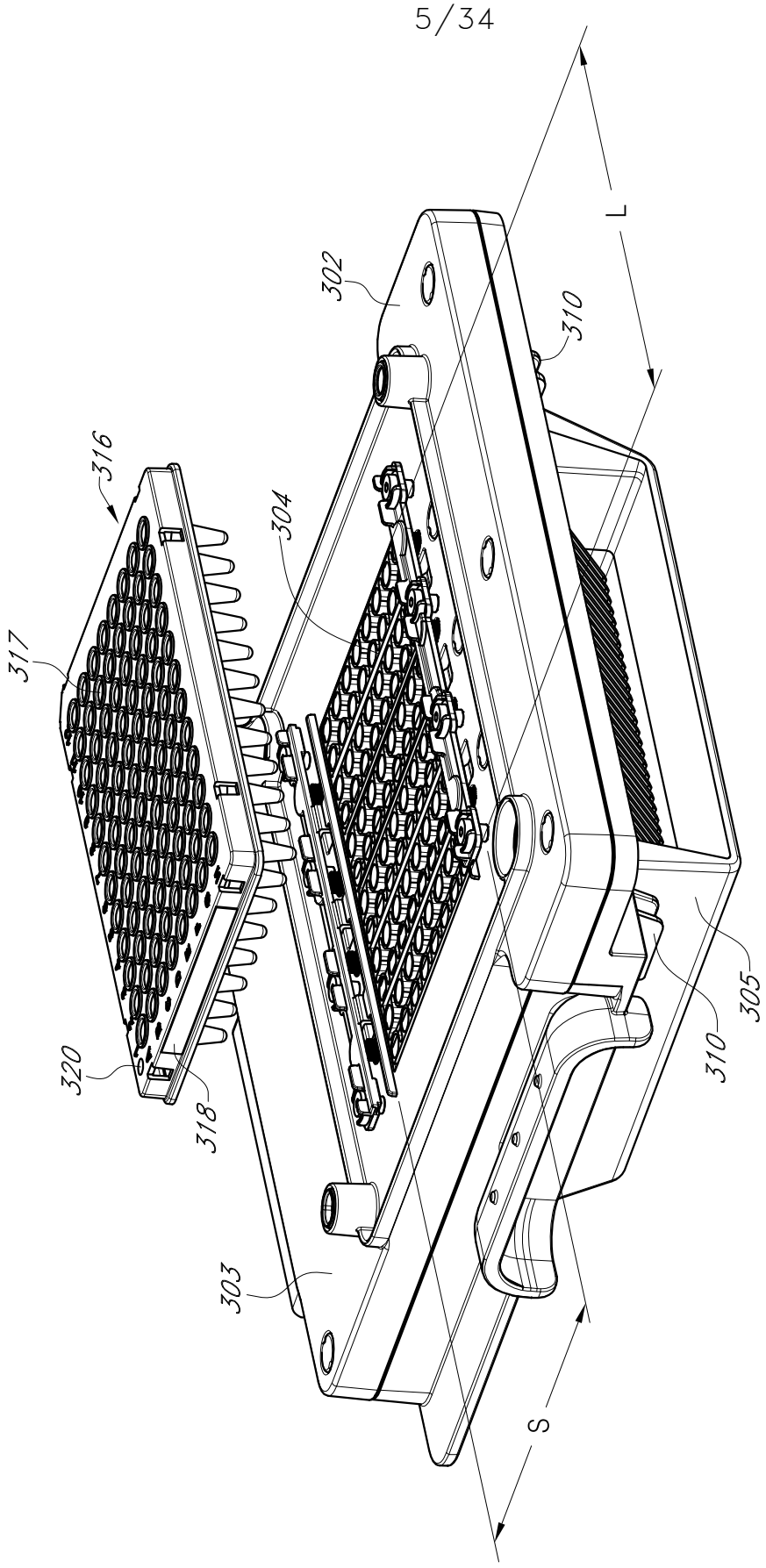

FIG. 3C

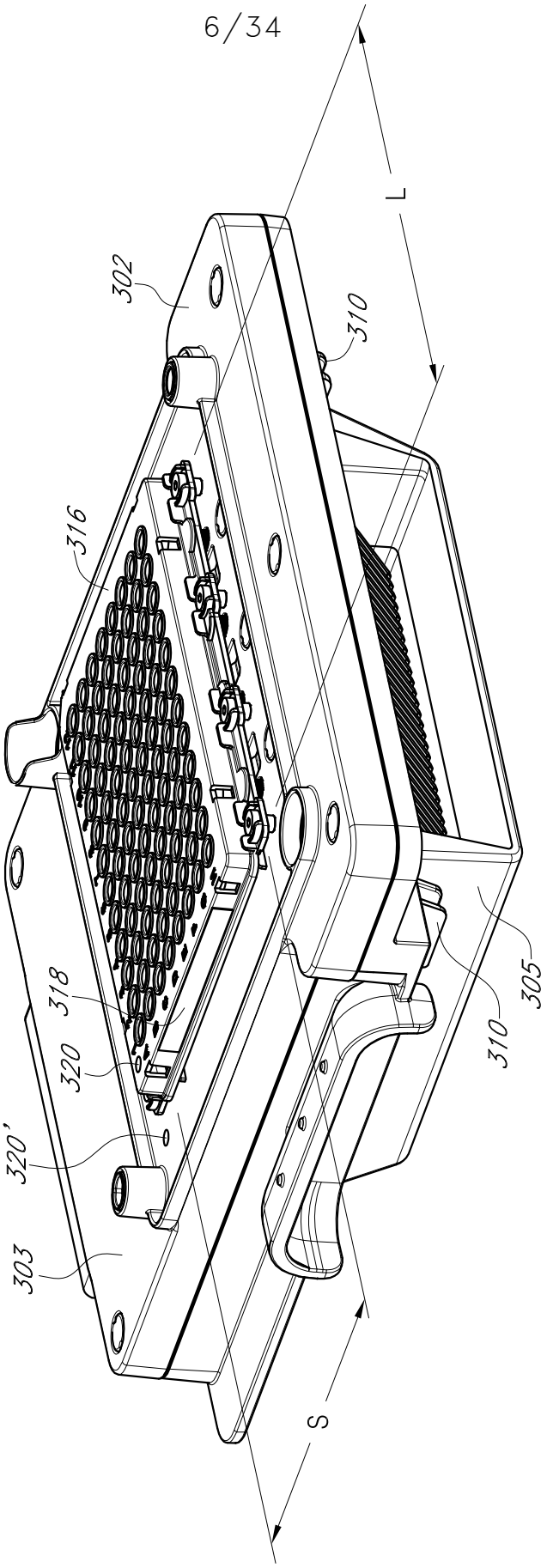

FIG. 3D

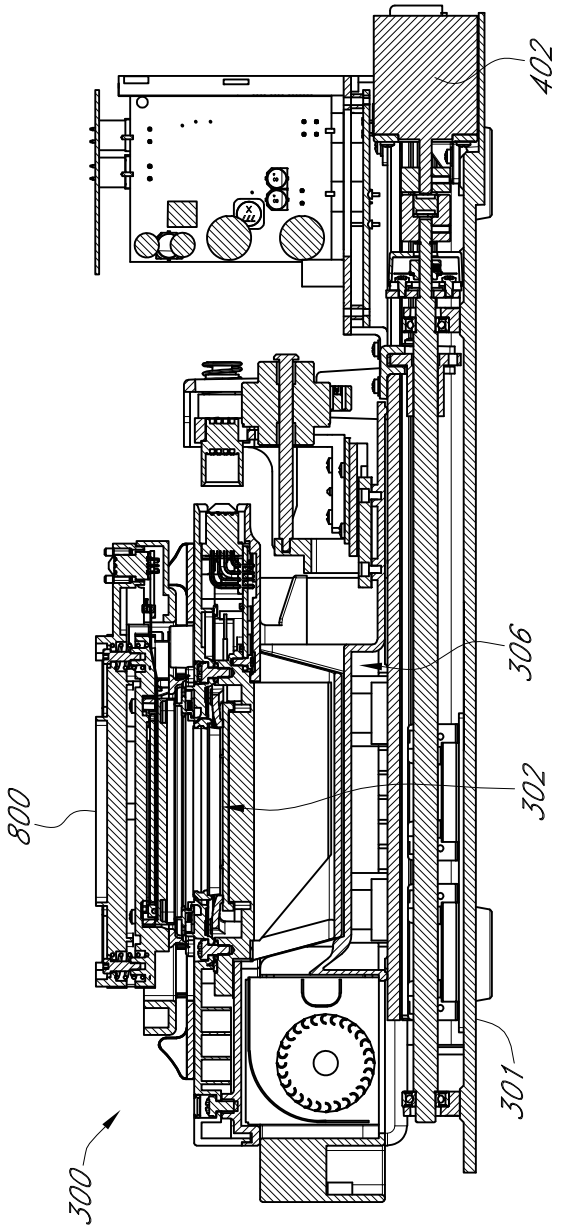

FIG. 4A

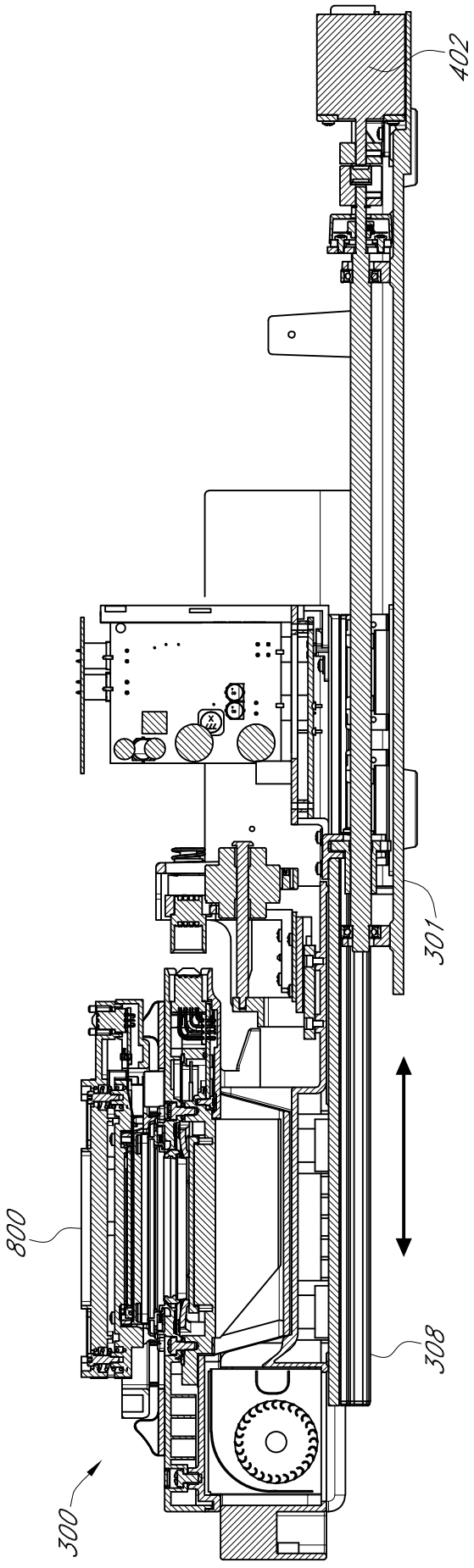

FIG. 4B

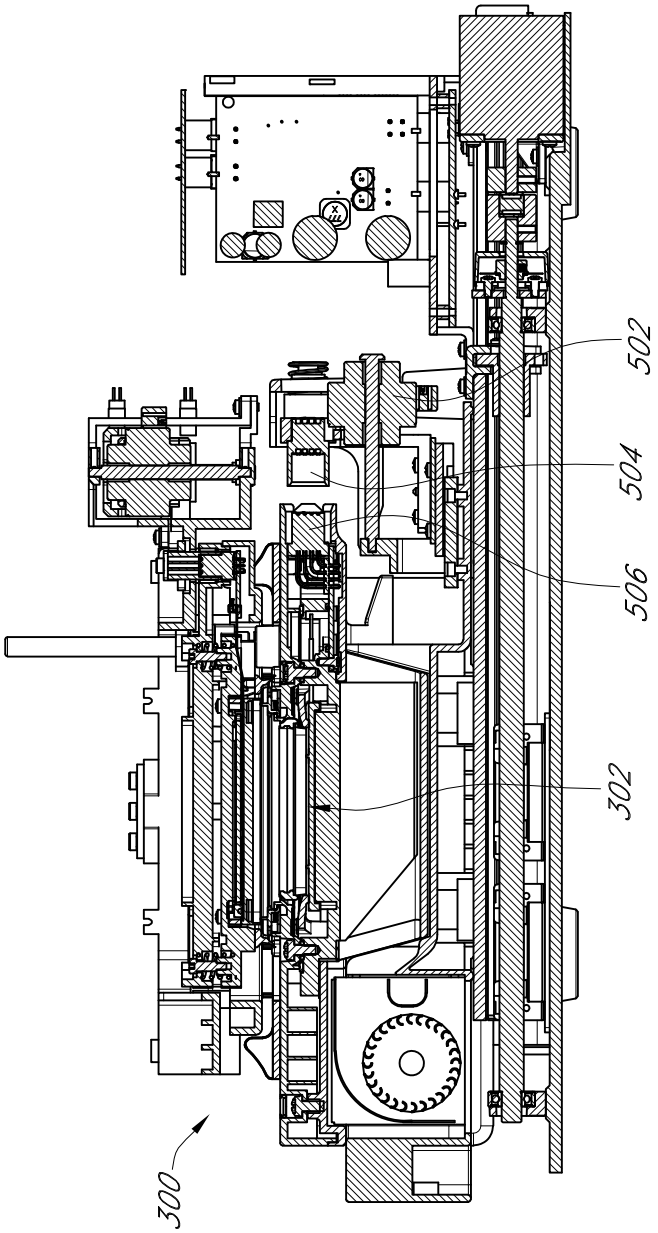

FIG. 5A

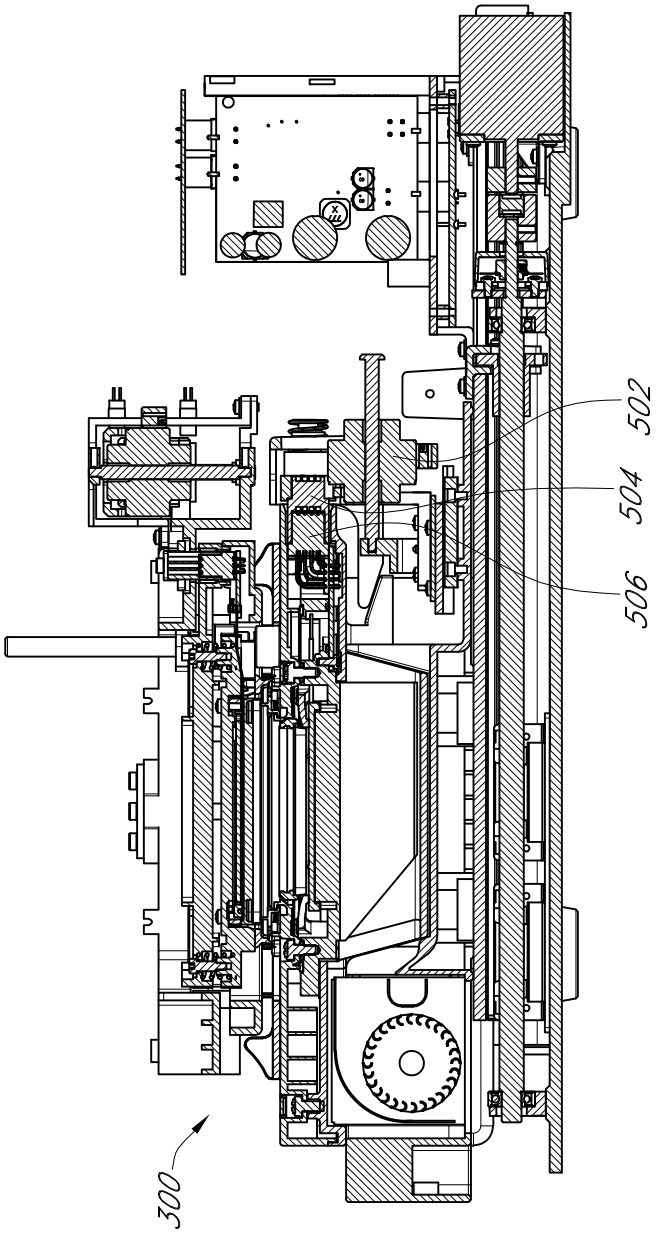

FIG. 5B

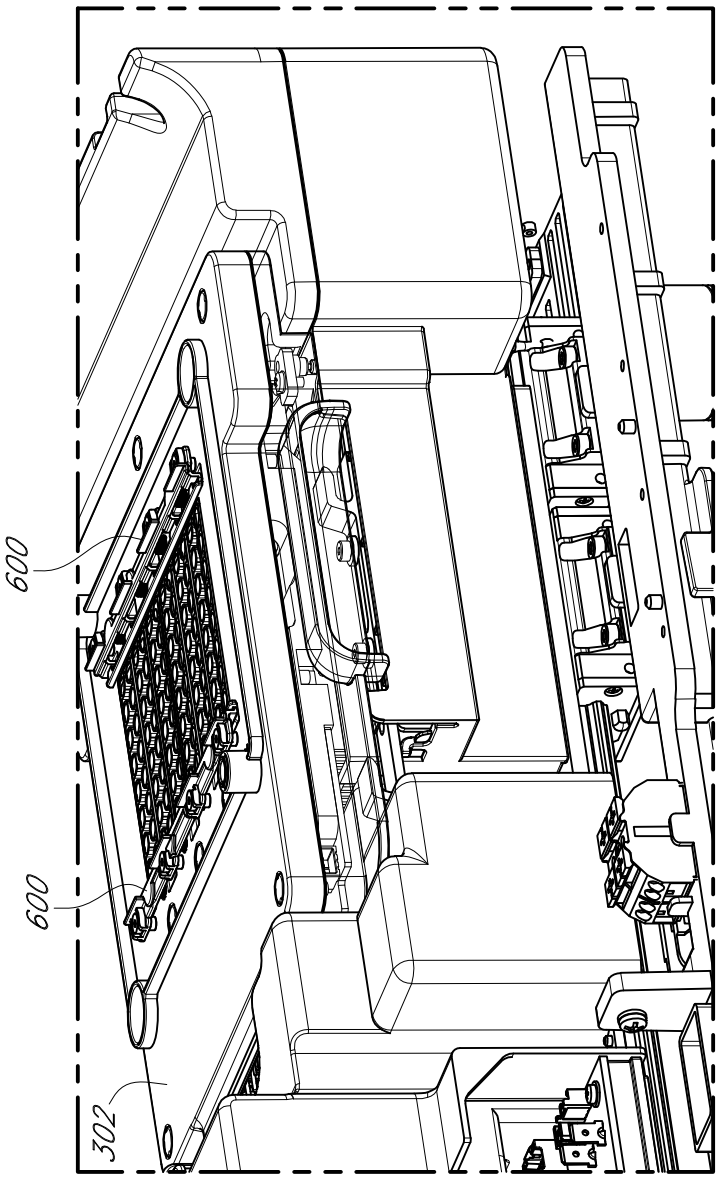

FIG. 6A

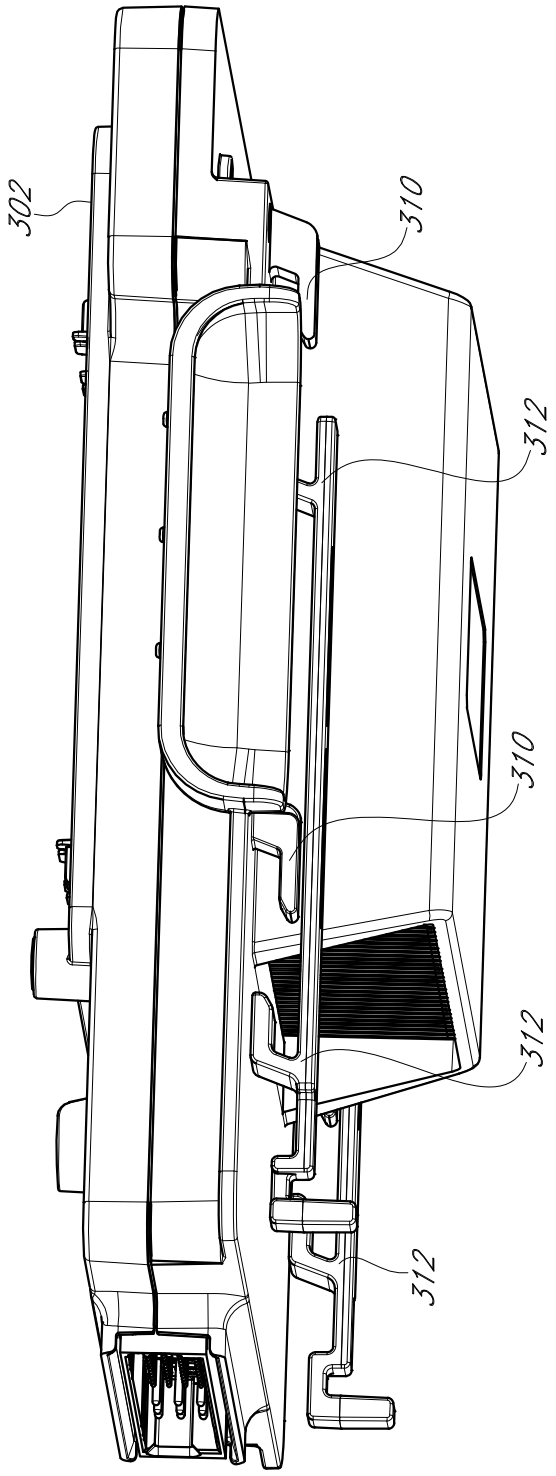

FIG. 6B

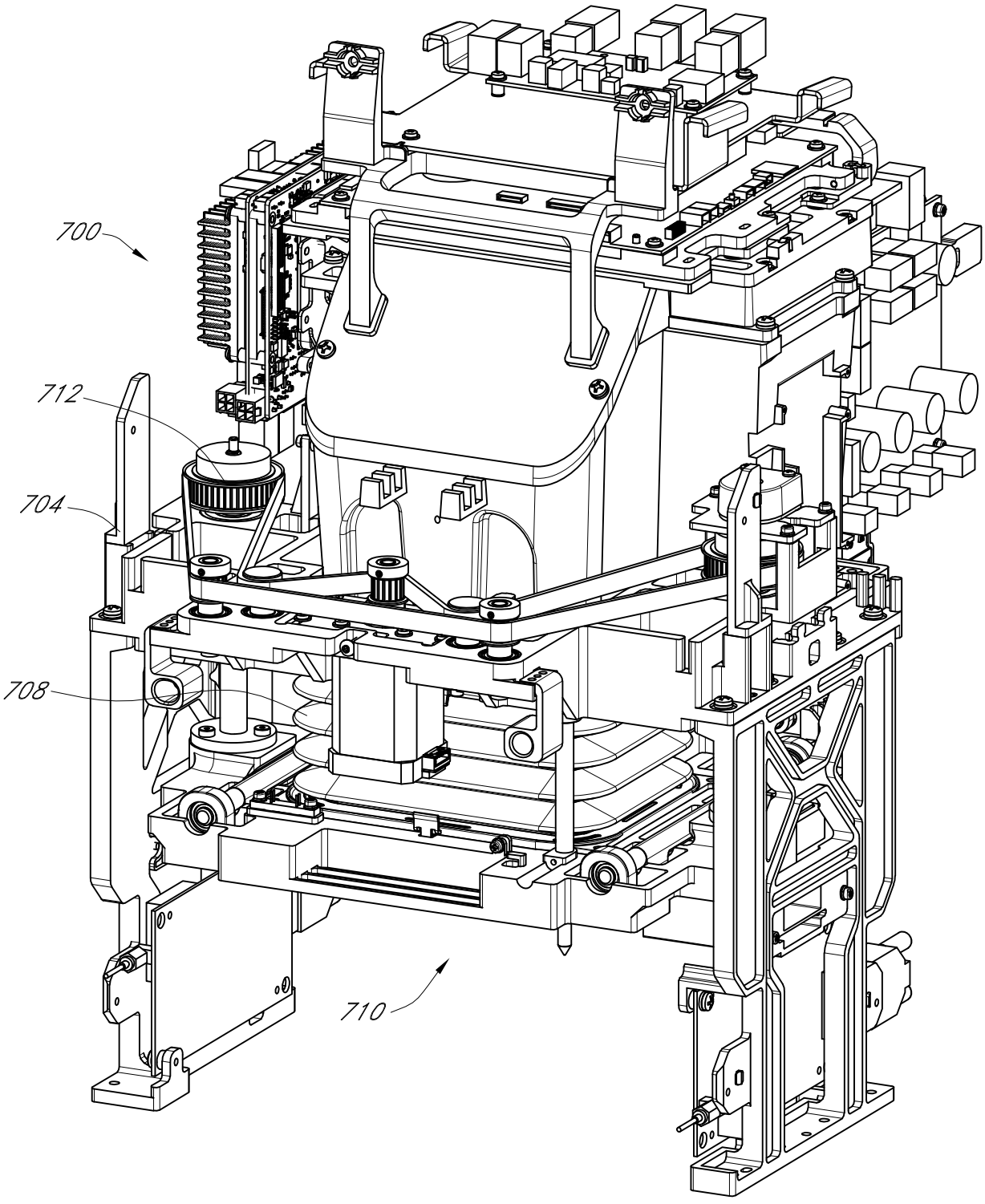

FIG. 7

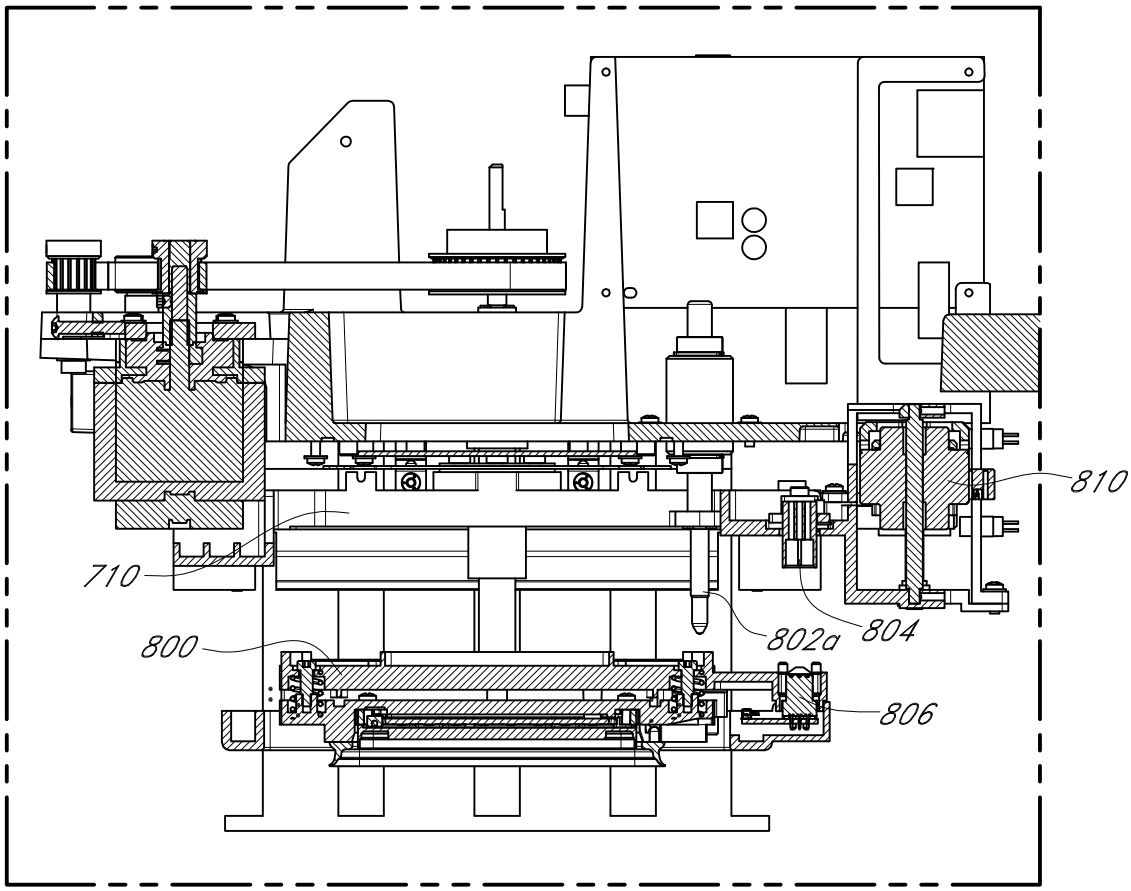

FIG. 8A

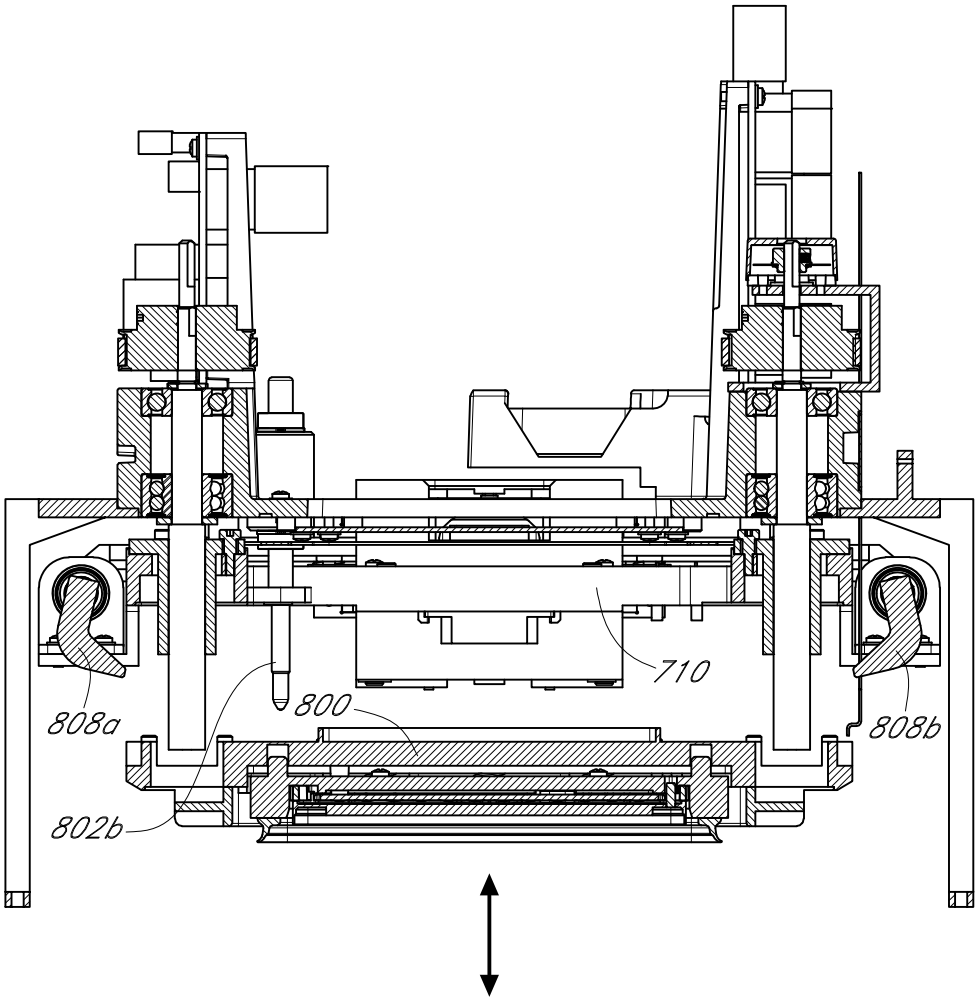

FIG. 8B

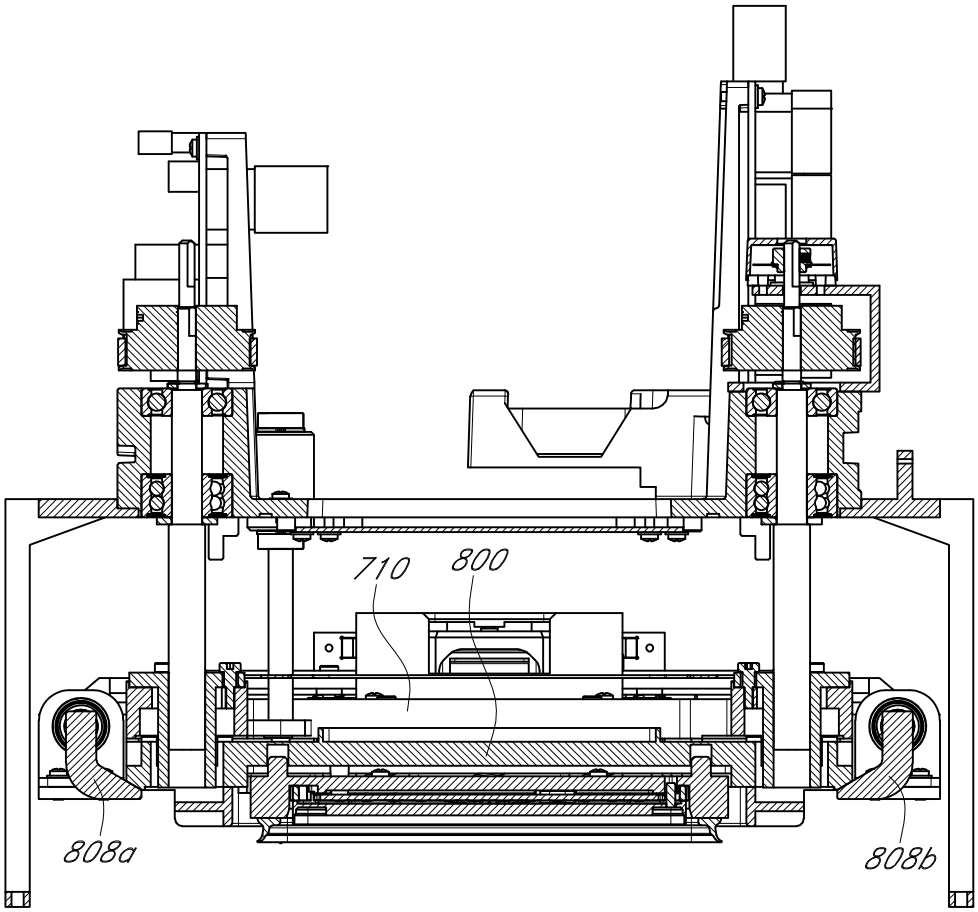

FIG. 8C

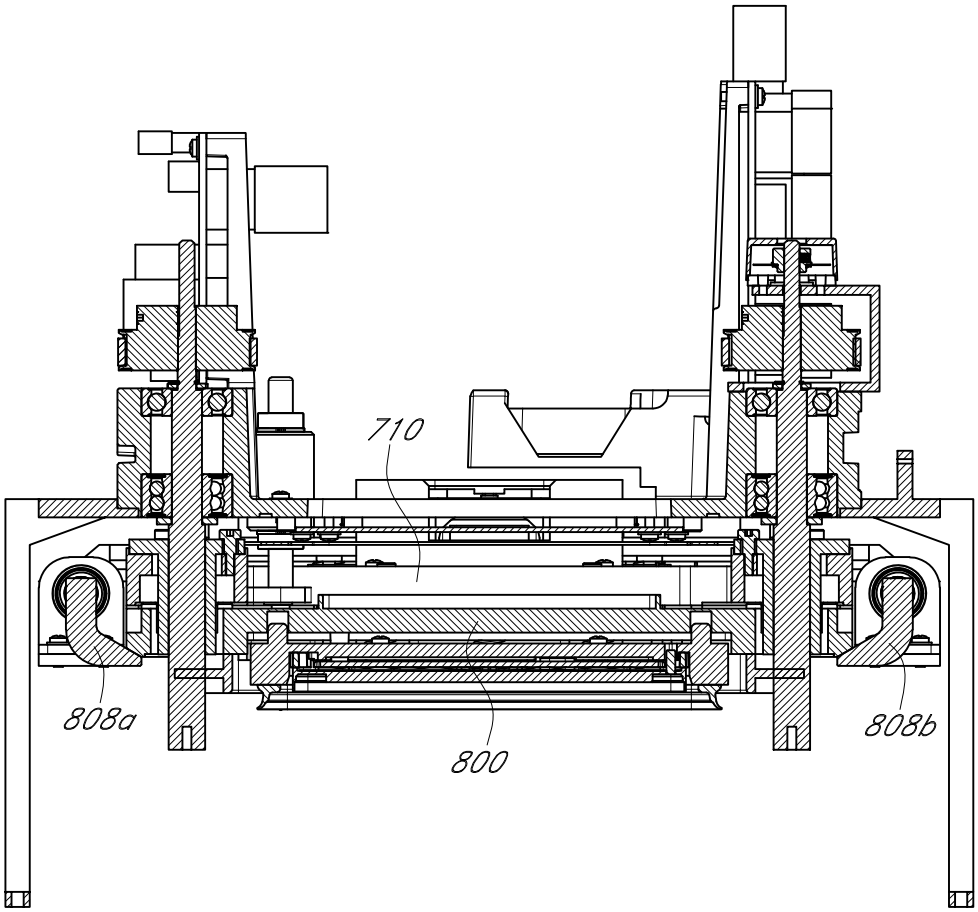

FIG. 8D

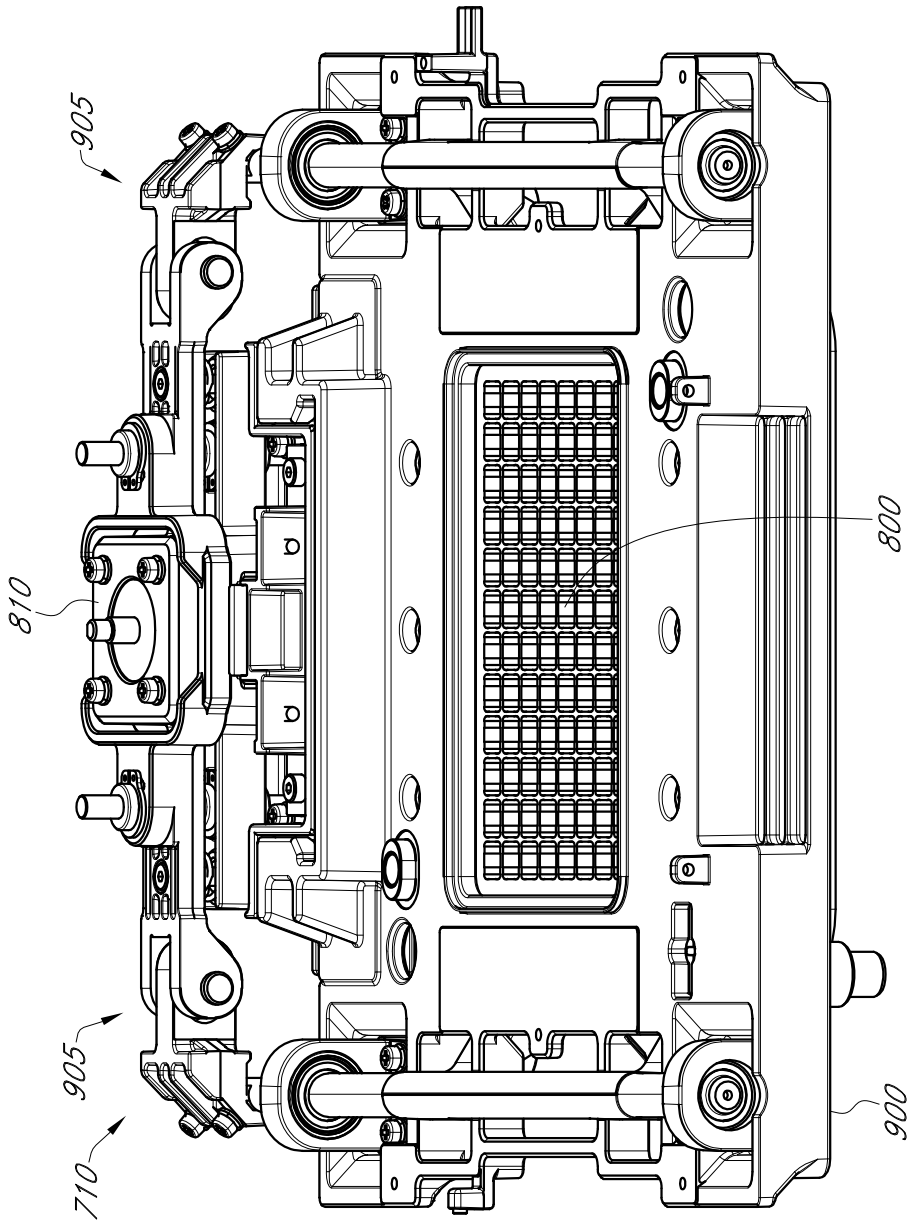

FIG. 9A

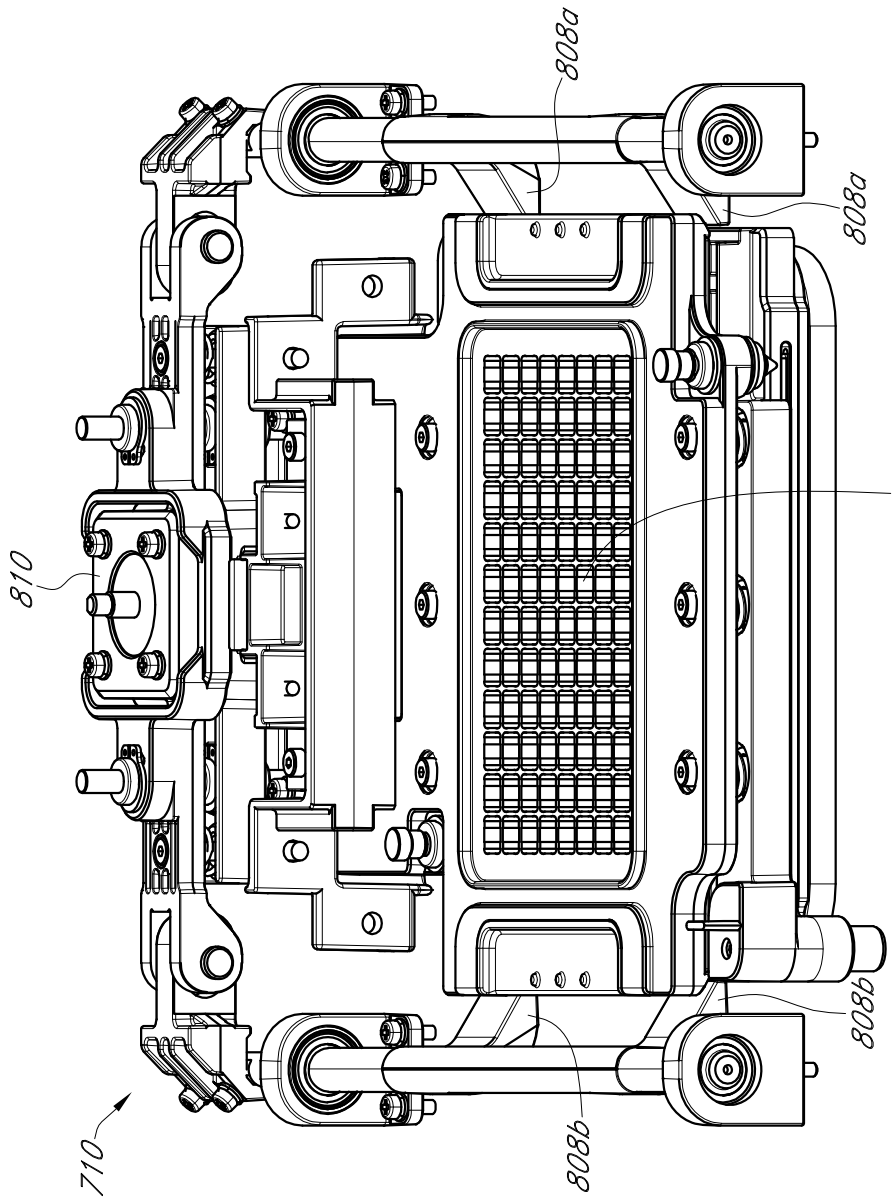

FIG. 9B

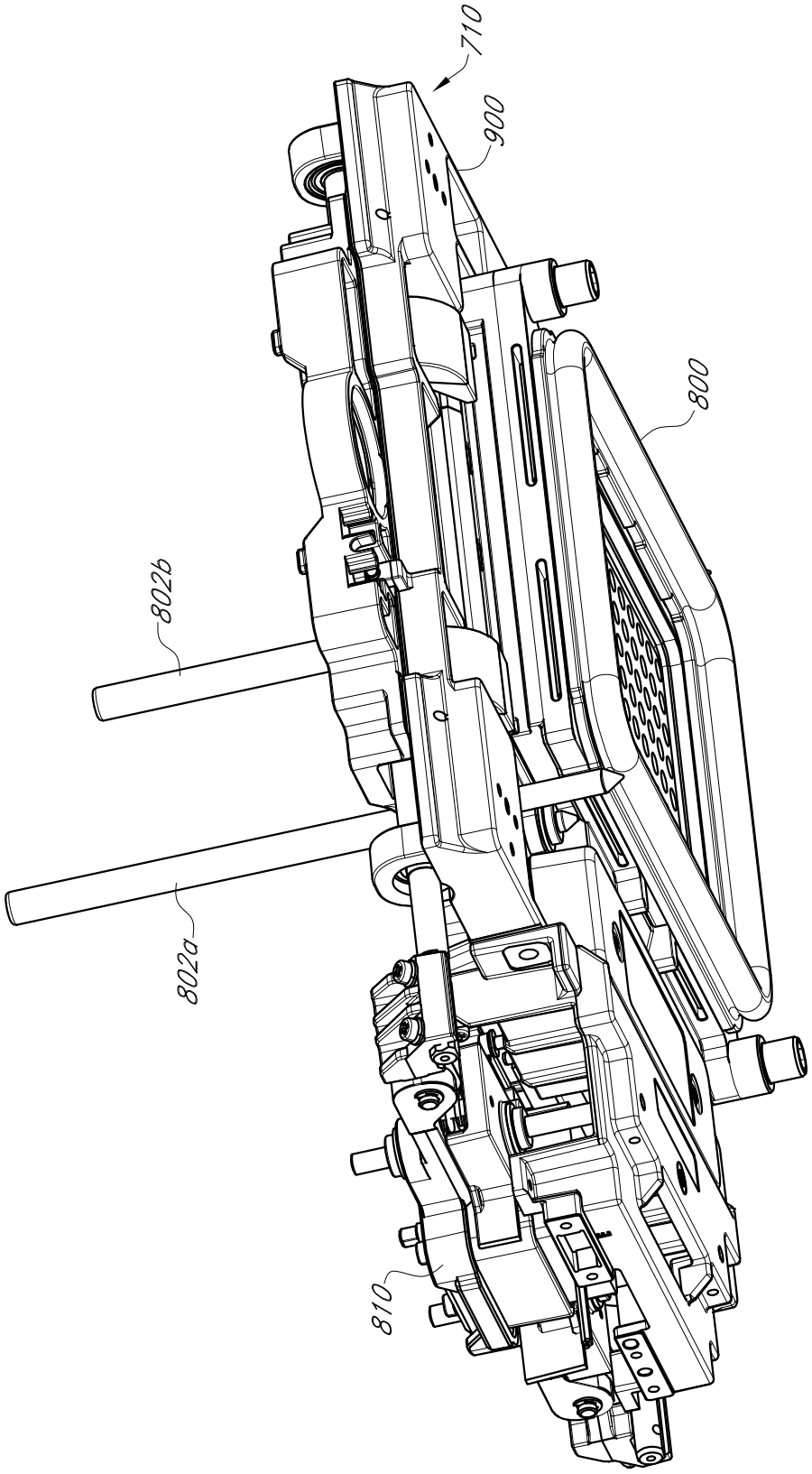

FIG. 9C

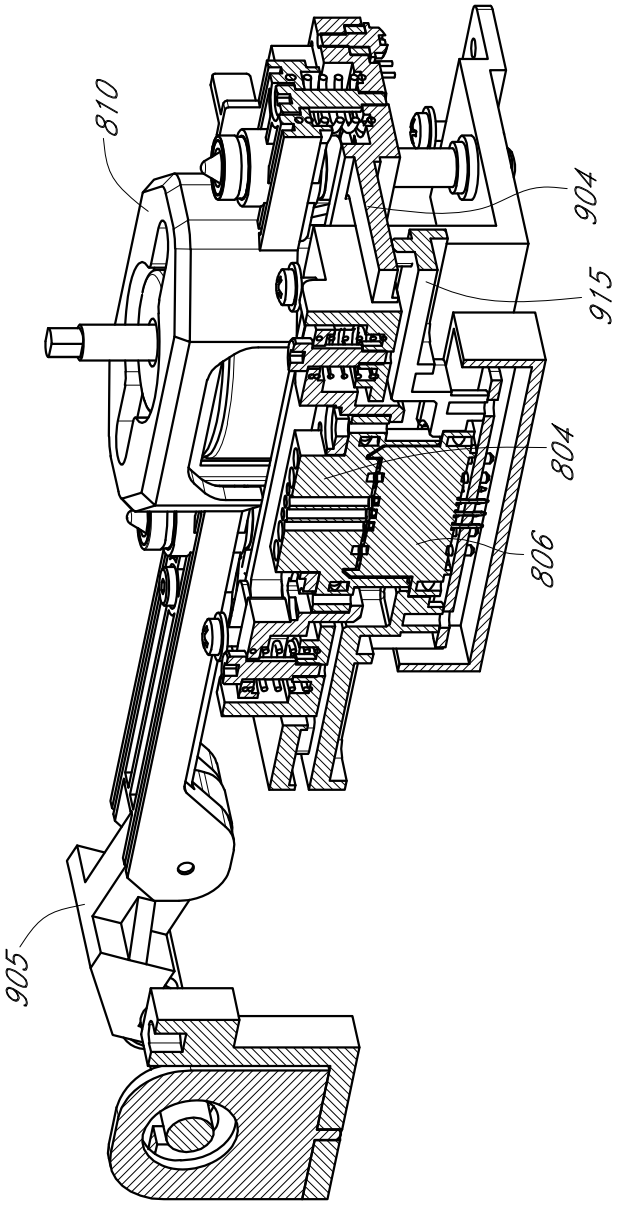

FIG. 9D

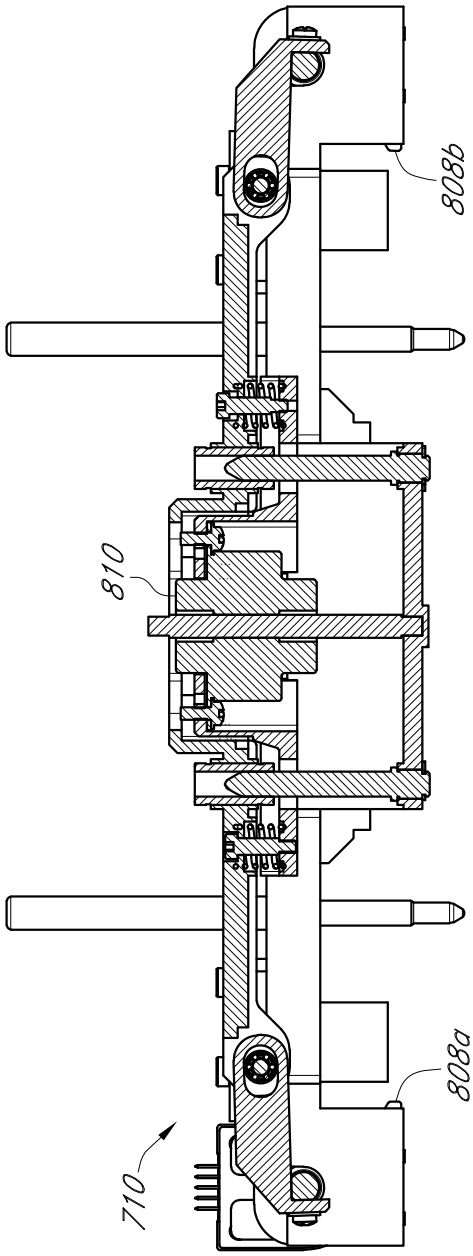

FIG. 9E

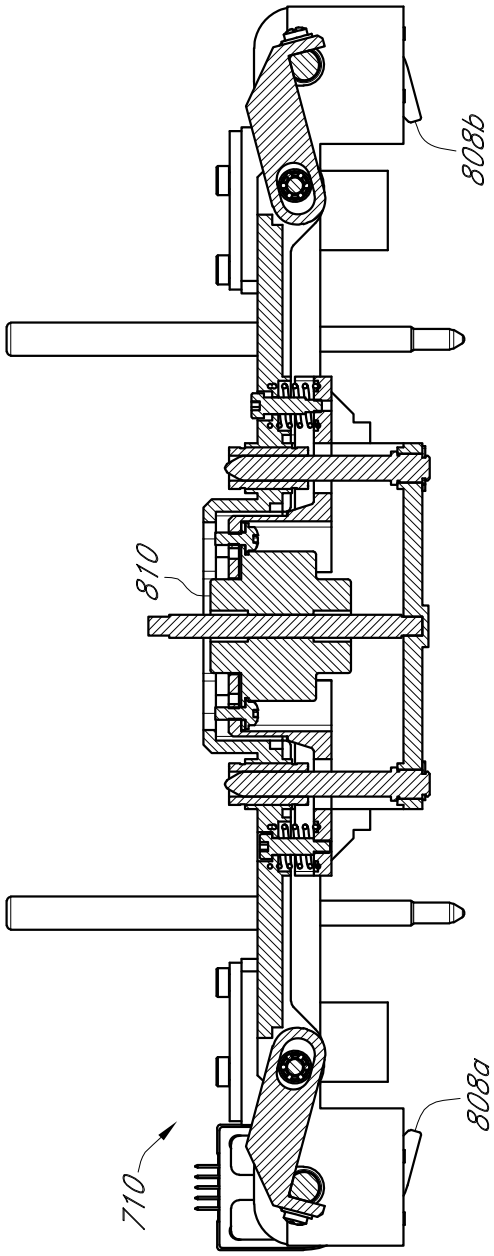

FIG. 9F

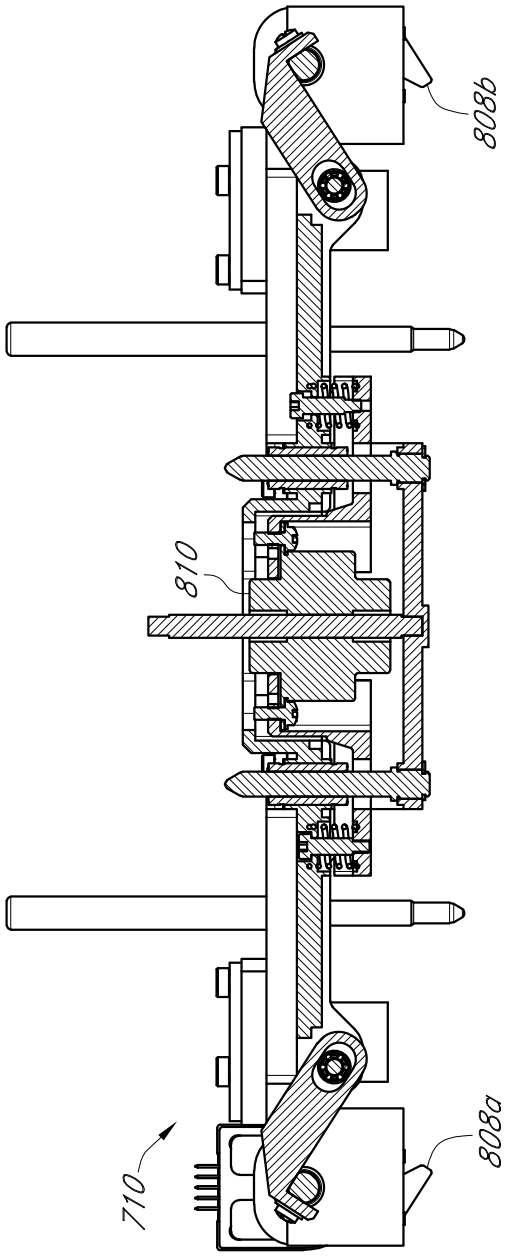

FIG. 9G

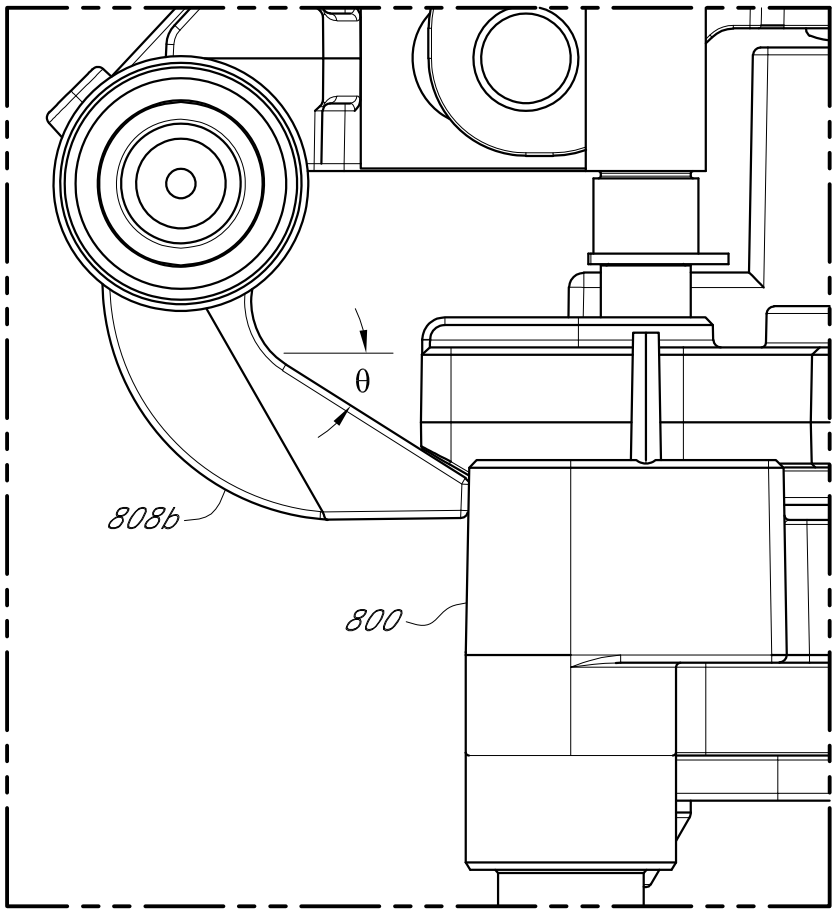

FIG. 9H

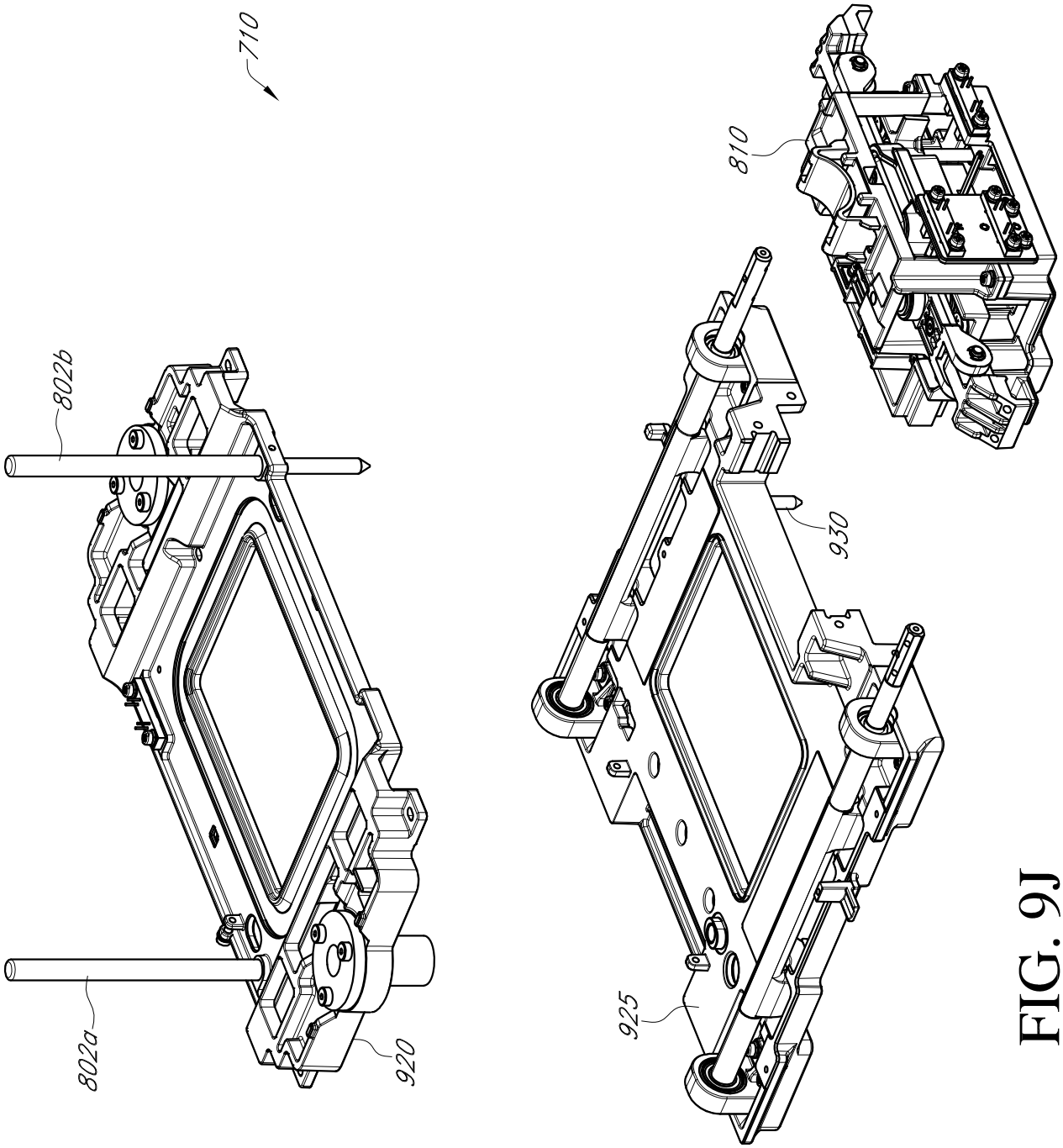

FIG. 9J

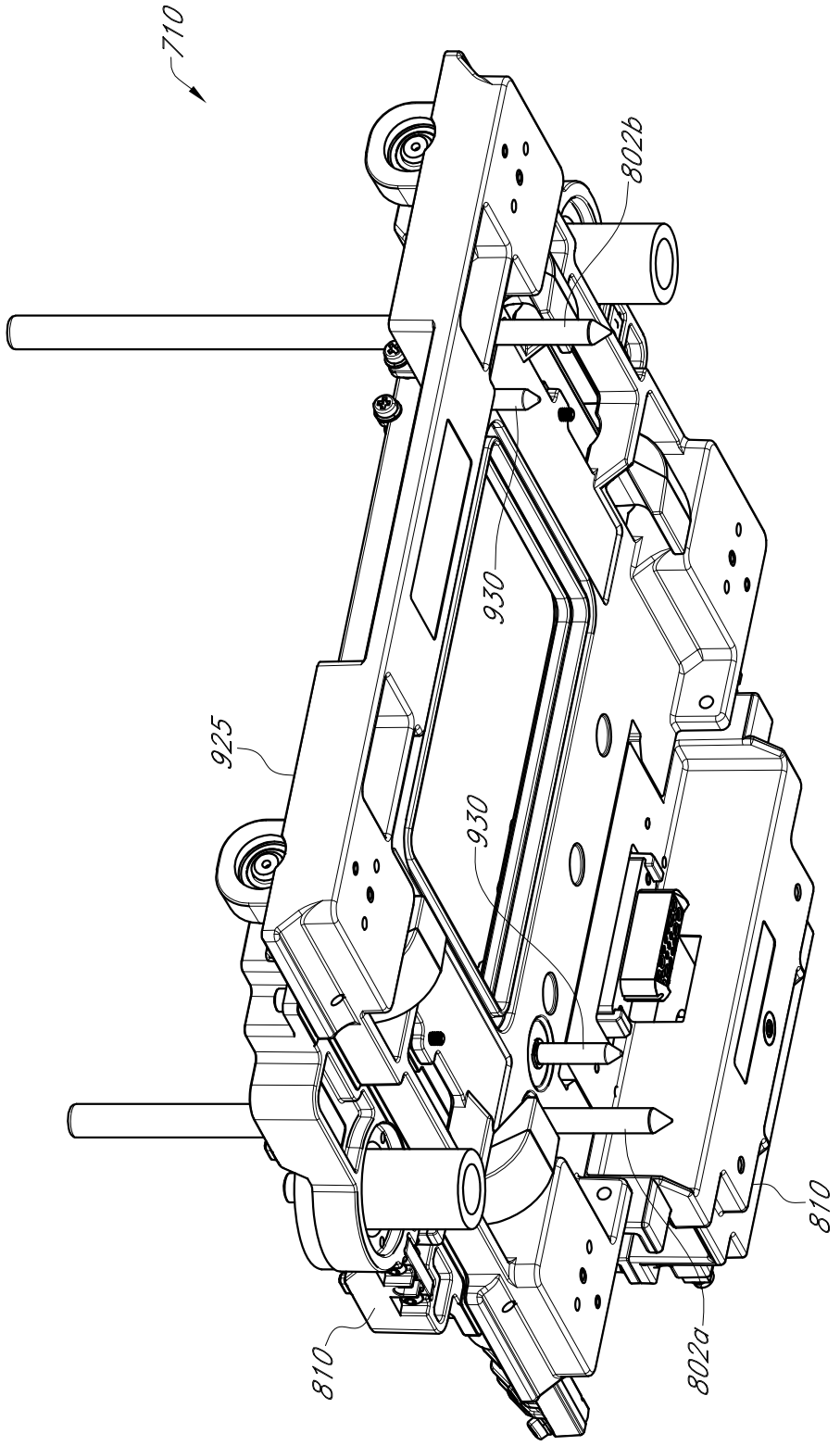

FIG. 9K

FIG. 10A

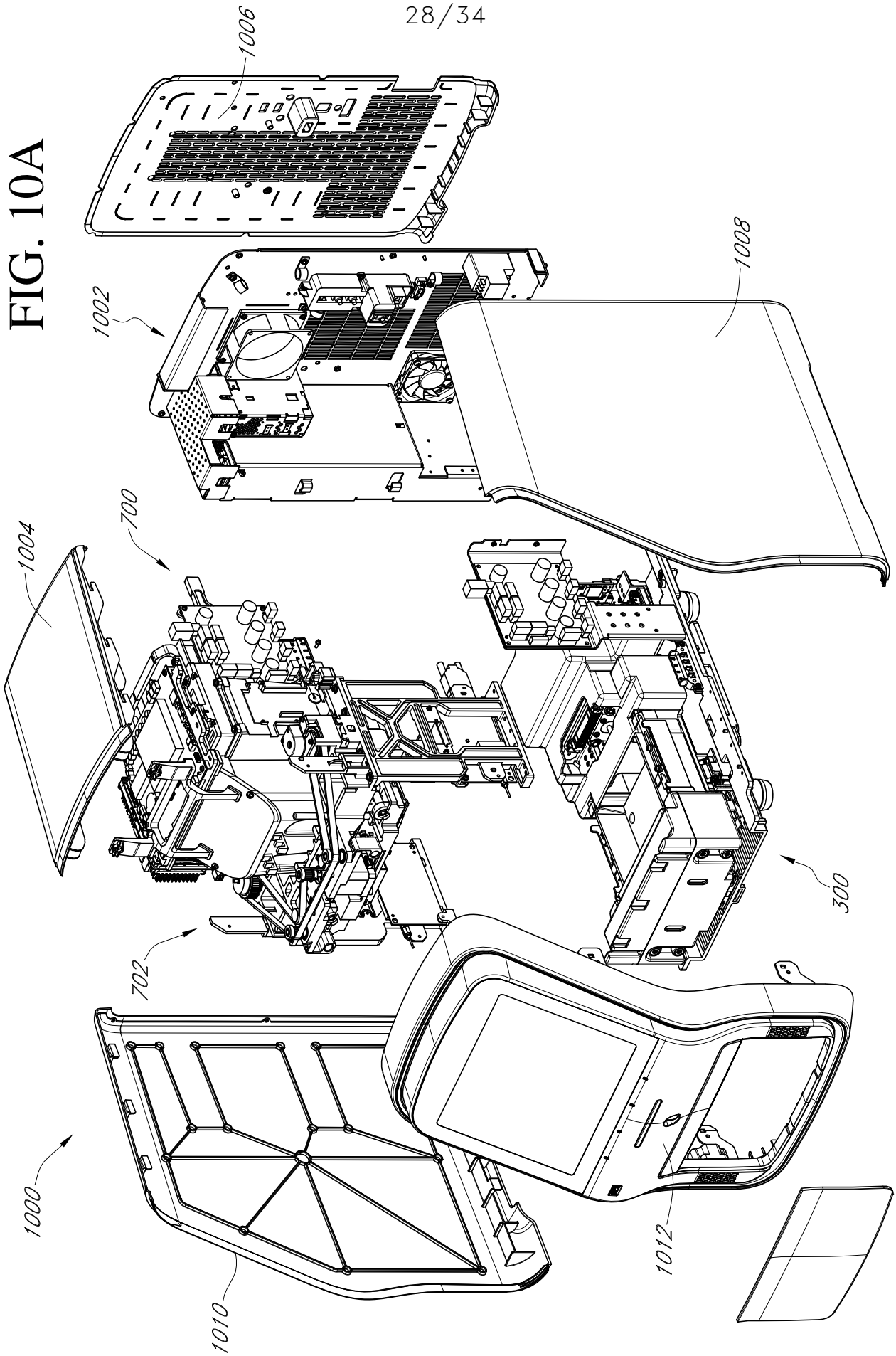

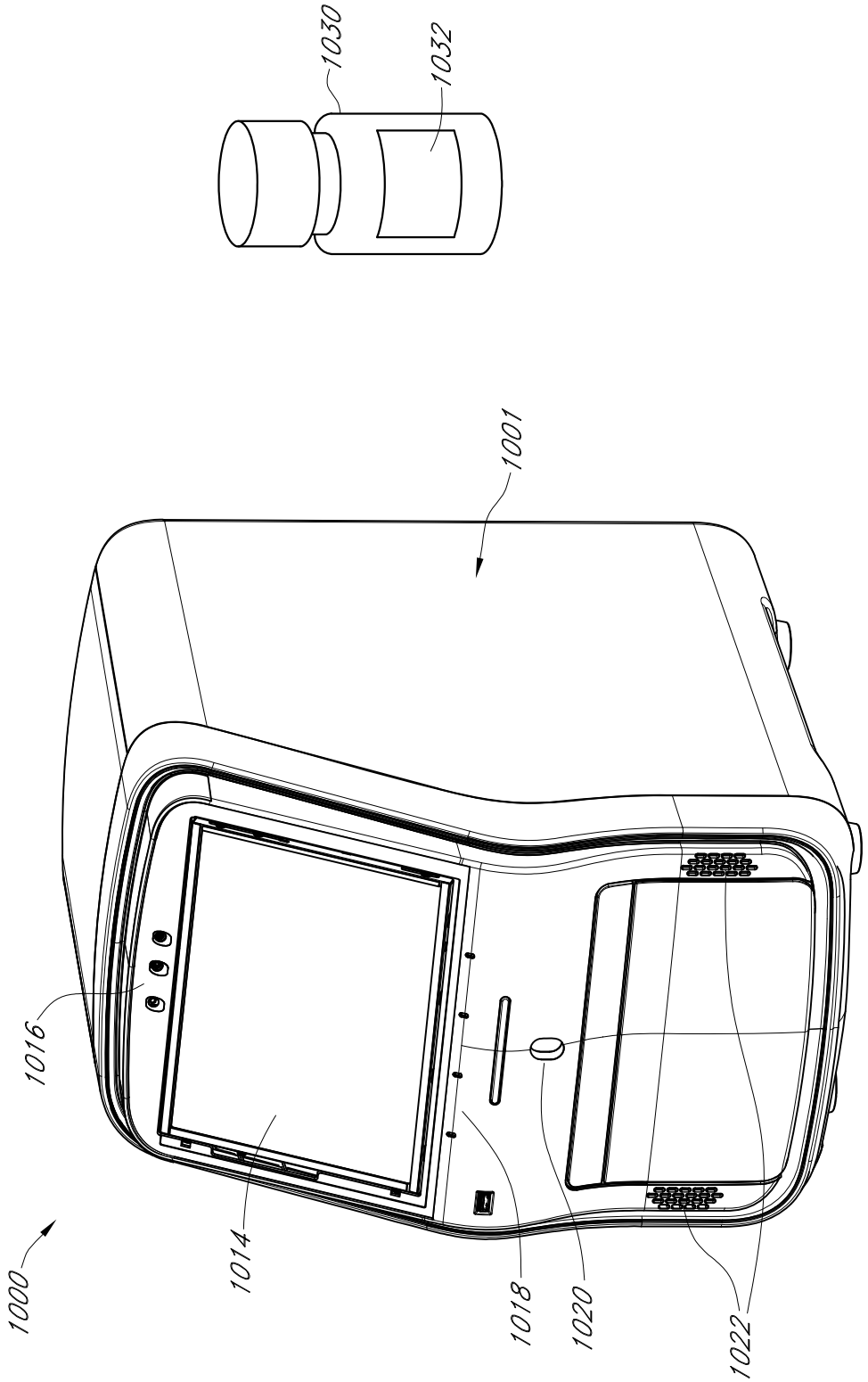

FIG. 10B

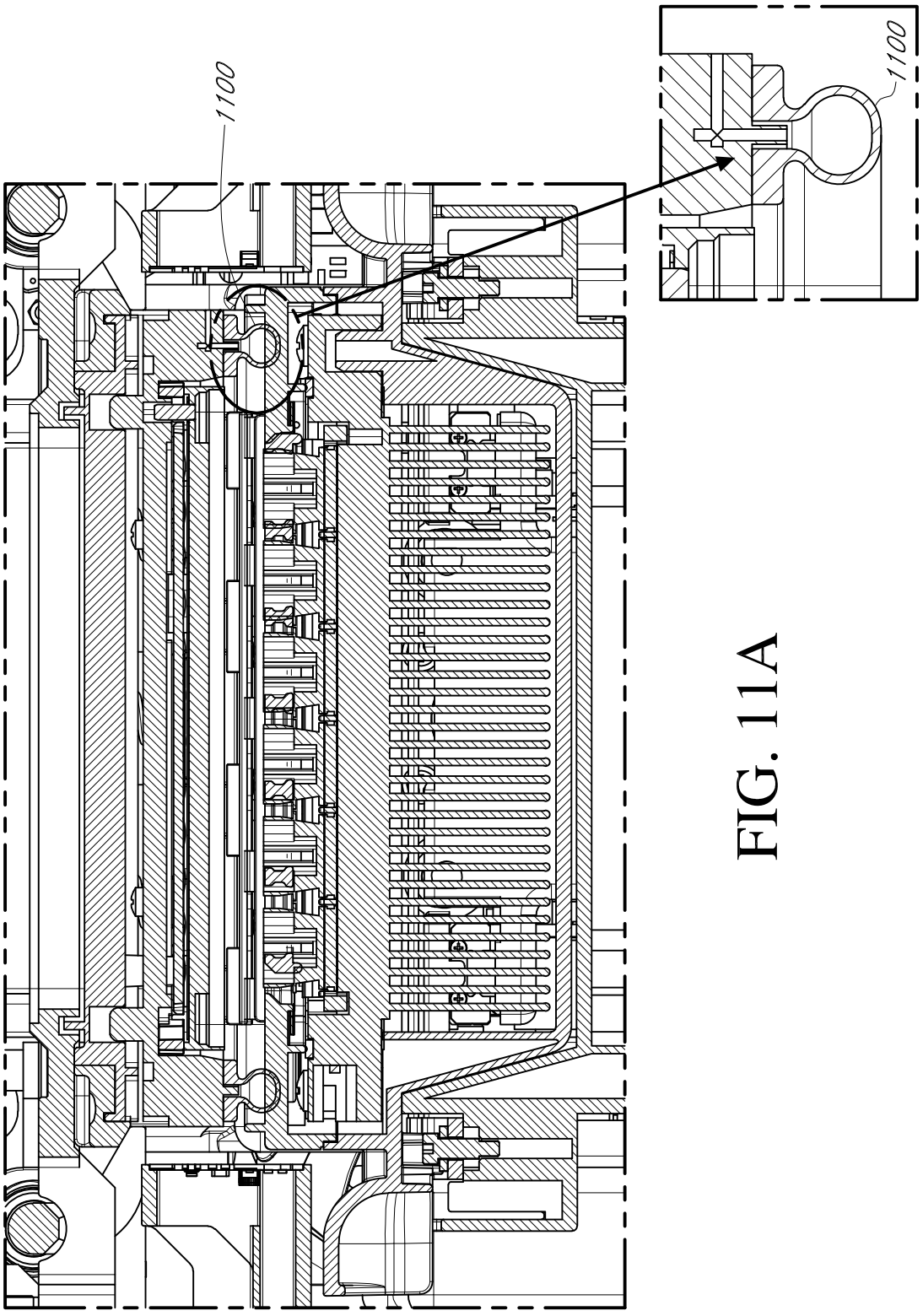

FIG. 11A

FIG. 11B

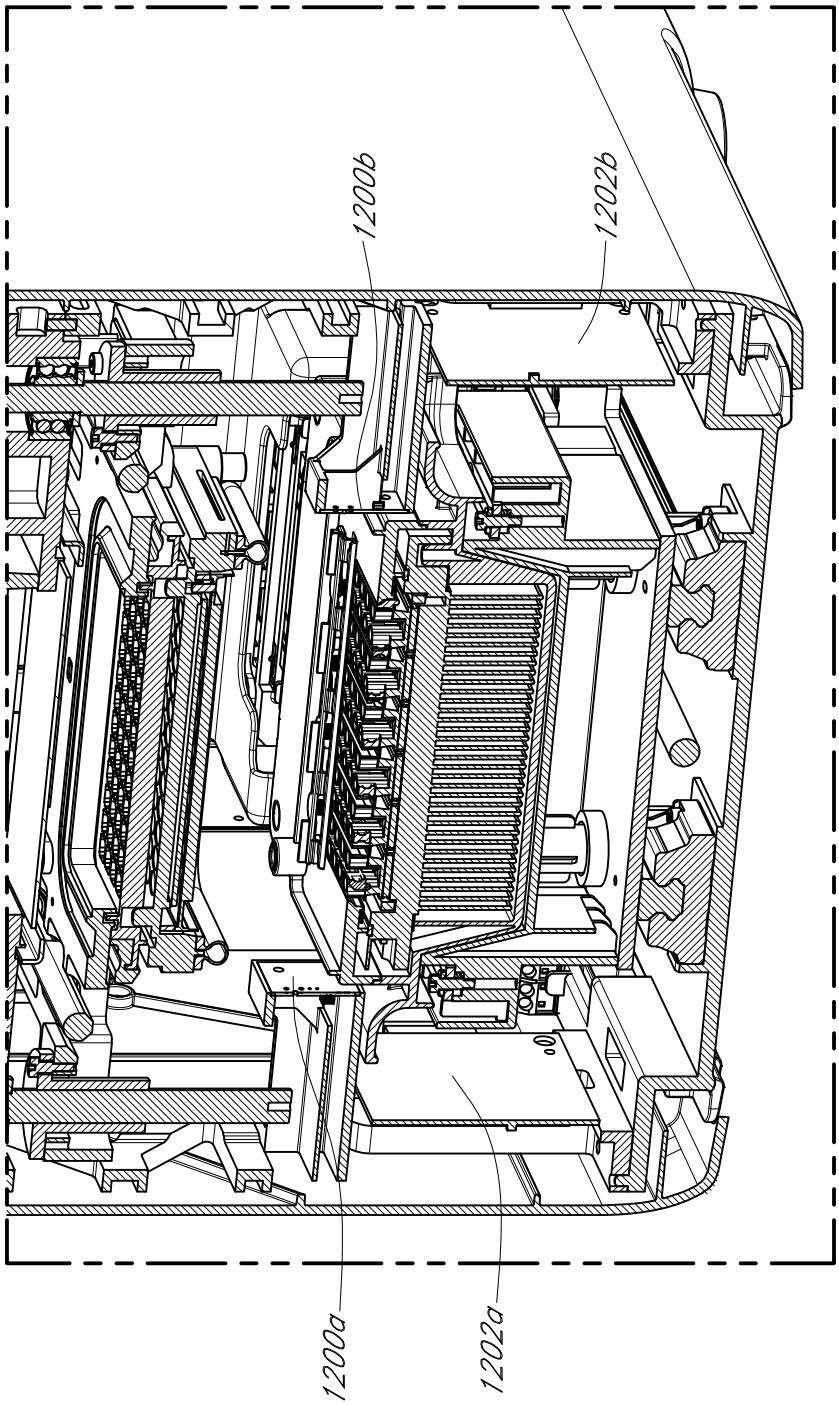

FIG. 12

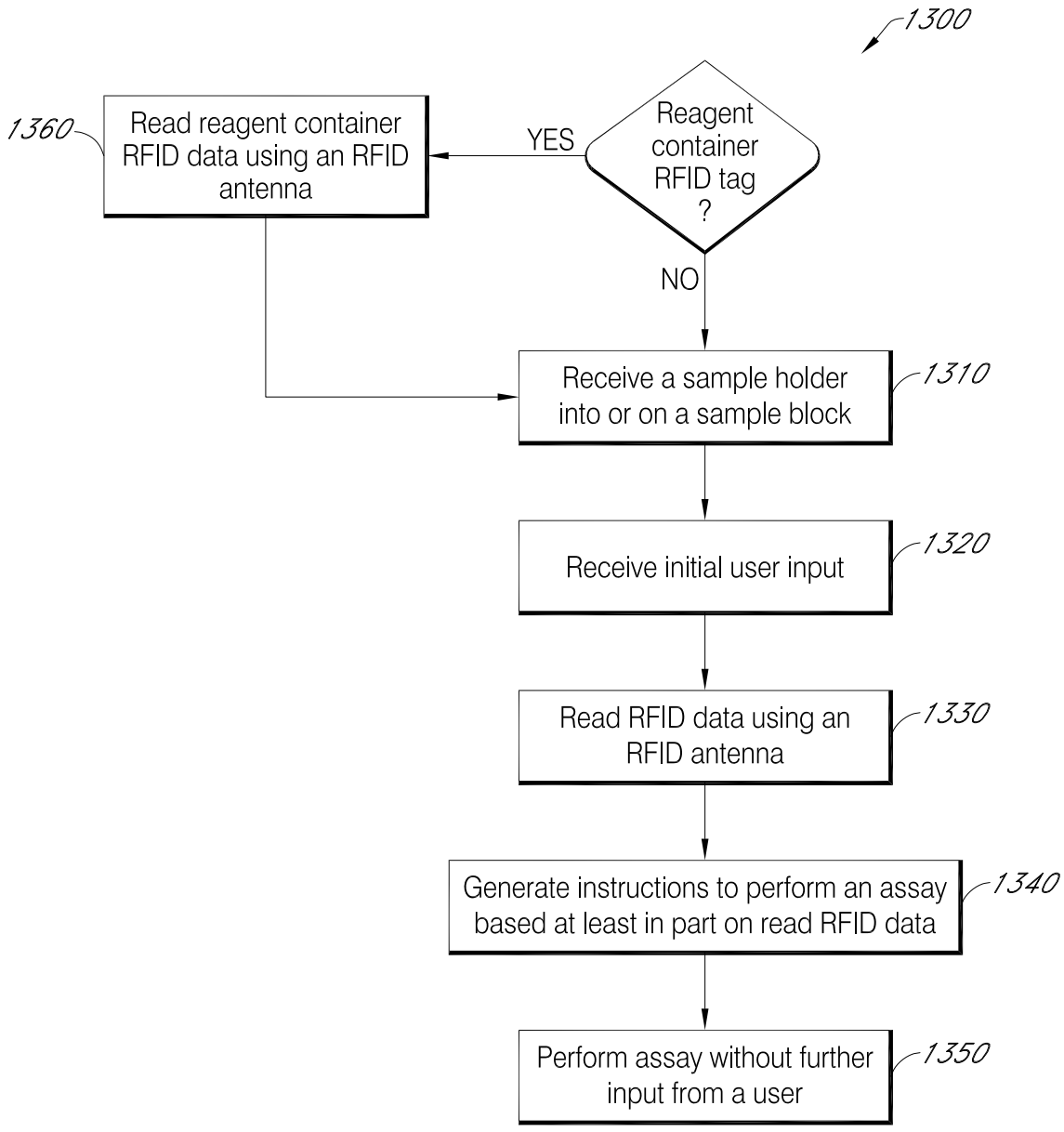
1300
Reagent container RFID tag ?
YES
NO
1360
Read reagent container RFID data using an RFID antenna
Receive a sample holder into or on a sample block
1310
Receive initial user input
1320
Read RFID data using an RFID antenna
1330
Generate instructions to perform an assay based at least in part on read RFID data
1340
Perform assay without further input from a user
1350

FIG. 13

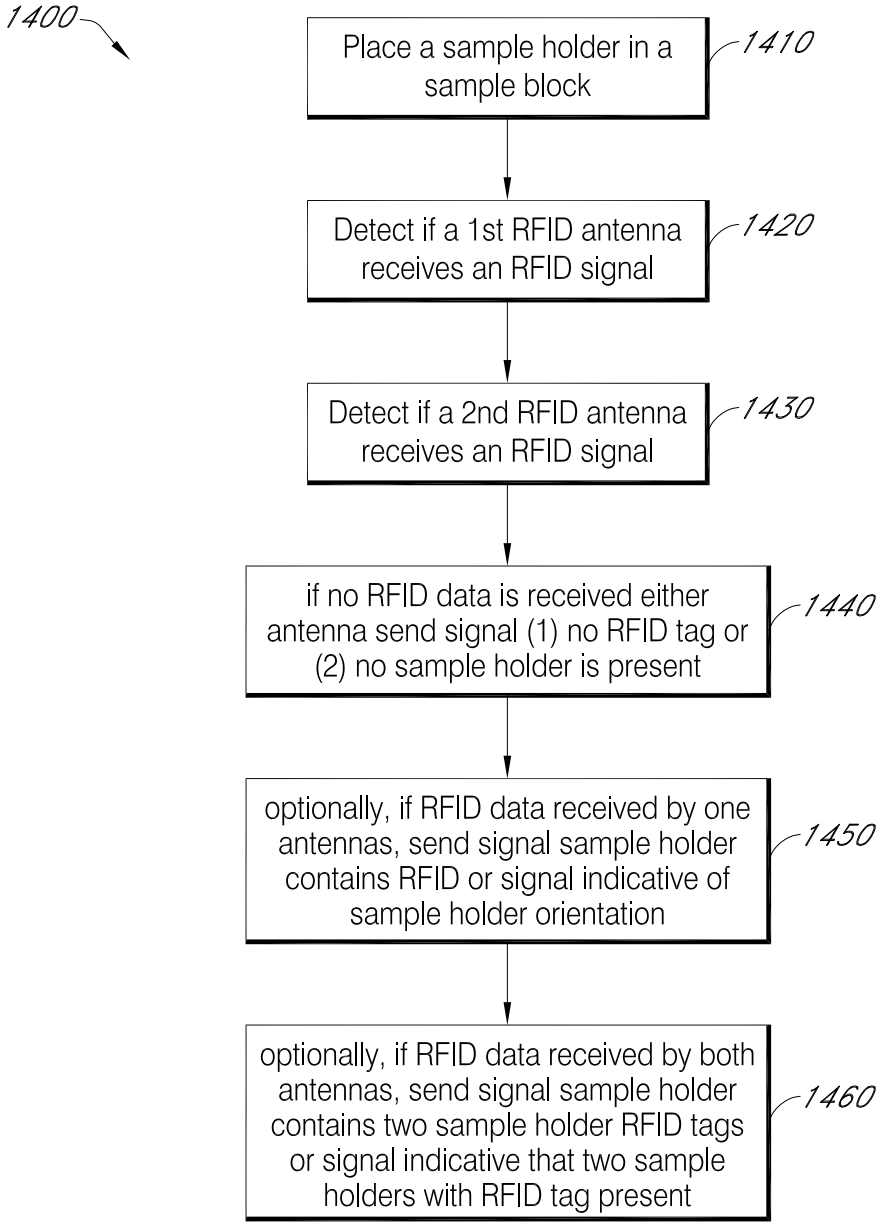
1400
Place a sample holder in a sample block
1410
Detect if a 1st RFID antenna receives an RFID signal
1420
Detect if a 2nd RFID antenna receives an RFID signal
1430
if no RFID data is received either antenna send signal (1) no RFID tag or (2) no sample holder is present
1440
optionally, if RFID data received by one antennas, send signal sample holder contains RFID or signal indicative of sample holder orientation
1450
optionally, if RFID data received by both antennas, send signal sample holder contains two sample holder RFID tags or signal indicative that two sample holders with RFID tag present
1460

FIG. 14

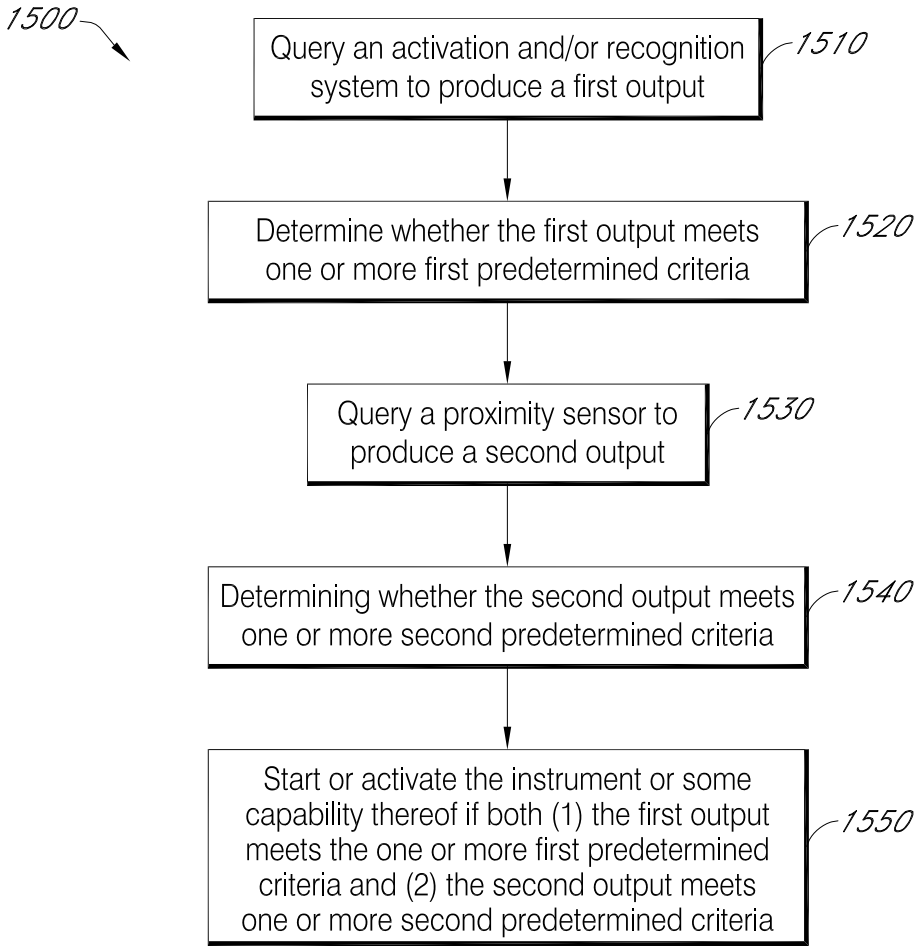
1500
Query an activation and/or recognition system to produce a first output
1510
Determine whether the first output meets one or more first predetermined criteria
1520
Query a proximity sensor to produce a second output
1530
Determining whether the second output meets one or more second predetermined criteria
1540
Start or activate the instrument or some capability thereof if both (1) the first output meets the one or more first predetermined criteria and (2) the second output meets one or more second predetermined criteria
1550

FIG. 15