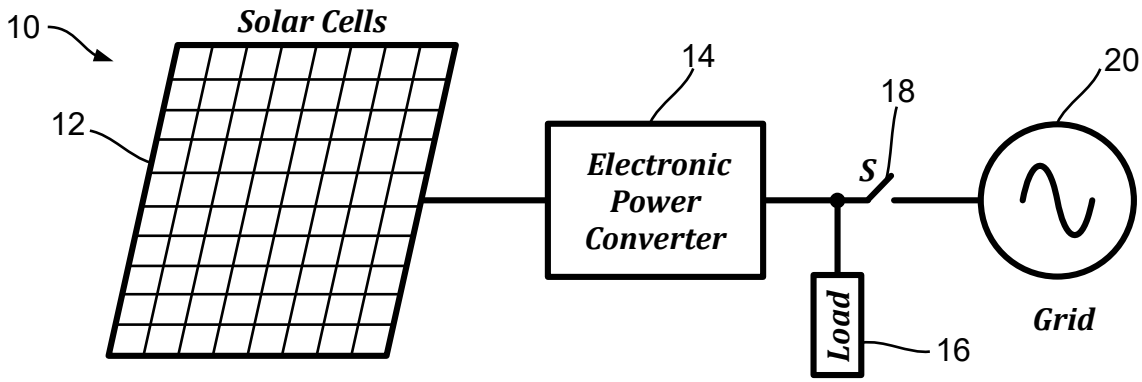

FIG. 1 (Prior Art)

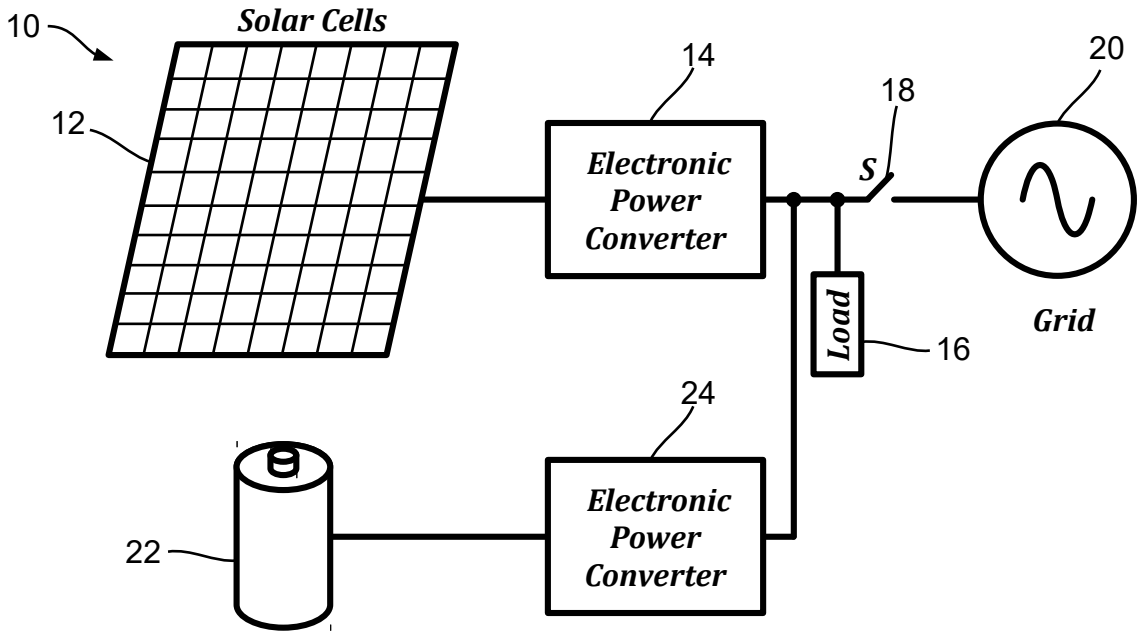

FIG. 2 (Prior Art)

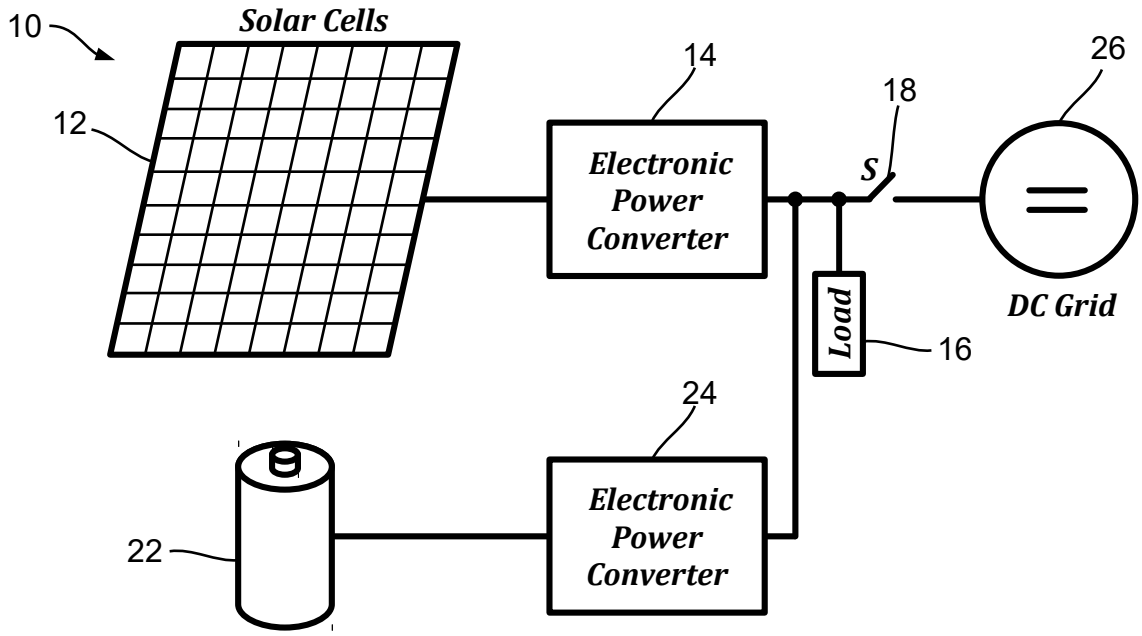

FIG. 3 (Prior Art)

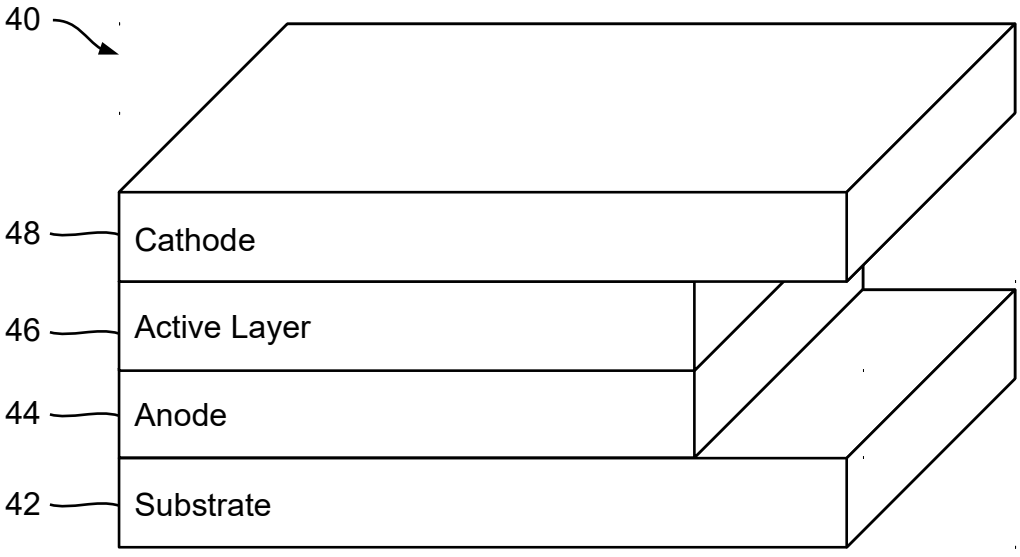

FIG. 4 (Prior Art)

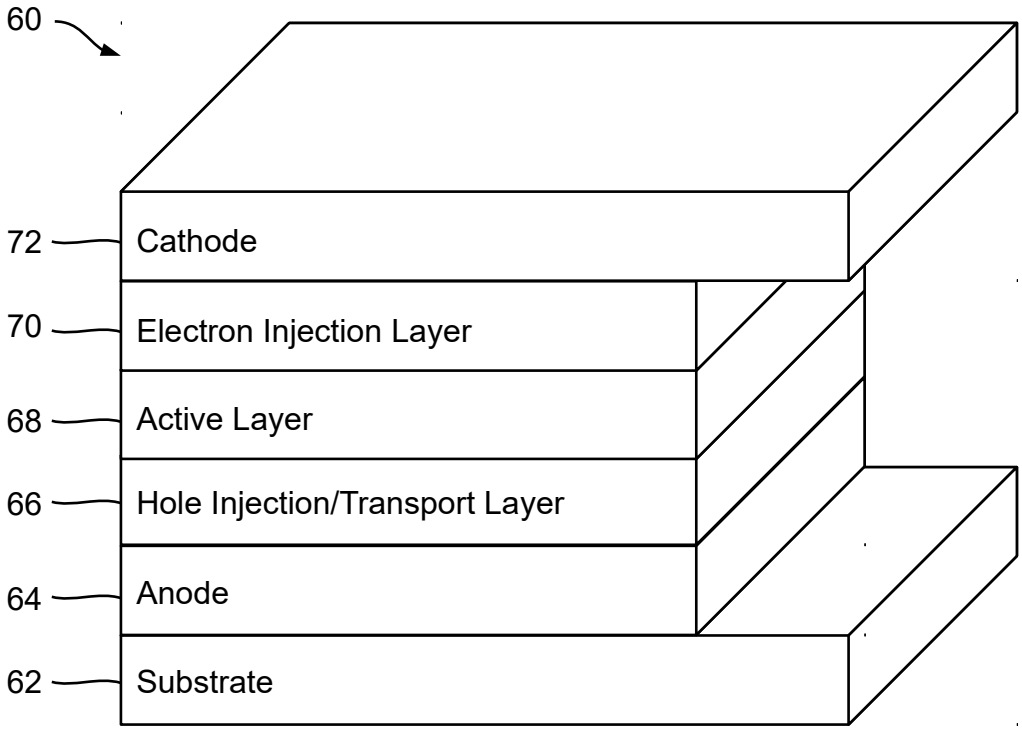

FIG. 5 (Prior Art)

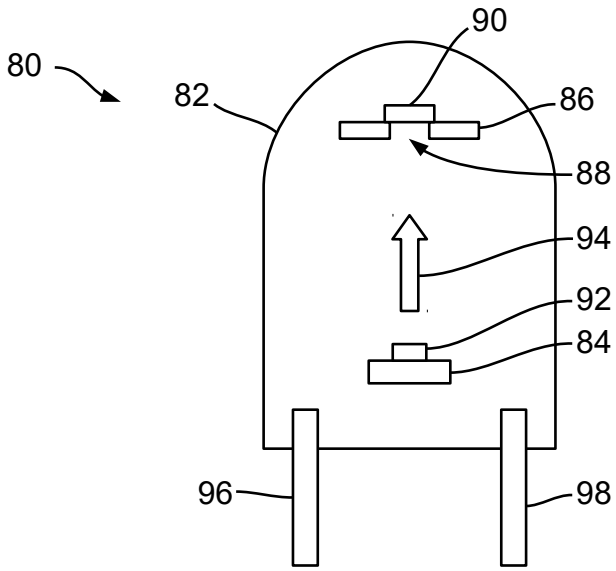

FIG. 6 (Prior Art)

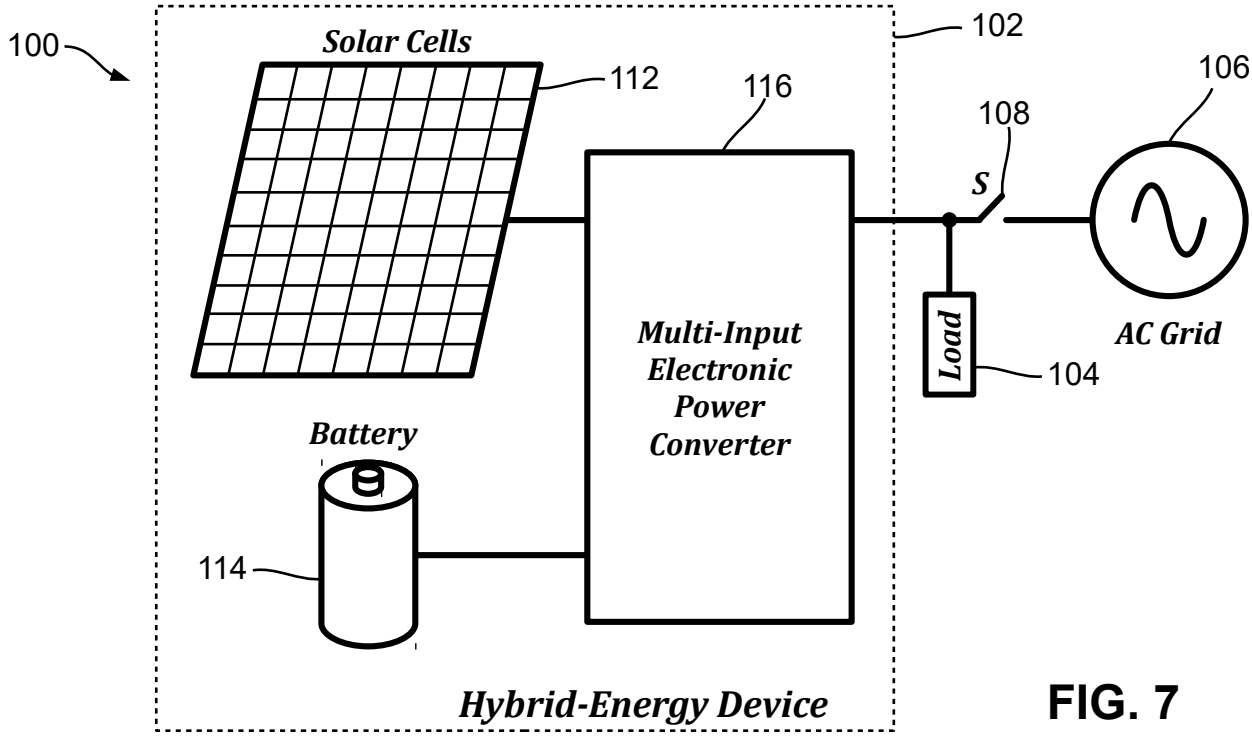
100
Solar Cells
112
116
102
106
108
S
Multi-Input
Electronic
Power
Converter
Load
104
AC Grid
Battery
114
Hybrid-Energy Device

FIG. 7

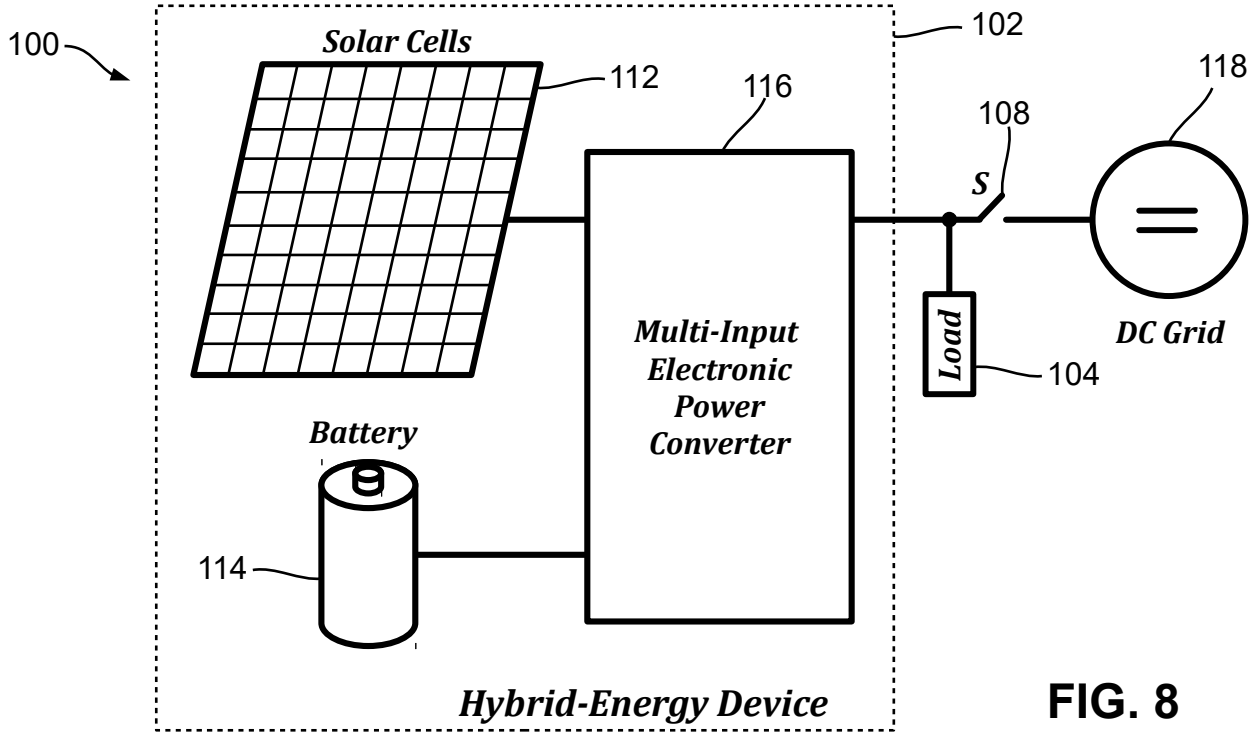
100
Solar Cells
112
116
102
118
108
S
Multi-Input
Electronic
Power
Converter
Load
104
DC Grid
Battery
114
Hybrid-Energy Device

FIG. 8

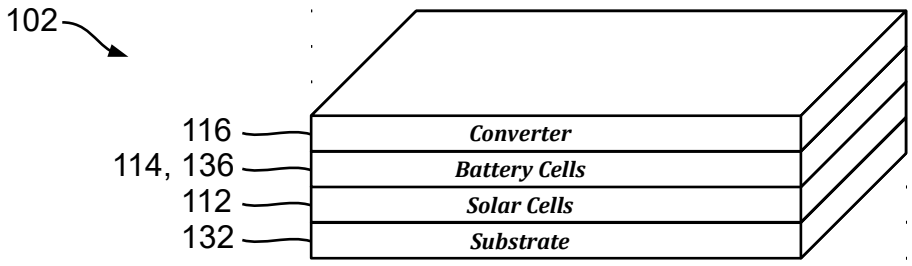

FIG. 9A

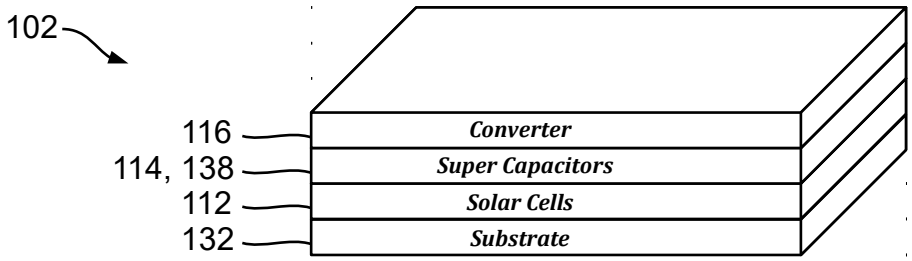

FIG. 9B

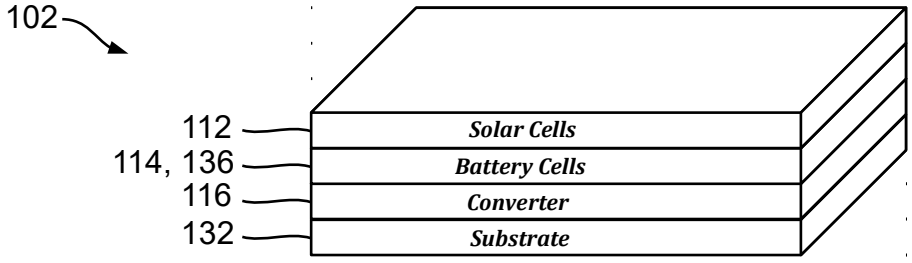

FIG. 10

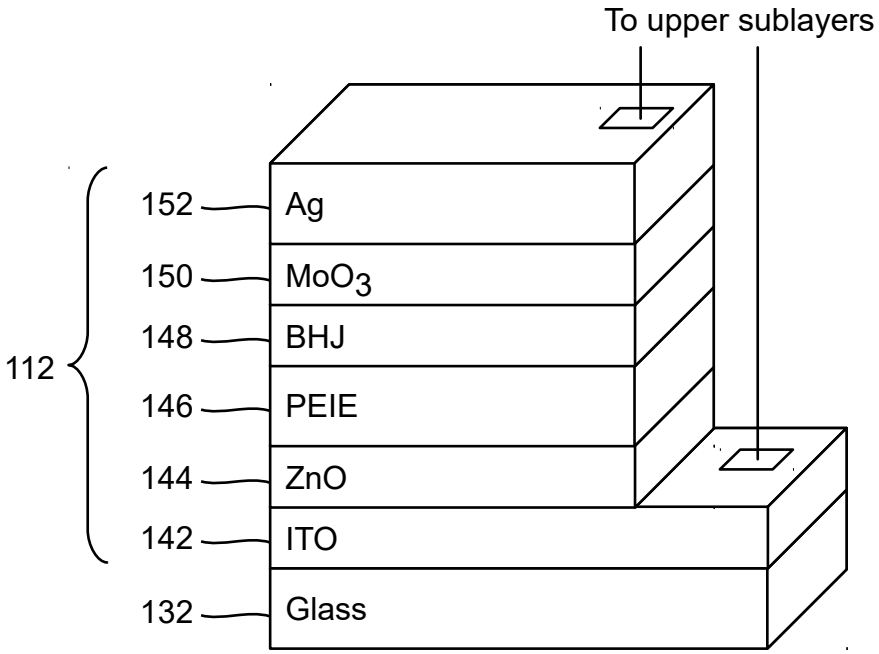

FIG. 11A

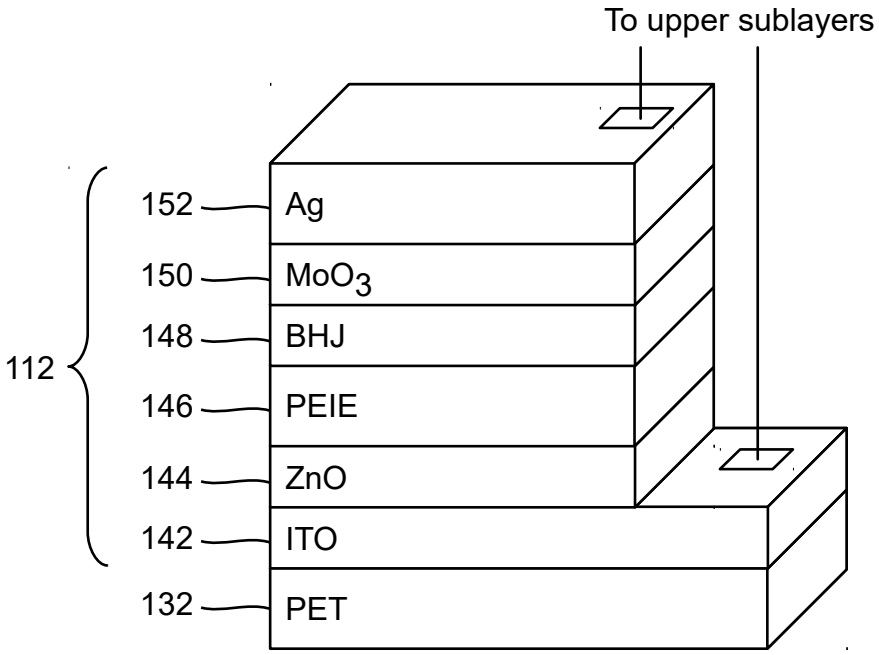

FIG. 11B

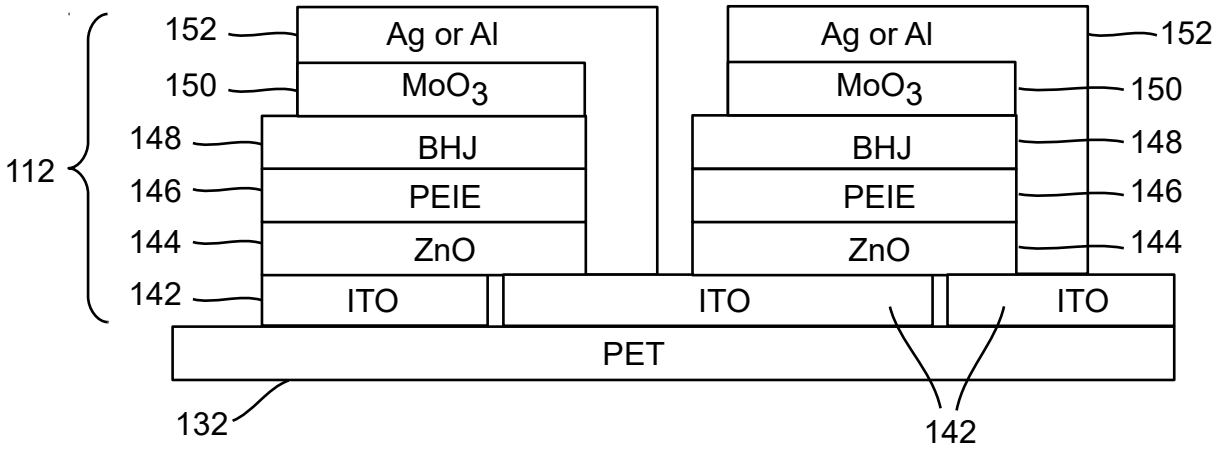
152
Ag or Al
150
MoO_3
148
BHJ
146
PEIE
144
ZnO
142
ITO
ITO
ITO
PET
112
132
142
Ag or Al
152
MoO_3
150
BHJ
148
PEIE
146
ZnO
144

FIG. 12

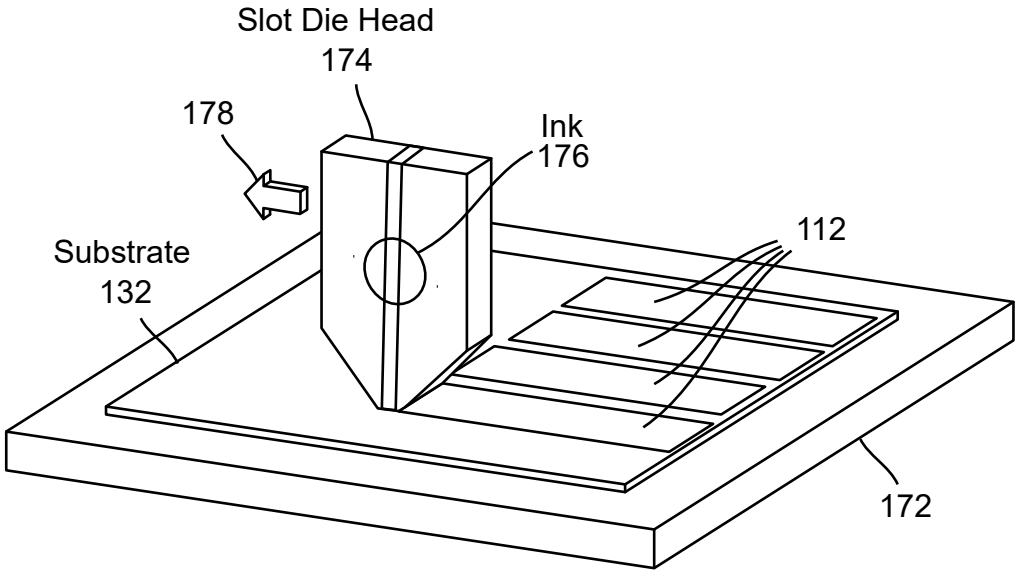
Slot Die Head
174
178
Ink
176
112
Substrate
132
172

FIG. 13

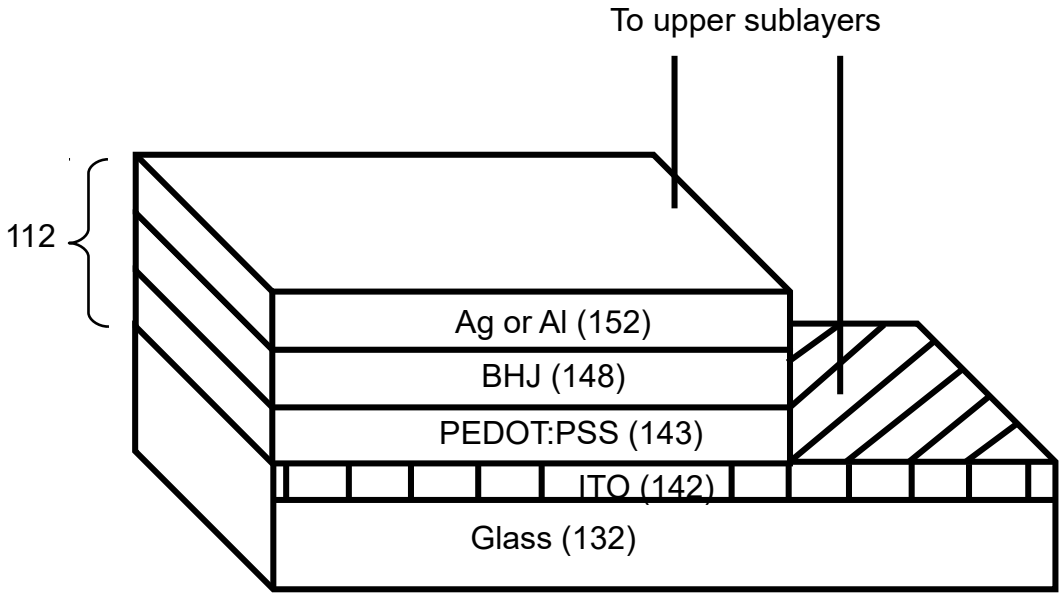
To upper sublayers
112
Ag or Al (152)
BHJ (148)
PEDOT:PSS (143)
ITO (142)
Glass (132)

FIG. 14

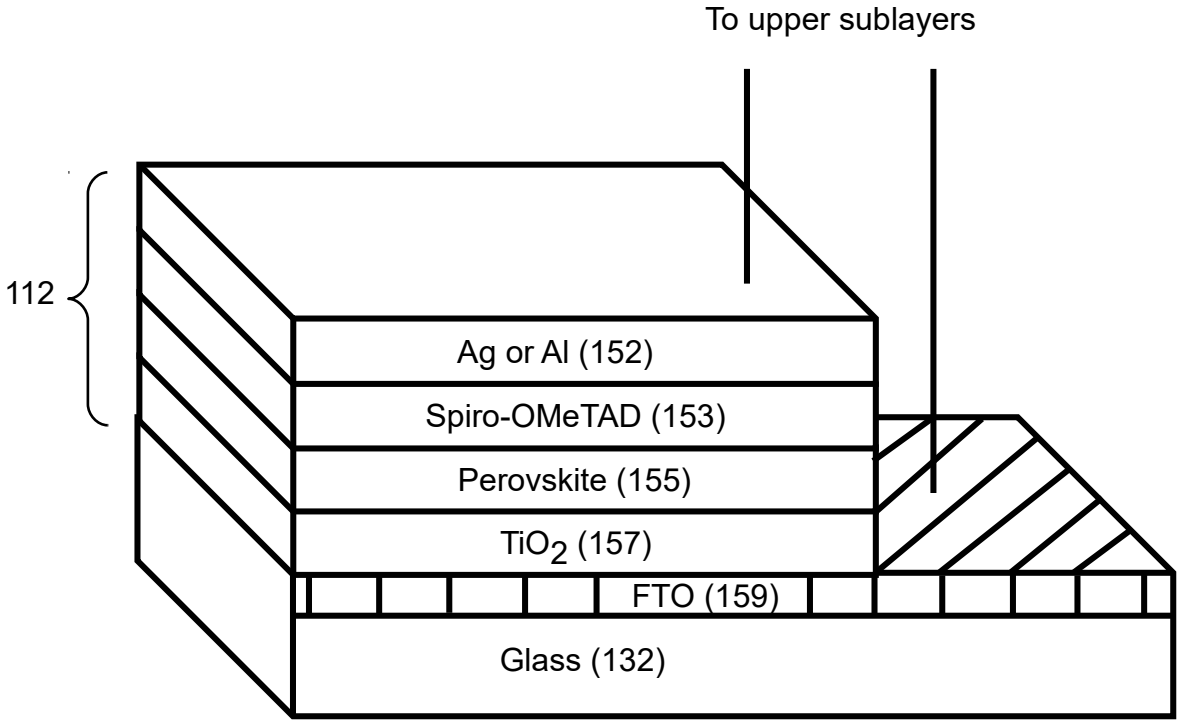
To upper sublayers
112
Ag or Al (152)
Spiro-OMeTAD (153)
Perovskite (155)
TiO_2 (157)
FTO (159)
Glass (132)

FIG. 15

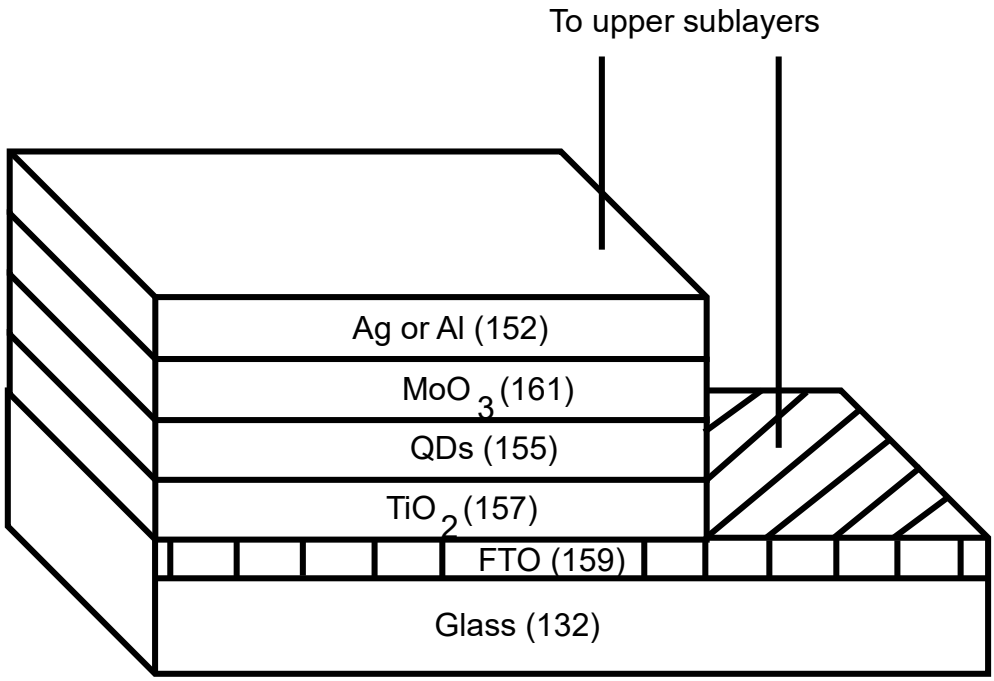
To upper sublayers
Ag or Al (152)
MoO 3 (161)
QDs (155)
TiO 2 (157)
FTO (159)
Glass (132)

FIG. 16

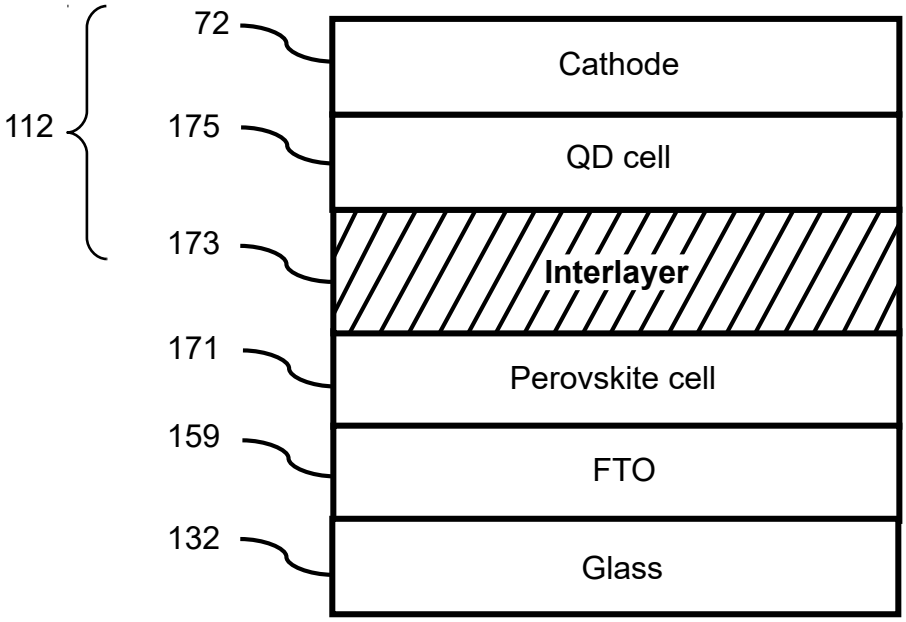
72
112
175
173
171
159
132
Cathode
QD cell
Interlayer
Perovskite cell
FTO
Glass

FIG. 17

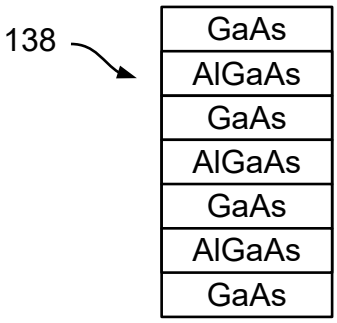

FIG. 18

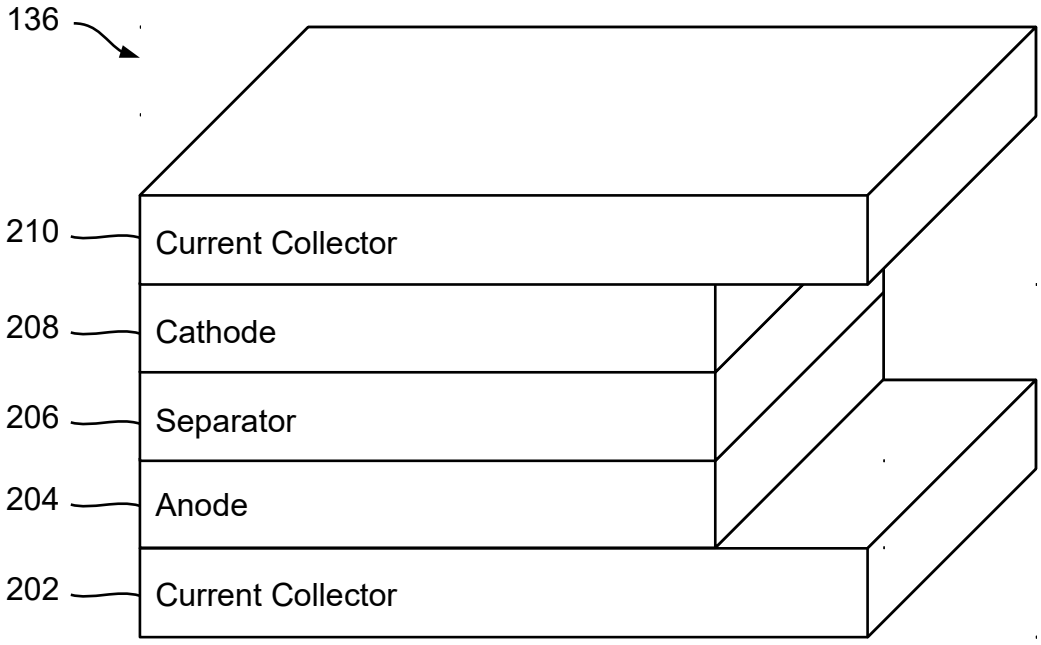

FIG. 19A

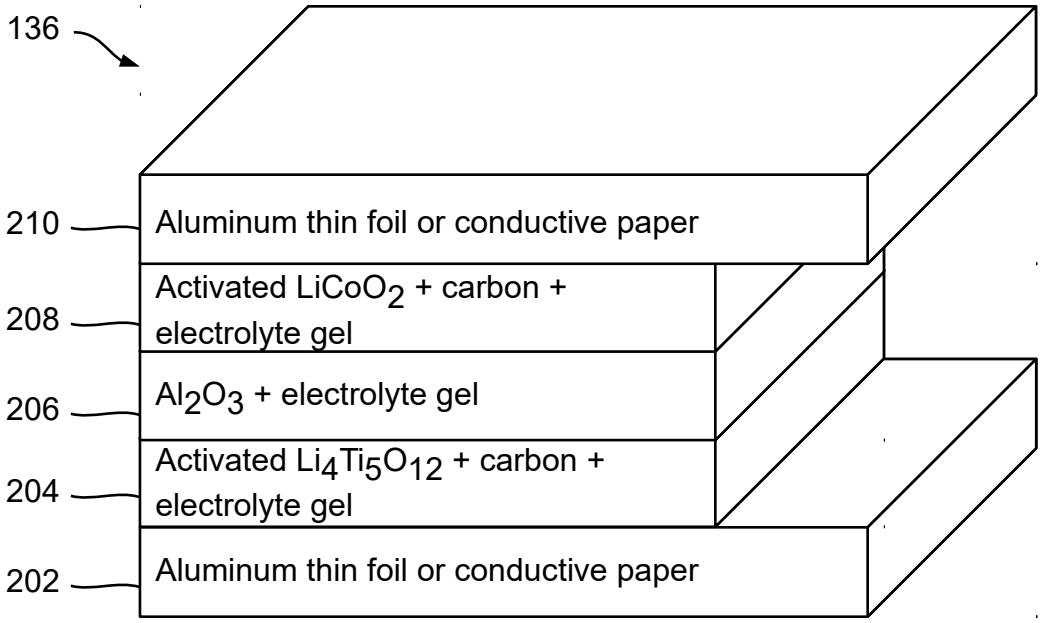

FIG. 19B

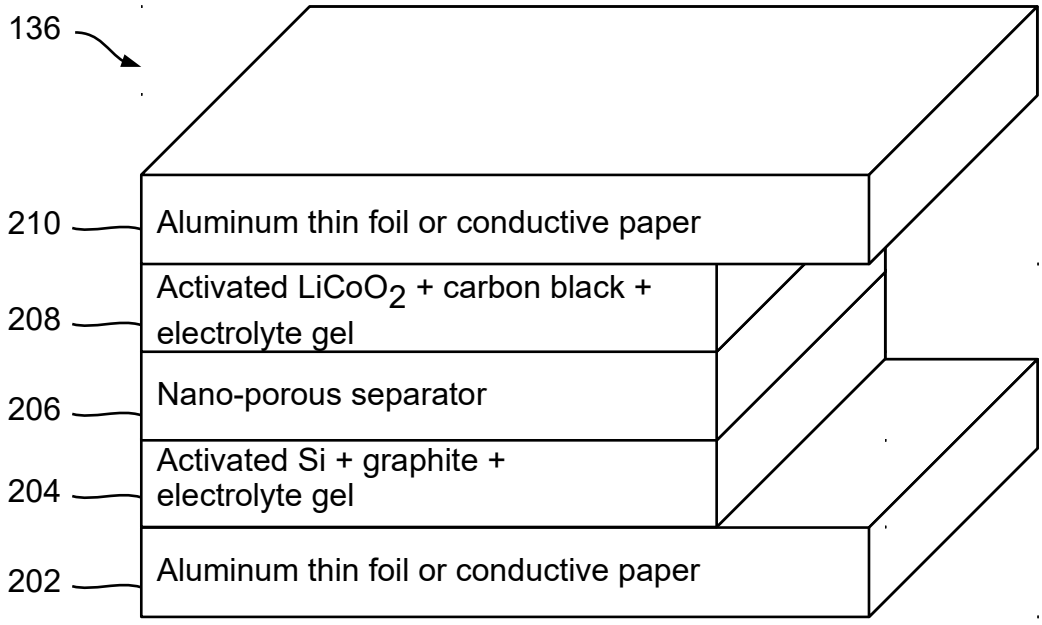

FIG. 19C

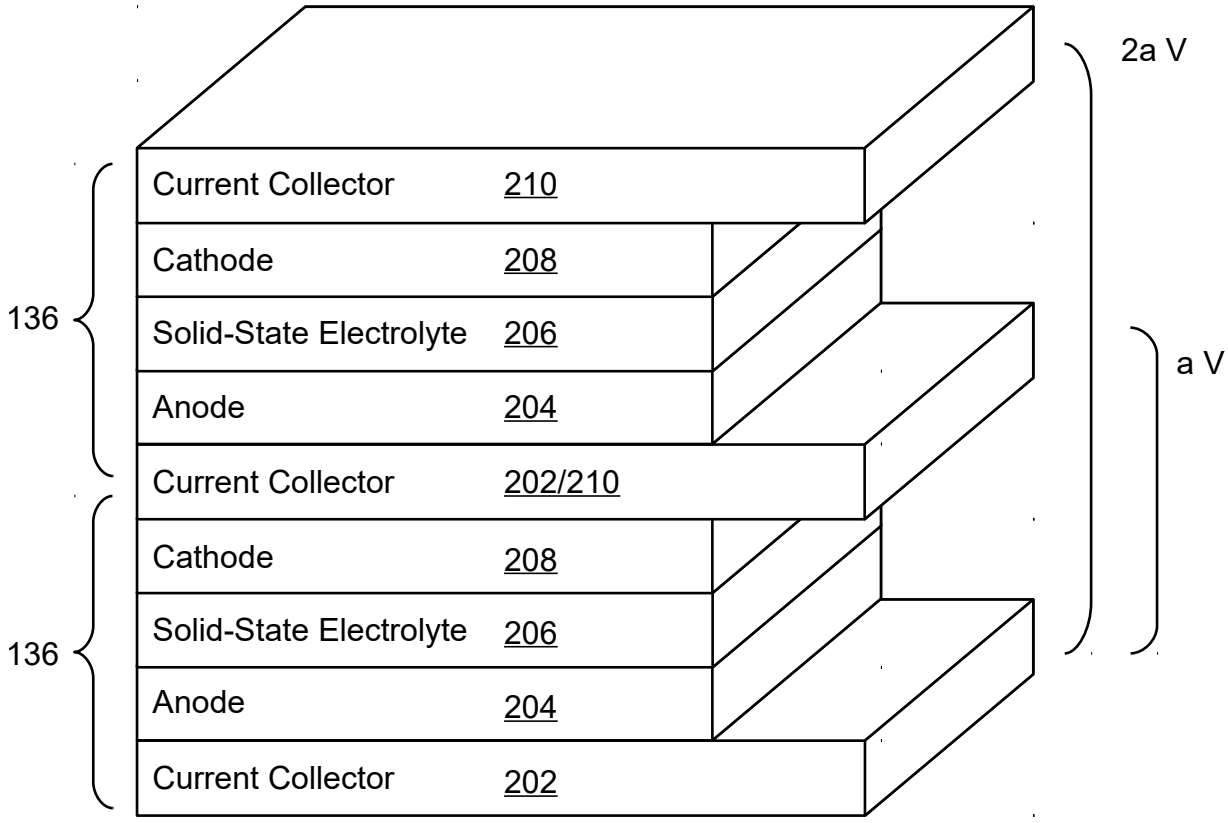
2a V
a V
136
136
Current Collector 210
Cathode 208
Solid-State Electrolyte 206
Anode 204
Current Collector 202/210
Cathode 208
Solid-State Electrolyte 206
Anode 204
Current Collector 202

FIG. 20

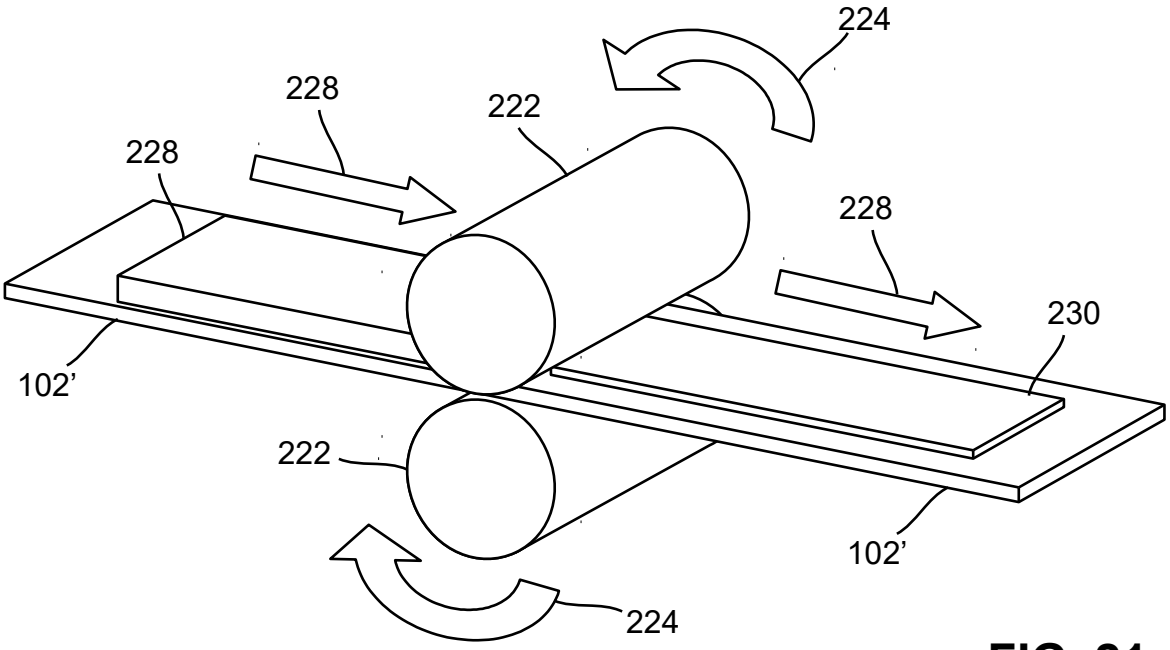
224
228
222
228
228
230
102'
222
102'
224

FIG. 21

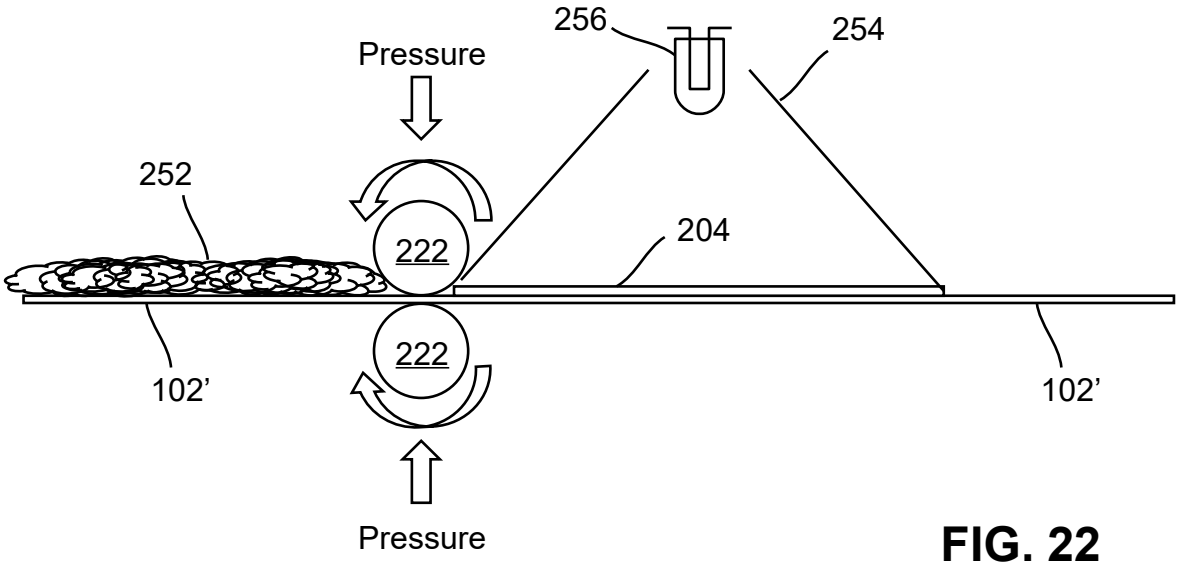
256
254
Pressure
252
222
204
222
102'
102'
Pressure

FIG. 22

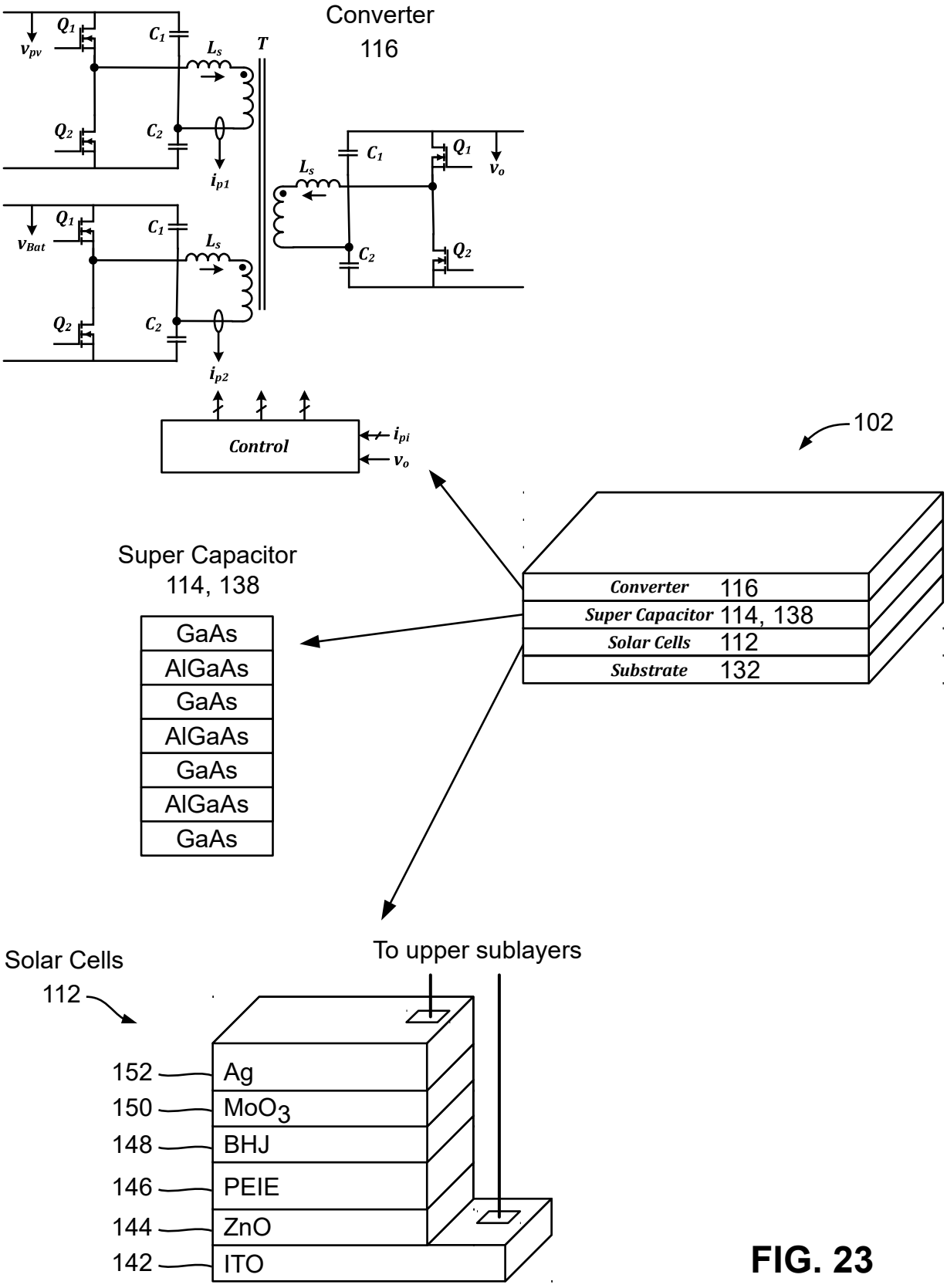
Converter
116
Q_1
C_1
L_s
T
v_{pv}
Q_2
C_2
i_{p1}
v_{Bat}
i_{p2}
v_o
Control
i_{pi}
102
Super Capacitor
114, 138
GaAs
AlGaAs
GaAs
AlGaAs
GaAs
AlGaAs
GaAs
Converter 116
Super Capacitor 114, 138
Solar Cells 112
Substrate 132
To upper sublayers
Solar Cells
112
152
Ag
150
MoO_3
148
BHJ
146
PEIE
144
ZnO
142
ITO

FIG. 23

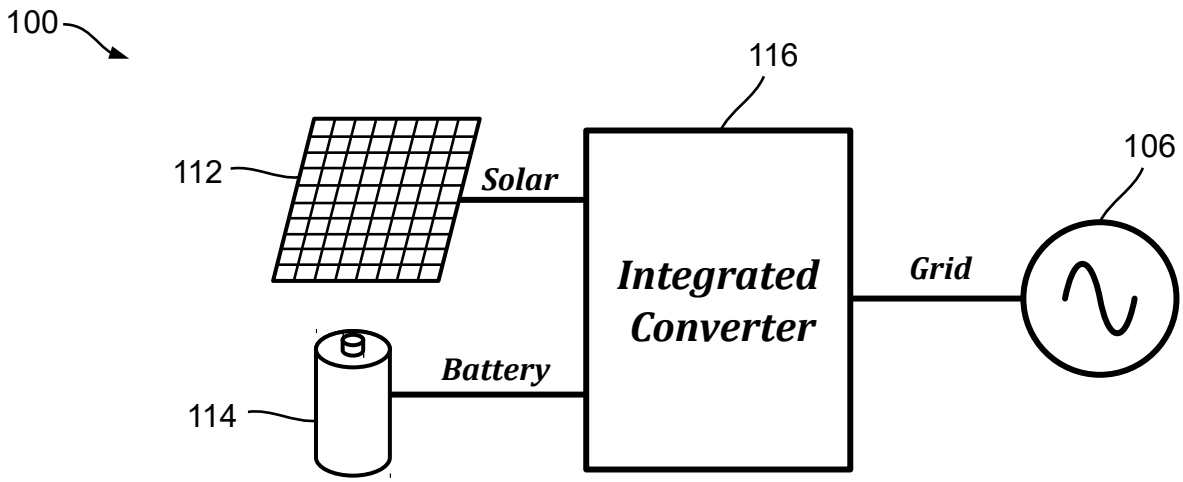

FIG. 24A

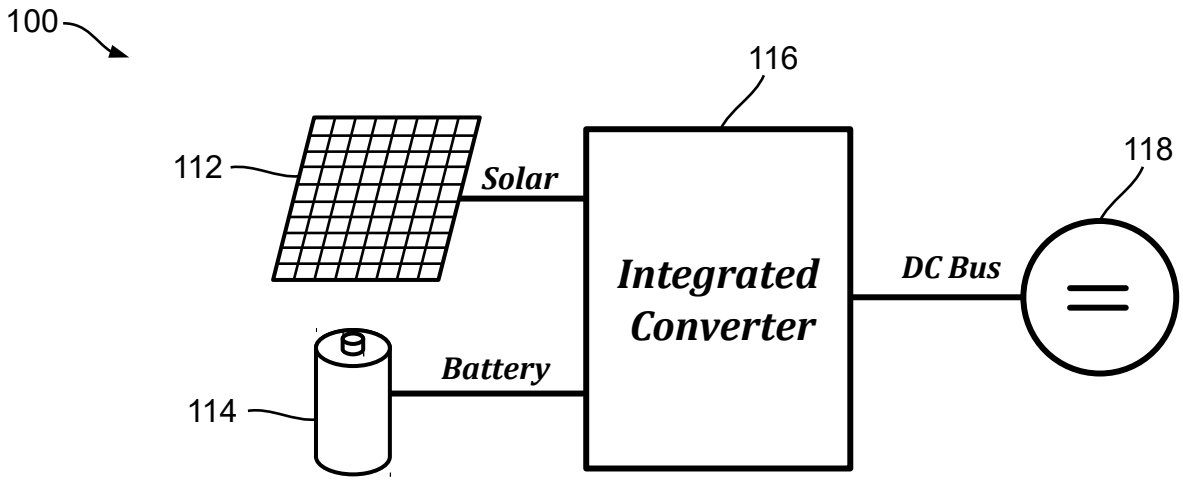

FIG. 24B

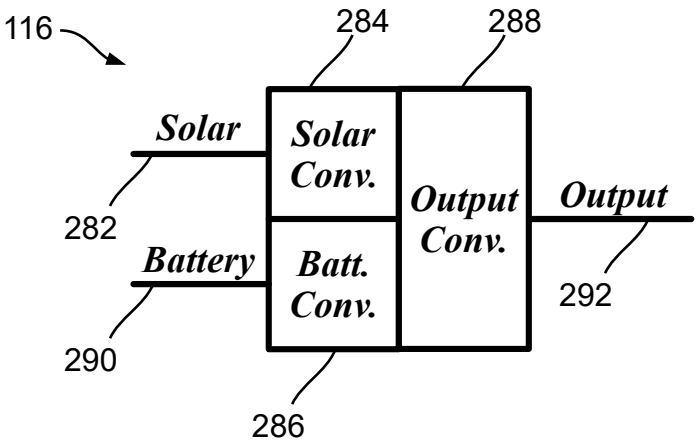

FIG. 25A

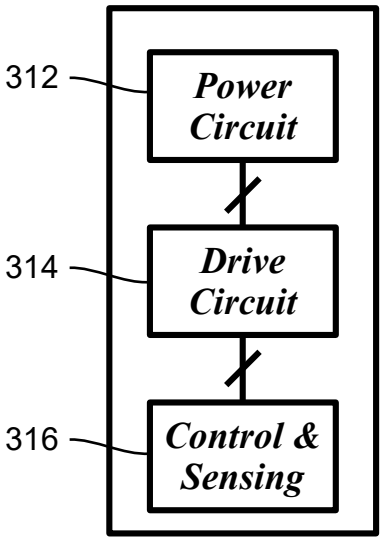

FIG. 25B

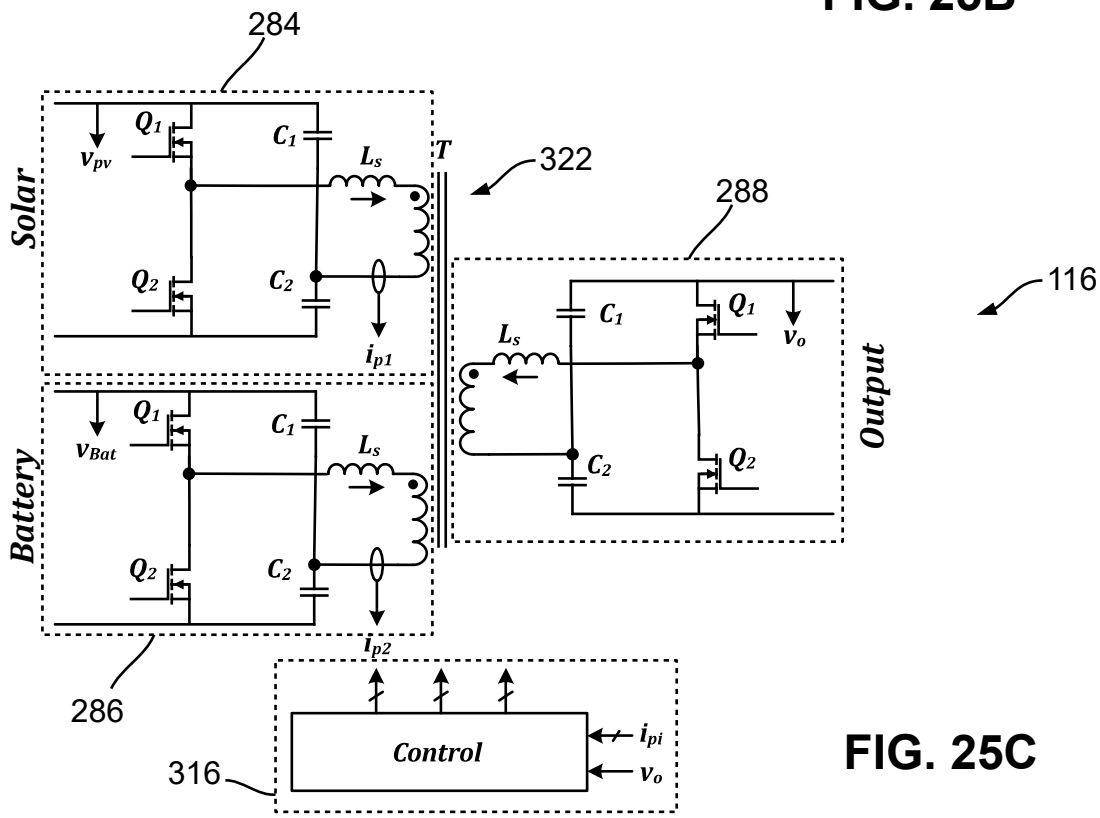

FIG. 25C

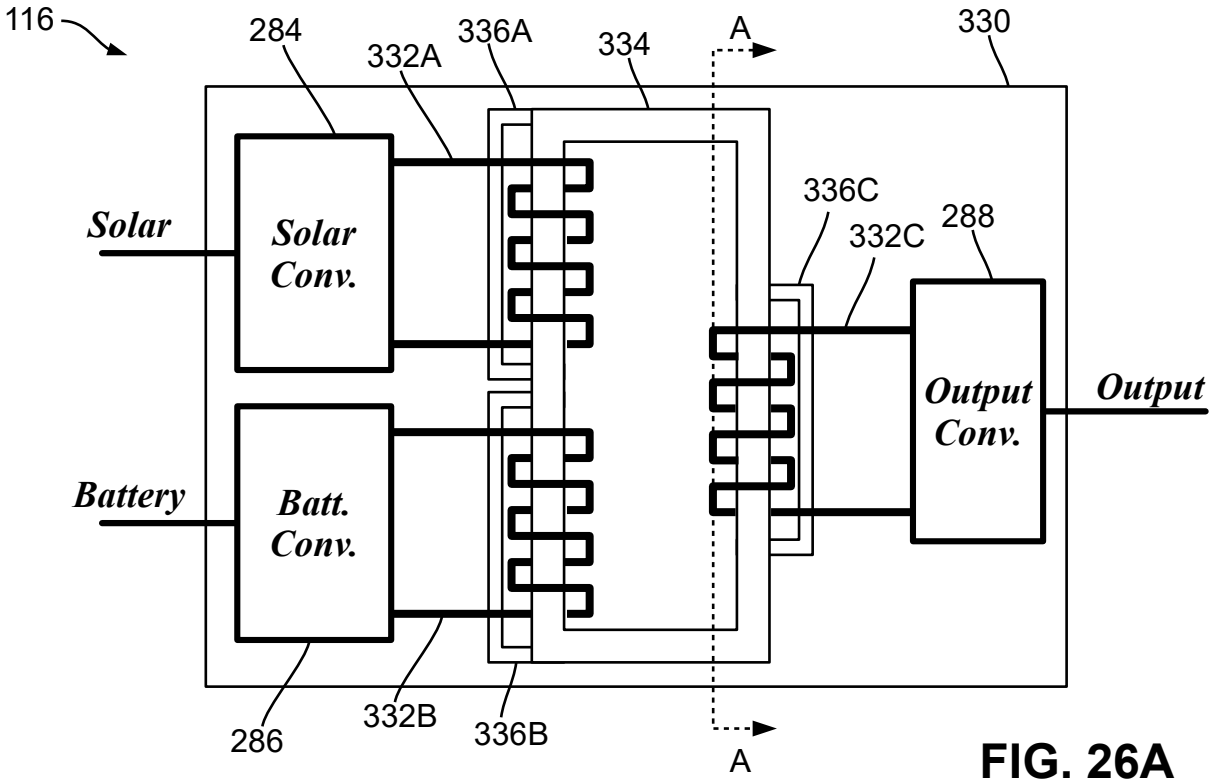

FIG. 26A

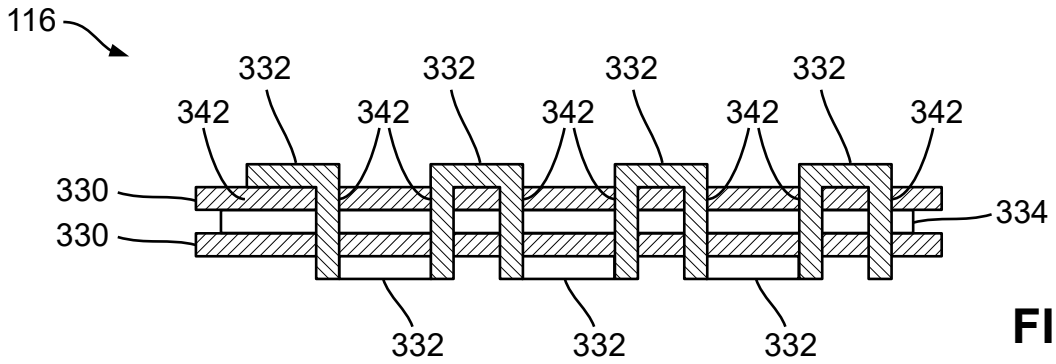

FIG. 26B

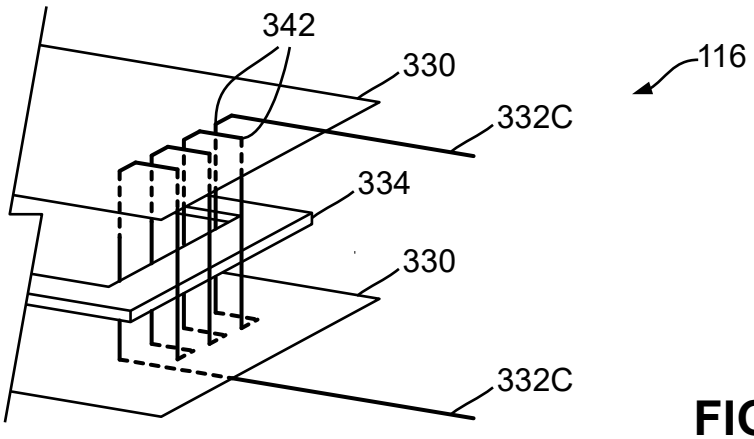

FIG. 26C

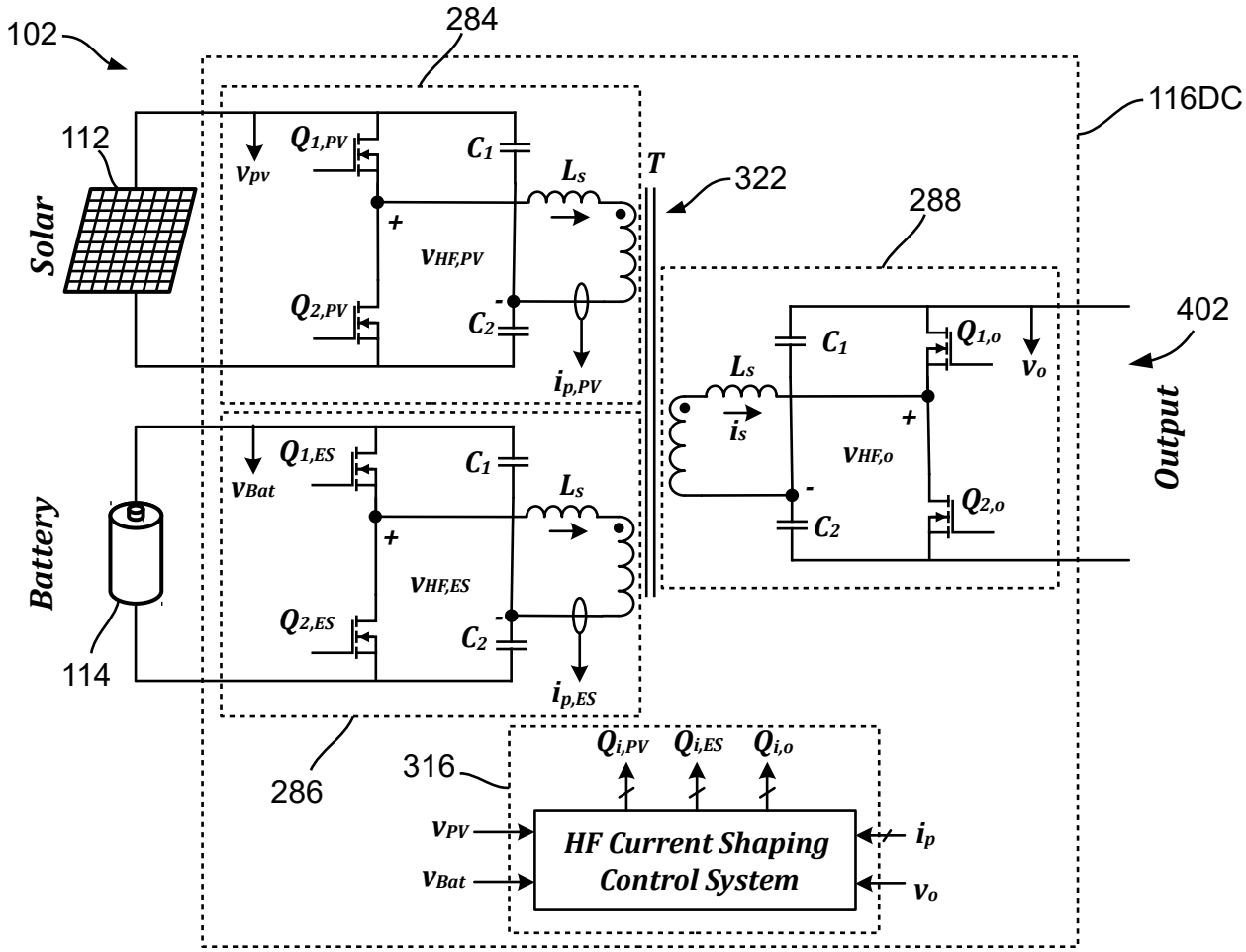
102
284
116DC
112
Solar
$Q_{1,PV}$
v_{pv}
C_1
L_s
T
322
288
+
$v_{HF,PV}$
$Q_{2,PV}$
C_2
-
$i_{p,PV}$
402
C_1
$Q_{1,o}$
v_o
L_s
i_s
+
$v_{HF,o}$
Output
$Q_{1,ES}$
v_{Bat}
C_1
L_s
+
$v_{HF,ES}$
Battery
$Q_{2,ES}$
C_2
-
$Q_{2,o}$
C_2
$i_{p,ES}$
114
286
316
$Q_{i,PV}$
$Q_{i,ES}$
$Q_{i,o}$
v_{PV}
v_{Bat}
HF Current Shaping Control System
i_p
v_o

FIG. 27

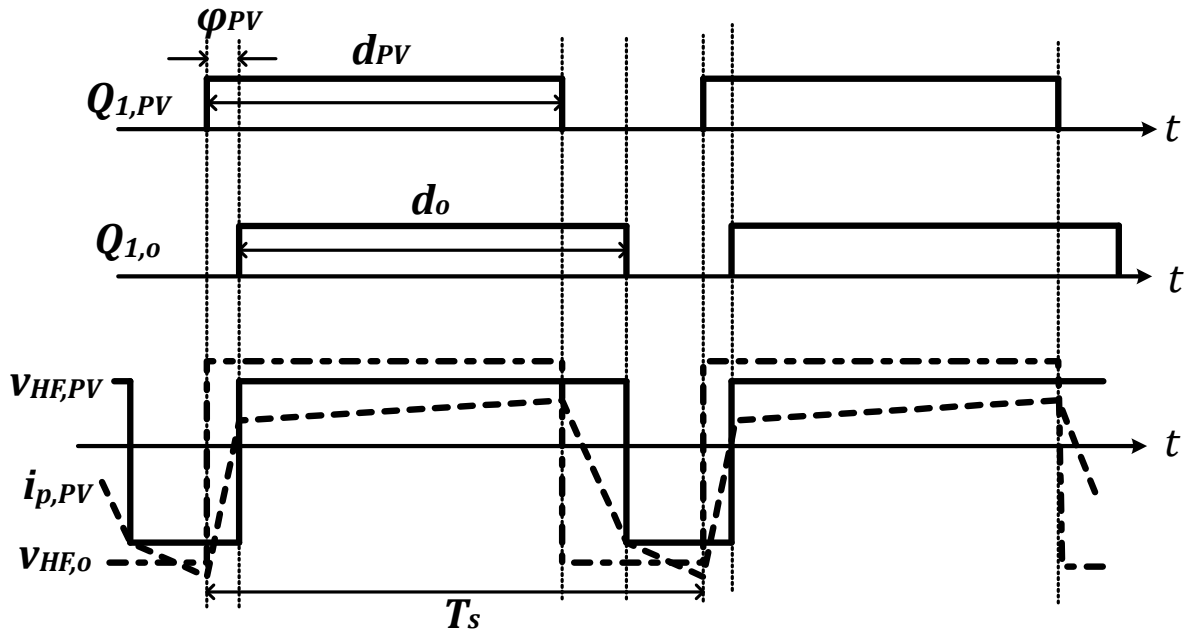
φPV
dPV
Q1,PV
t
do
Q1,o
t
vHF,PV
t
ip,PV
vHF,o
Ts

FIG. 28

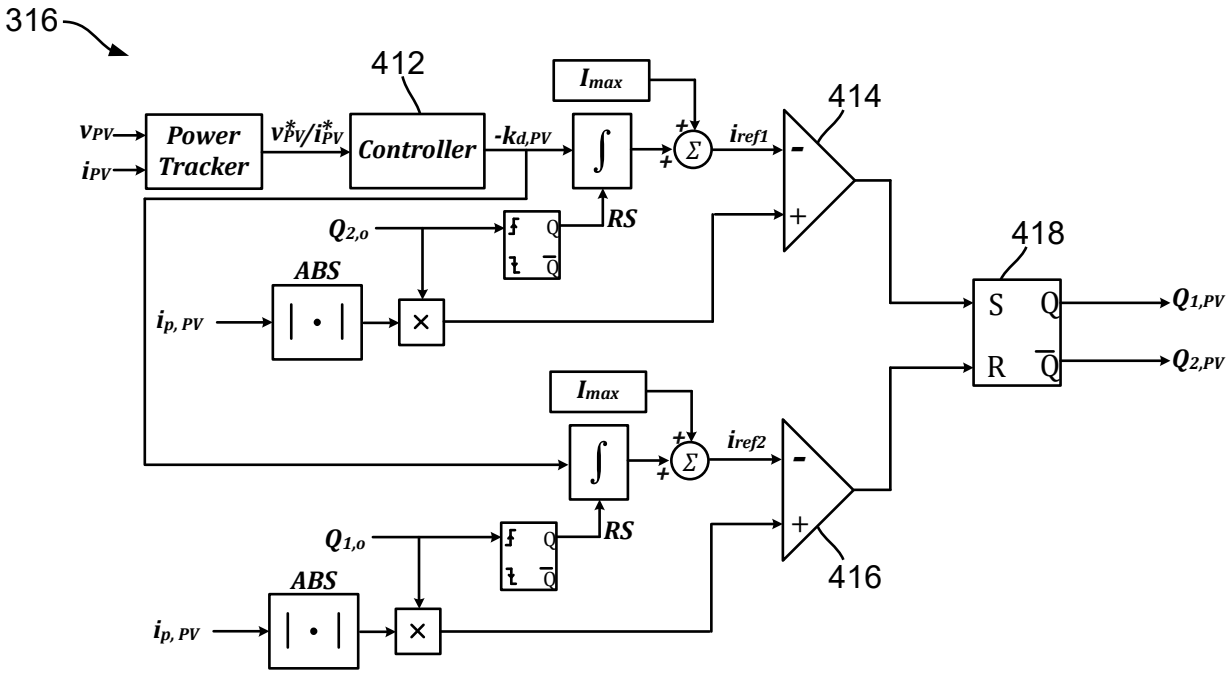
316
412
Imax
414
vPV
iPV
Power Tracker
v*PV/i*PV
Controller
-kd,PV
iref1
Q2,o
RS
ABS
ip, PV
418
Q1,PV
Q2,PV
Imax
iref2
Q1,o
RS
ABS
ip, PV
416

FIG. 29

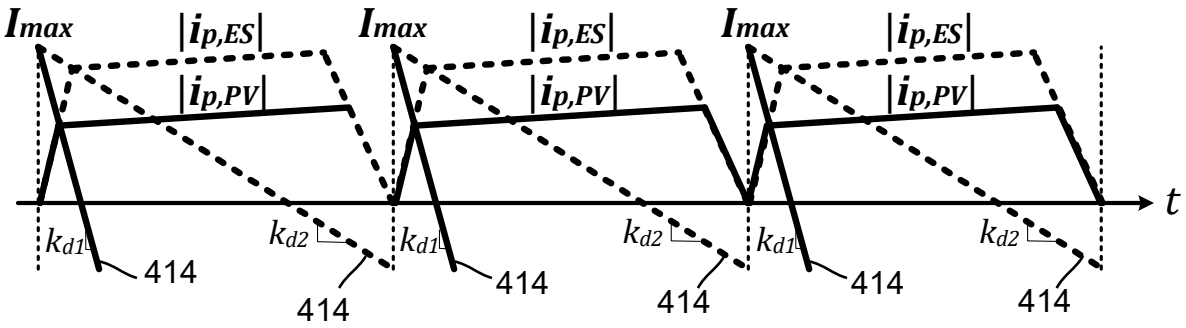
Imax
|ip,ES|
|ip,PV|
Imax
|ip,ES|
|ip,PV|
Imax
|ip,ES|
|ip,PV|
t
kd1
kd2
414
kd1
kd2
414
kd1
kd2
414
kd1
kd2
414

FIG. 30

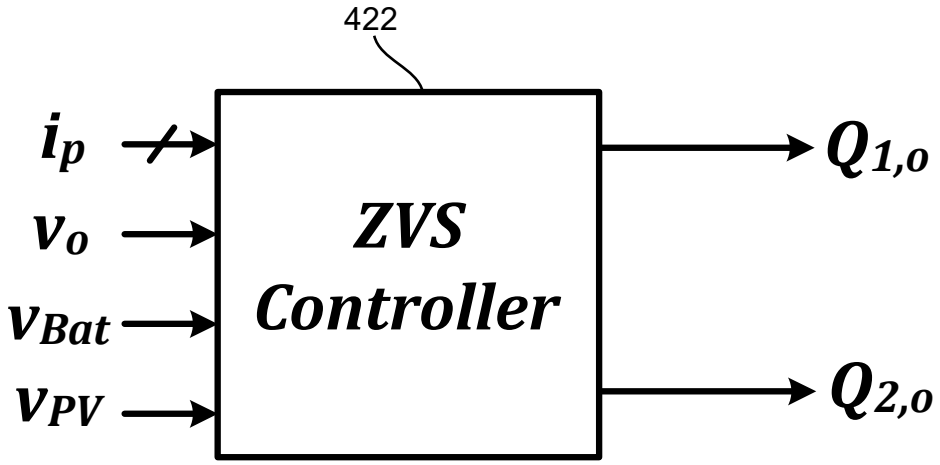
422
ip
vo
vBat
vPV
ZVS
Controller
Q1,o
Q2,o

FIG. 31

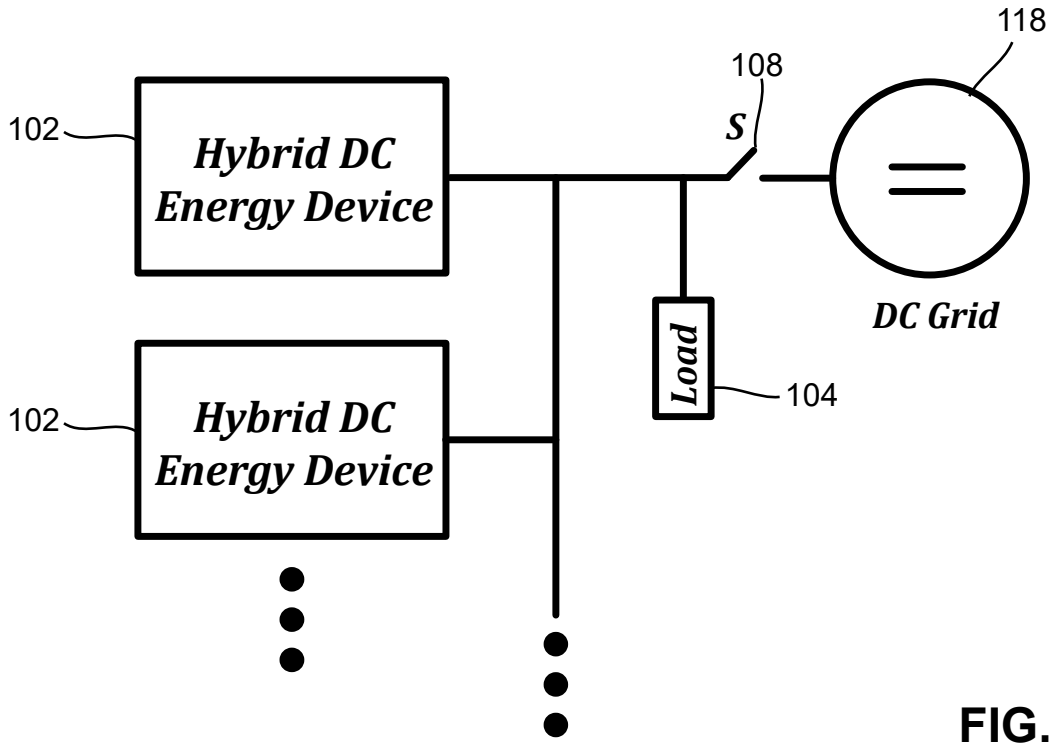
118
108
S
102
Hybrid DC Energy Device
102
Hybrid DC Energy Device
Load
104
DC Grid

FIG. 32

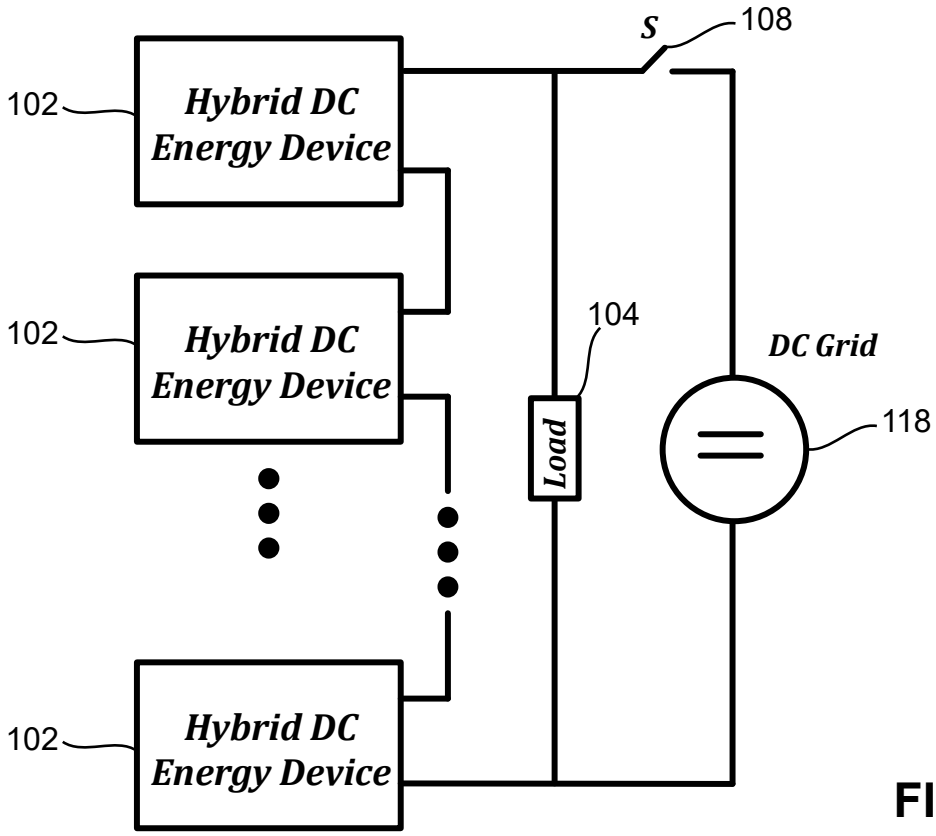
S
108
102
Hybrid DC Energy Device
102
Hybrid DC Energy Device
102
Hybrid DC Energy Device
104
Load
DC Grid
118

FIG. 33

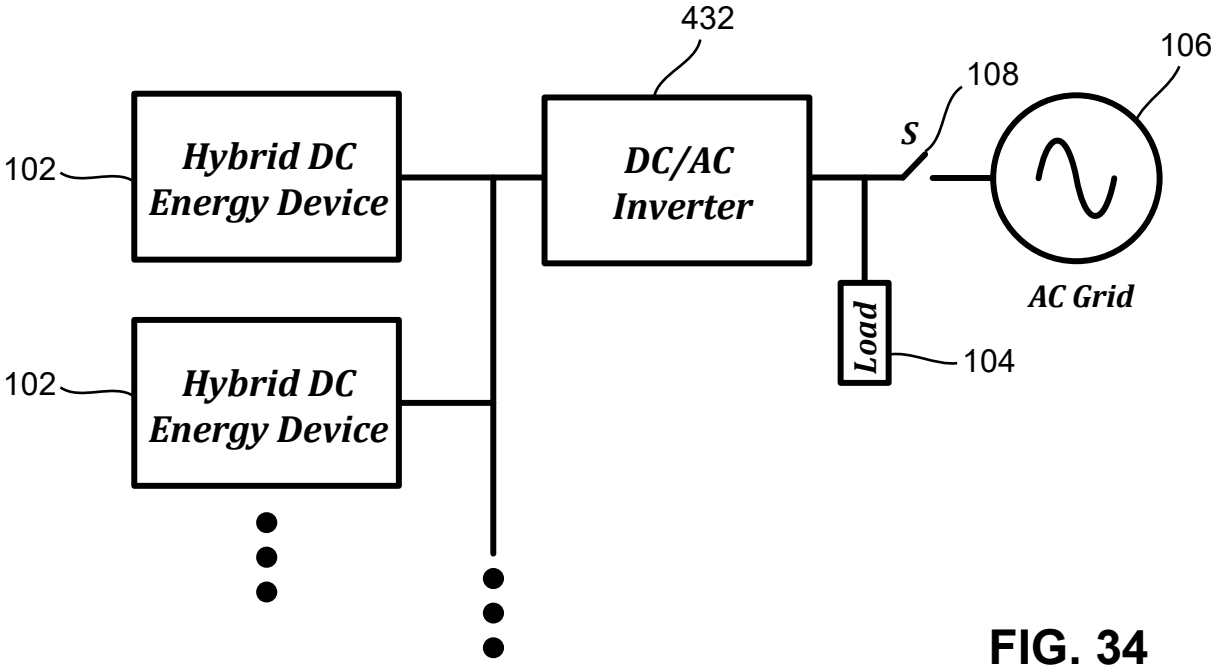
432
106
108
S
102
Hybrid DC Energy Device
DC/AC Inverter
AC Grid
Load
104
102
Hybrid DC Energy Device

FIG. 34

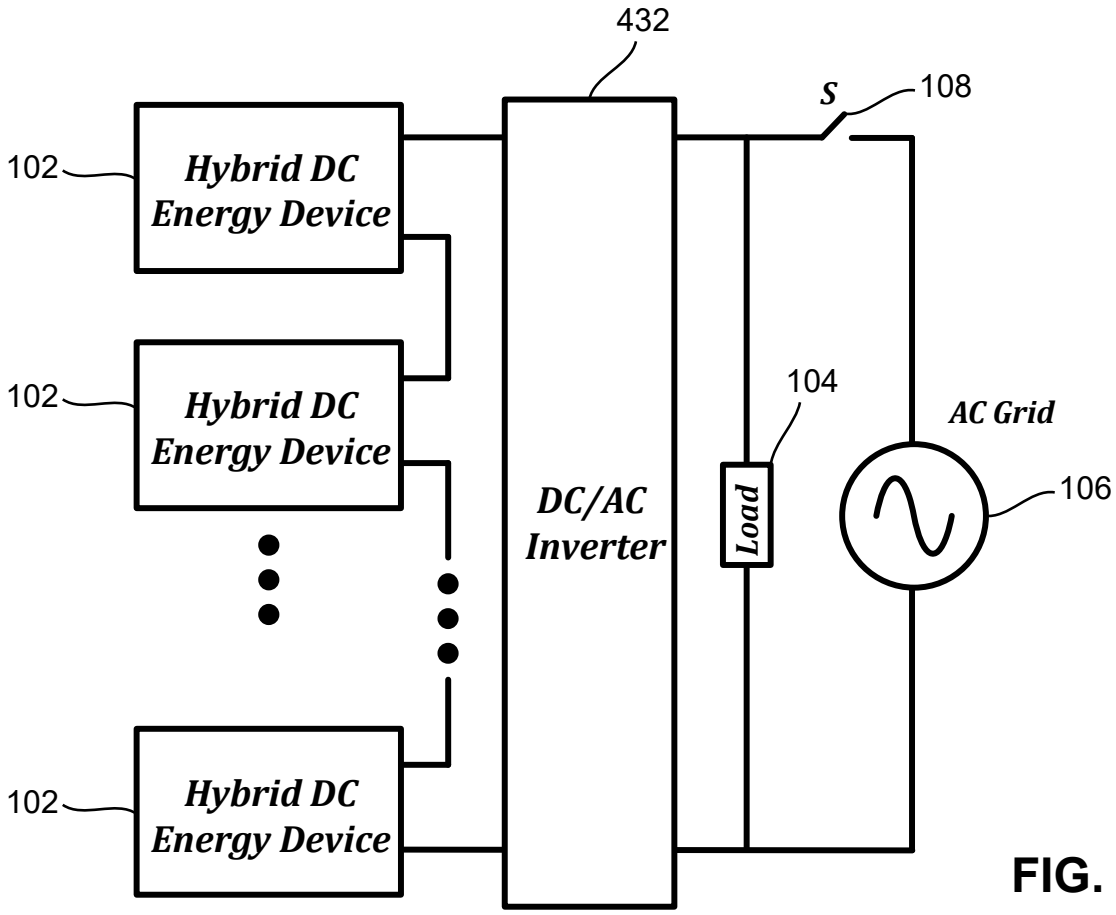
432
S
108
102
Hybrid DC Energy Device
102
Hybrid DC Energy Device
104
AC Grid
DC/AC Inverter
Load
106
102
Hybrid DC Energy Device

FIG. 35

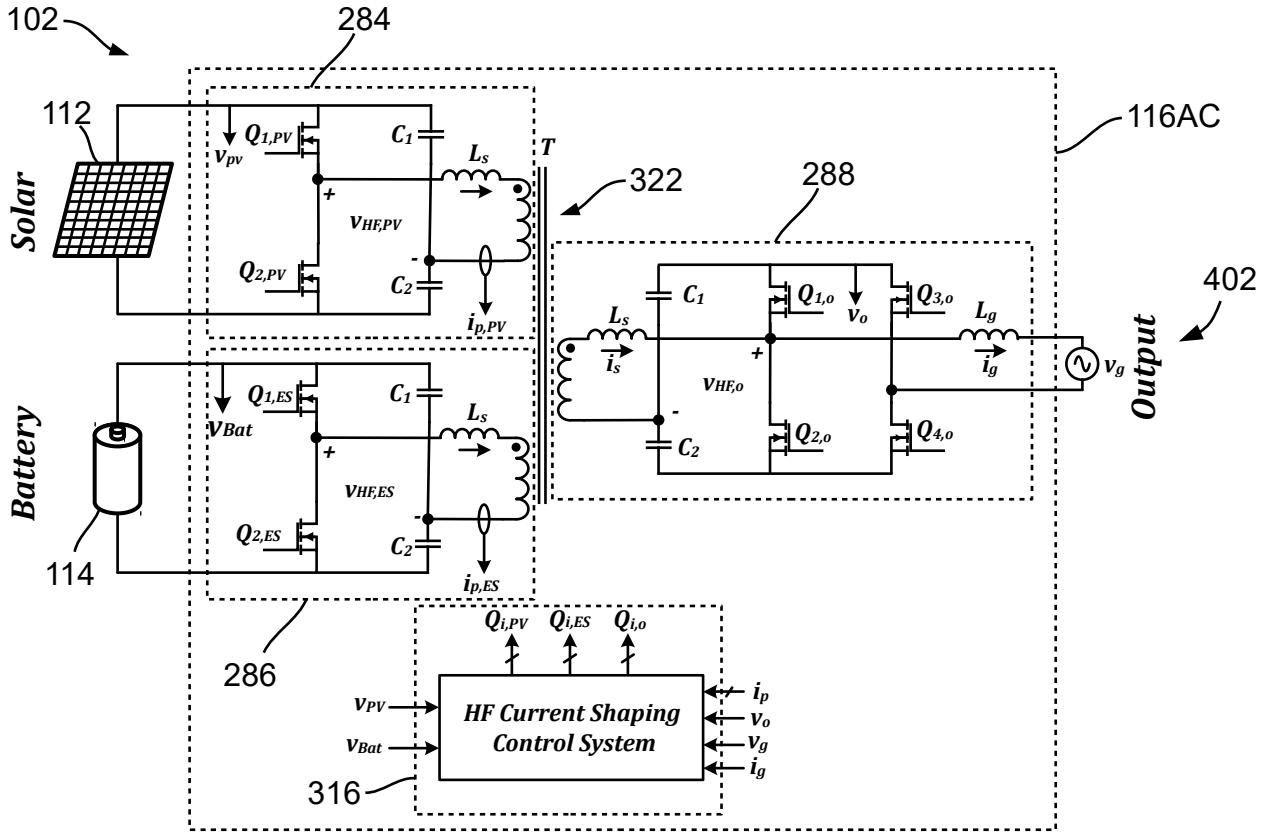
102
284
112
116AC
Solar
$Q_{1,PV}$
C_1
L_s
T
322
288
v_{pv}
$v_{HF,PV}$
$Q_{2,PV}$
C_2
$i_{p,PV}$
L_s
C_1
$Q_{1,o}$
v_o
$Q_{3,o}$
L_g
402
i_s
$v_{HF,o}$
i_g
v_g
Output
Battery
$Q_{1,ES}$
C_1
L_s
v_{Bat}
$v_{HF,ES}$
$Q_{2,ES}$
C_2
$i_{p,ES}$
C_2
$Q_{2,o}$
$Q_{4,o}$
114
286
$Q_{i,PV}$
$Q_{i,ES}$
$Q_{i,o}$
v_{PV}
v_{Bat}
HF Current Shaping Control System
i_p
v_o
v_g
i_g
316

FIG. 36

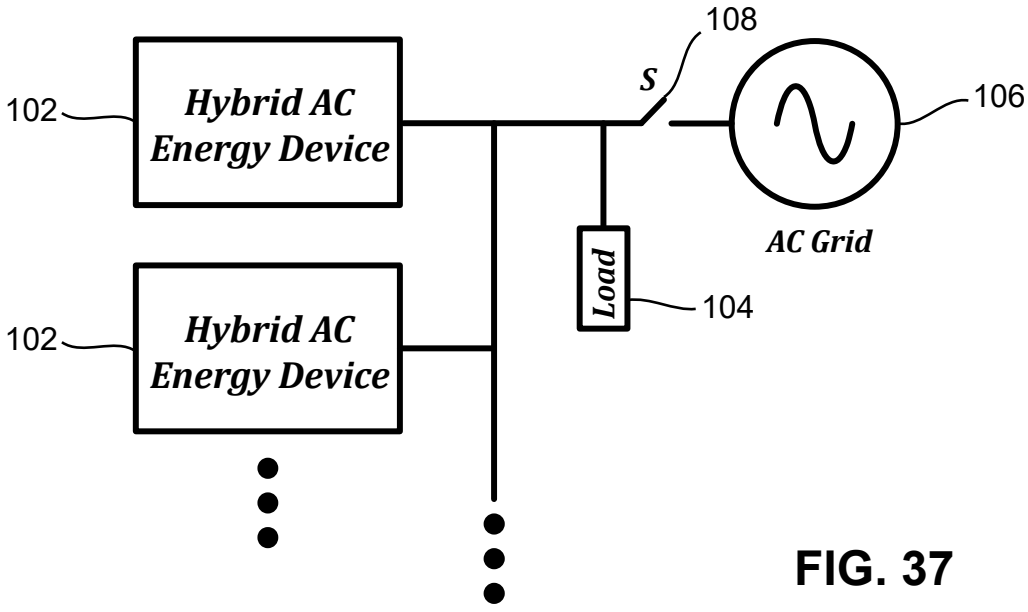
108
S
102
Hybrid AC Energy Device
106
AC Grid
Load
104
102
Hybrid AC Energy Device

FIG. 37

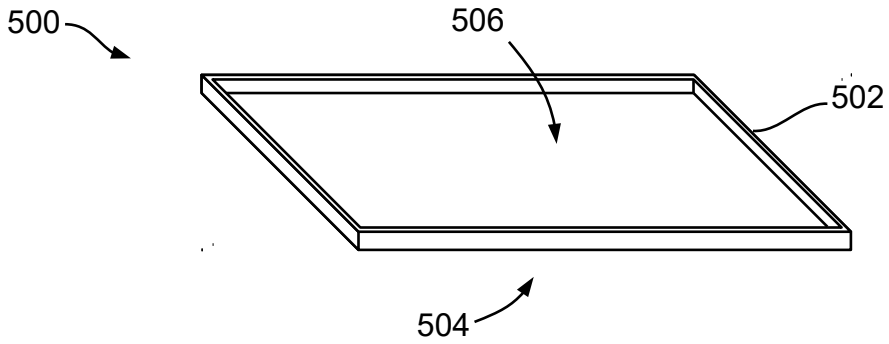

FIG. 38

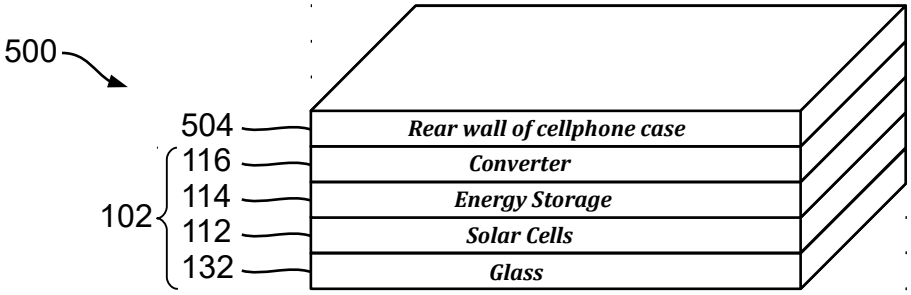

FIG. 39

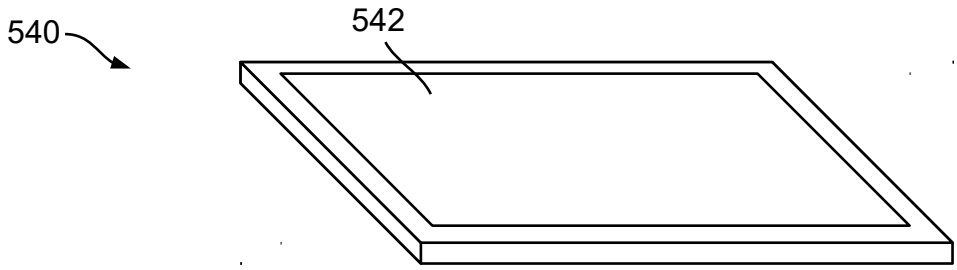

FIG. 40

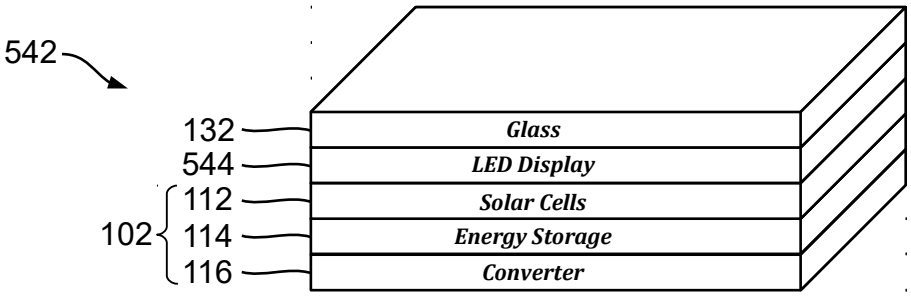

FIG. 41

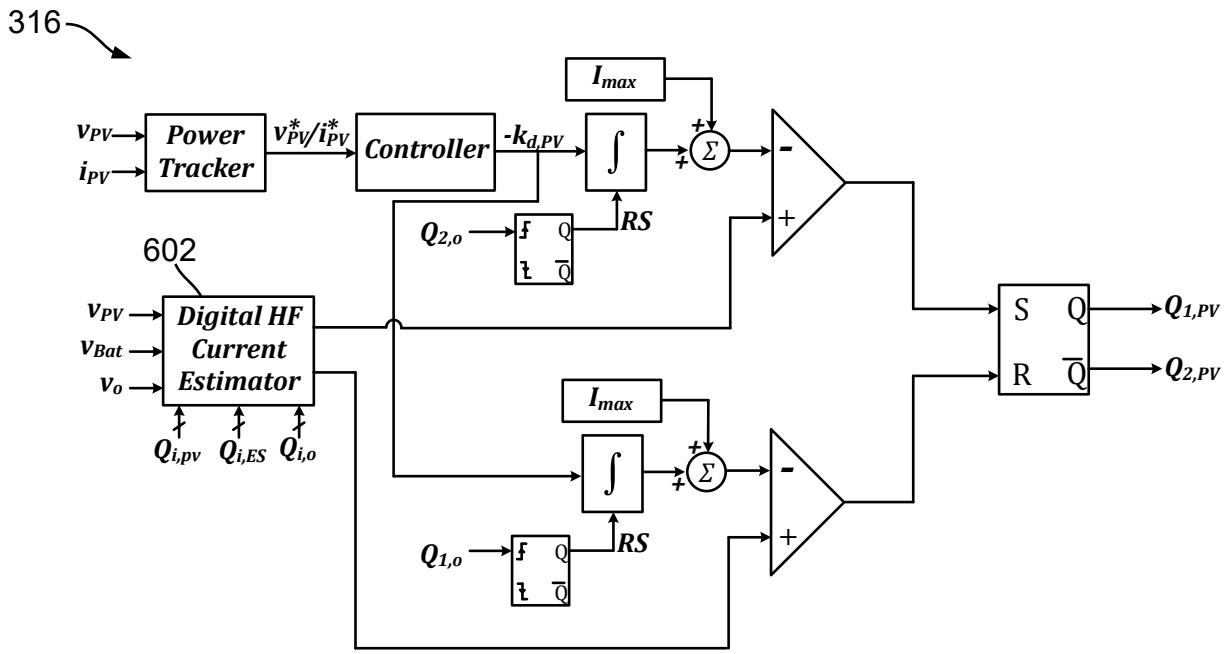
316
I_{max}
v_{PV}
i_{PV}
Power Tracker
v^*_{PV}/i^*_{PV}
Controller
$-k_{d,PV}$
$\int$
Σ
$Q_{2,o}$
RS
602
v_{PV}
v_{Bat}
v_o
Digital HF Current Estimator
$Q_{i,pv}$
$Q_{i,ES}$
$Q_{i,o}$
I_{max}
$Q_{1,o}$
RS
S Q
R $\overline{Q}$
$Q_{1,PV}$
$Q_{2,PV}$

FIG. 42

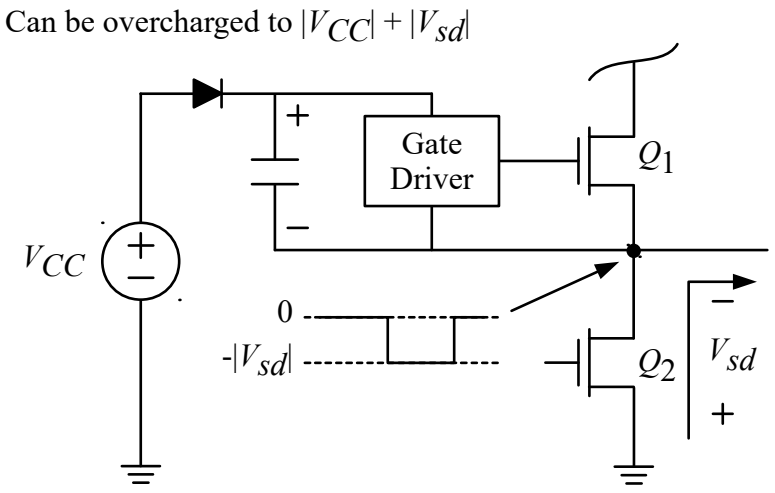
Can be overcharged to $|V_{CC}| + |V_{sd}|$
Gate Driver
Q_1
Q_2
V_{CC}
0
$-|V_{sd}|$
V_{sd}

FIG. 43

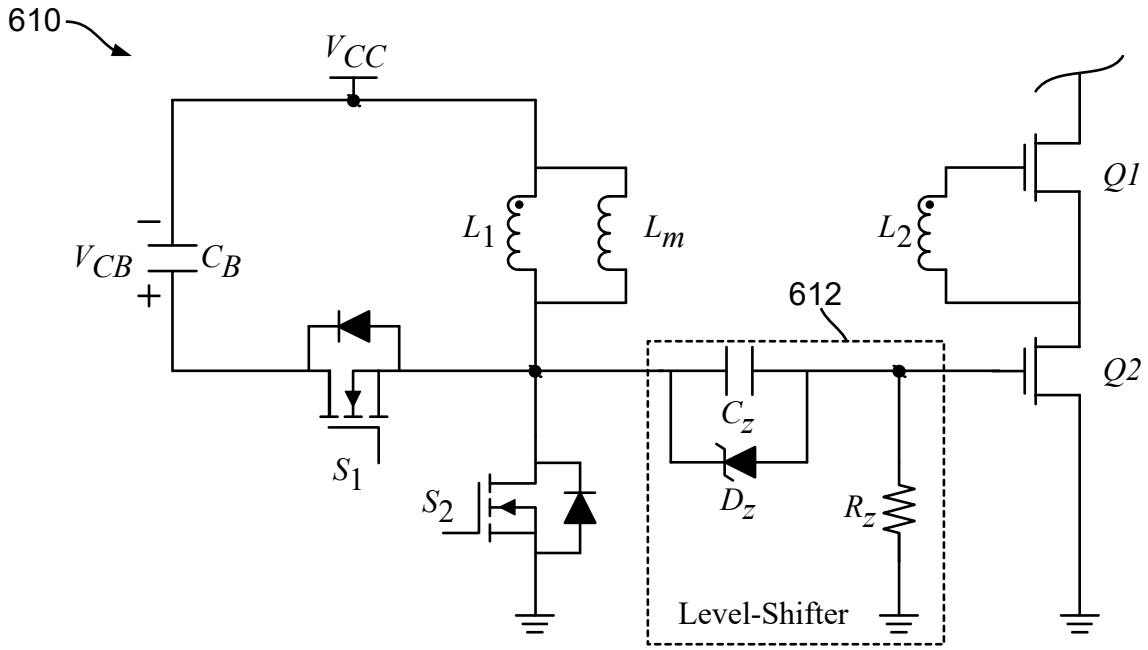
610
V_{CC}
V_{CB}
C_B
L_1
L_m
L_2
Q1
612
Q2
C_z
S_1
S_2
D_z
R_z
Level-Shifter

FIG. 44

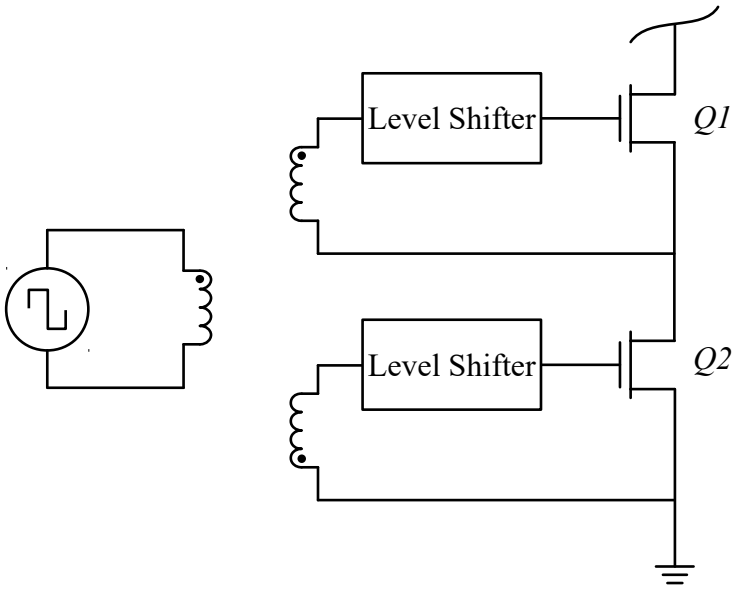
Level Shifter
Q1
Level Shifter
Q2

FIG. 45

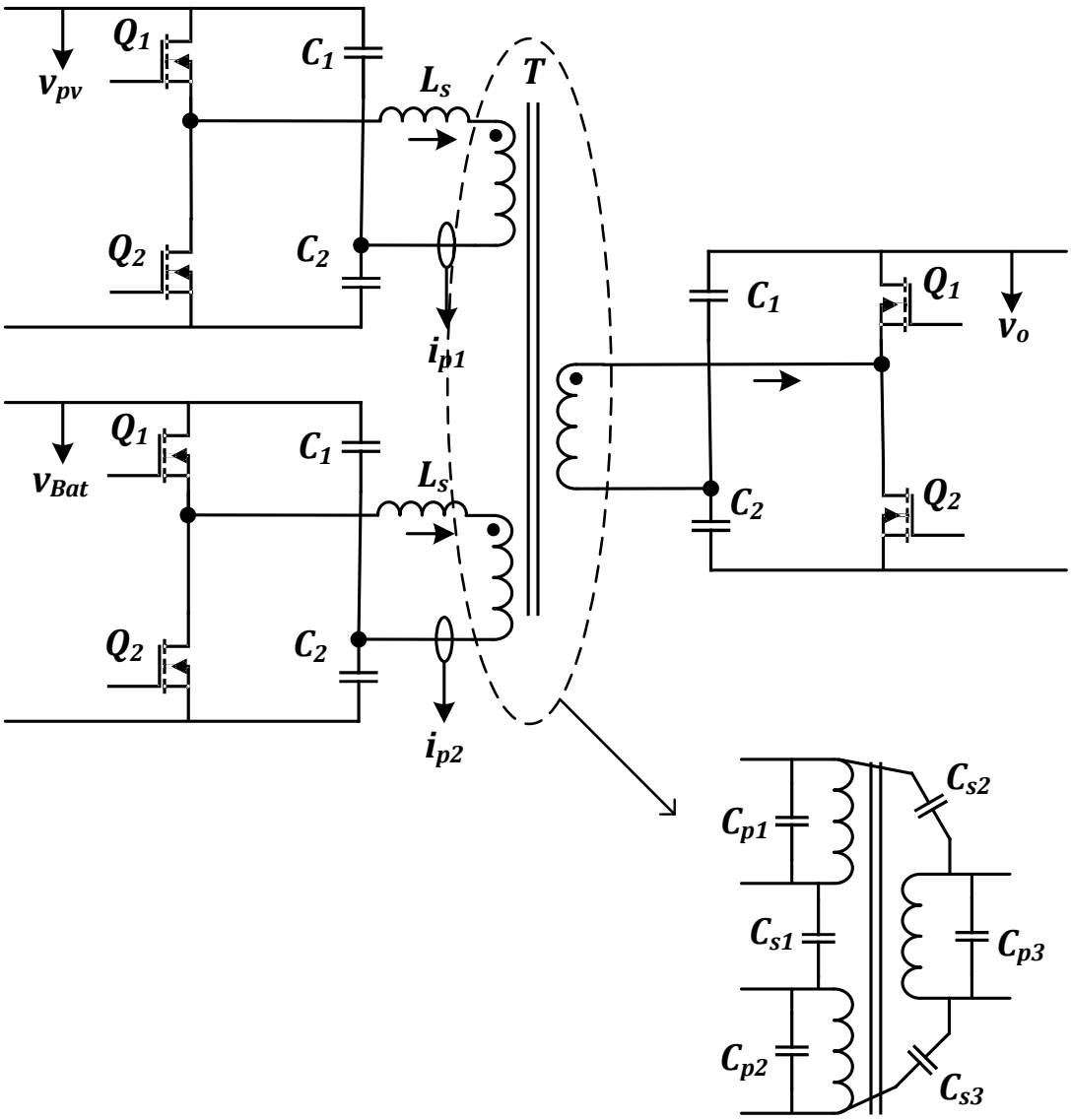
Q_1
C_1
L_s
T
v_{pv}
Q_2
C_2
i_{p1}
Q_1
C_1
v_o
v_{Bat}
L_s
C_2
Q_2
Q_1
C_1
Q_2
C_2
i_{p2}
C_{s2}
C_{p1}
C_{s1}
C_{p3}
C_{p2}
C_{s3}

FIG. 46

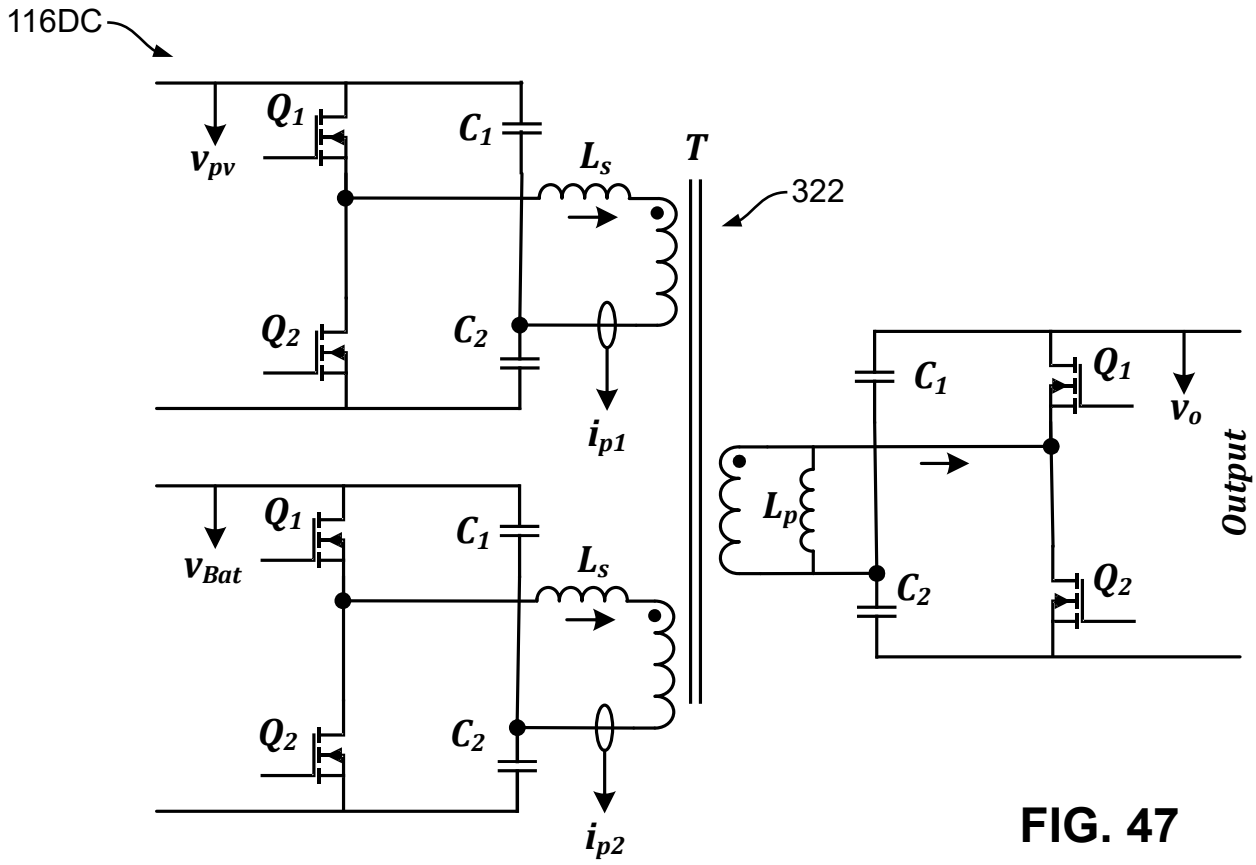
116DC
Q_1
C_1
L_s
T
322
v_{pv}
Q_2
C_2
i_{p1}
Q_1
C_1
v_o
L_p
Output
C_2
Q_2
Q_1
C_1
v_{Bat}
L_s
Q_2
C_2
i_{p2}

FIG. 47

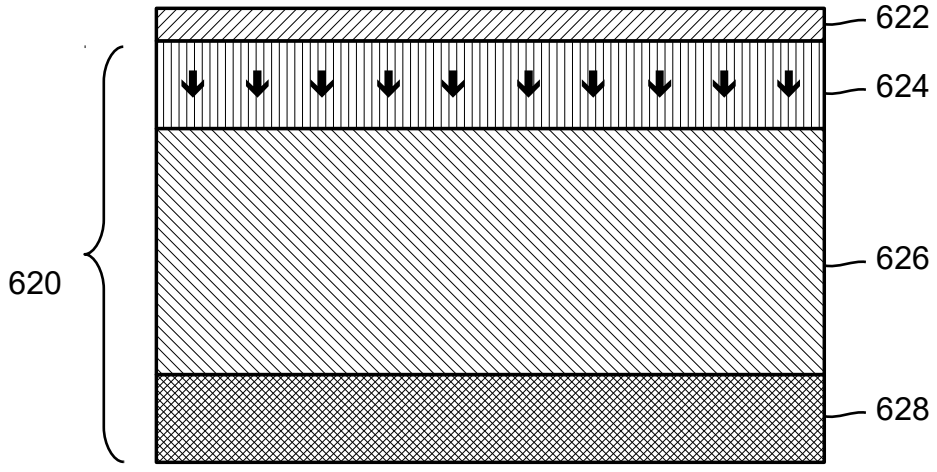
622
624
620
626
628

FIG. 48

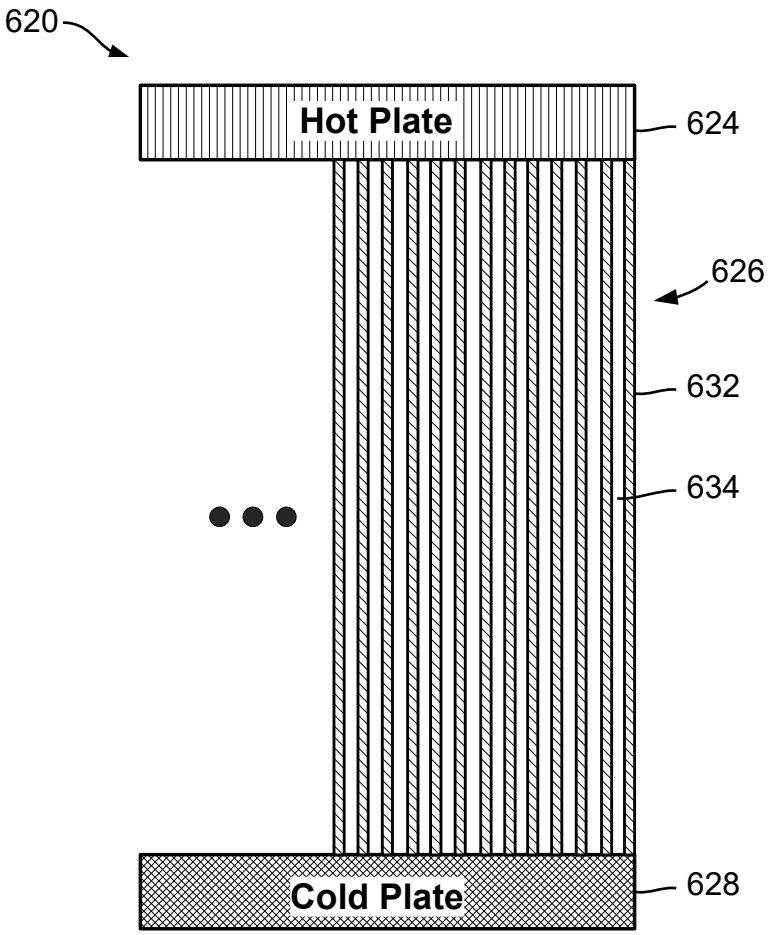

FIG. 49A

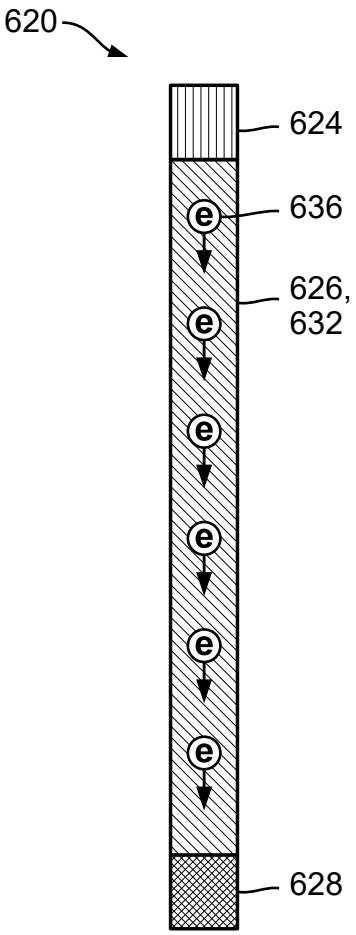

FIG. 49B

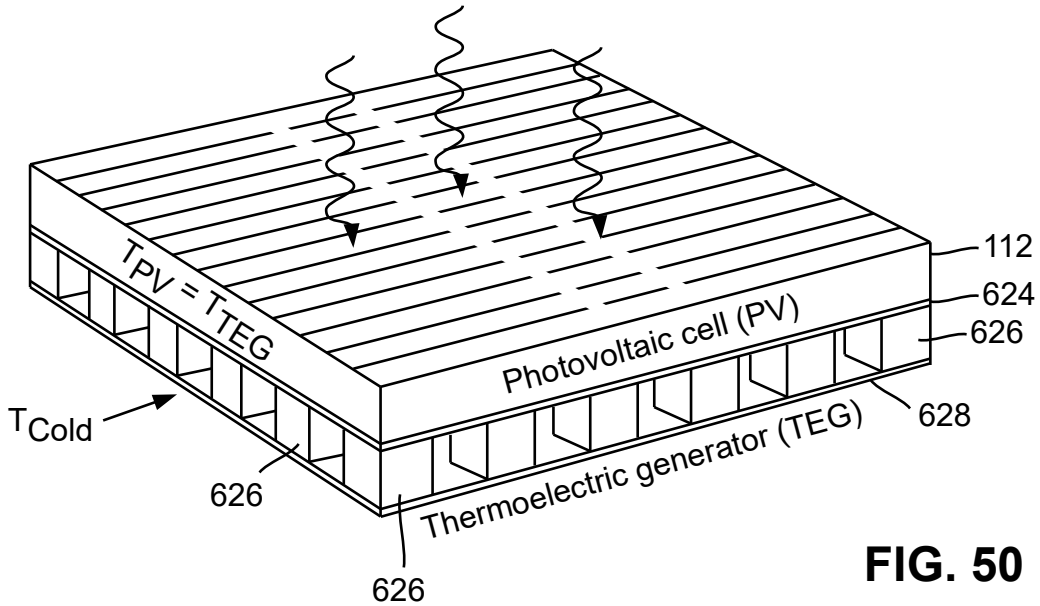

FIG. 50

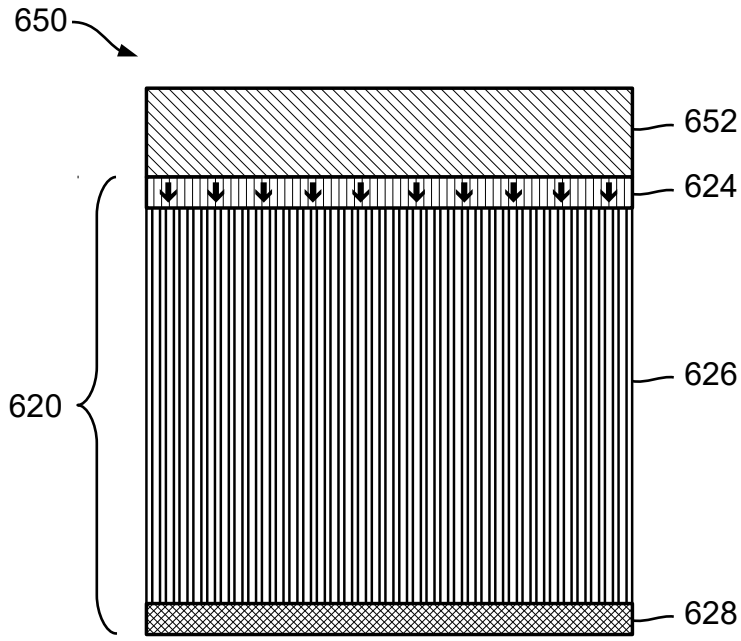

FIG. 51A

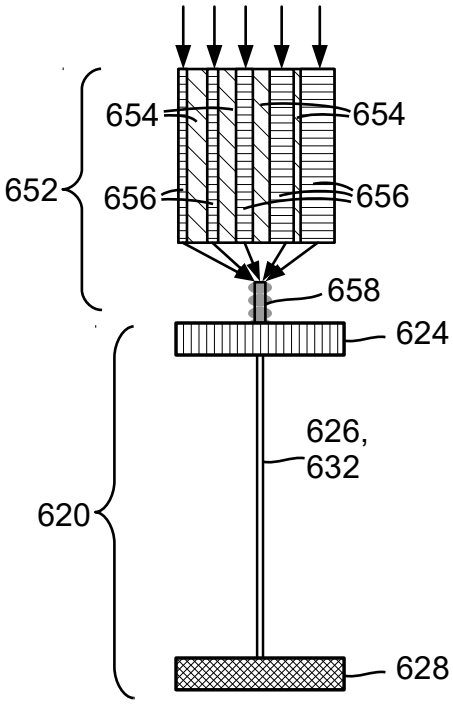

FIG. 51B

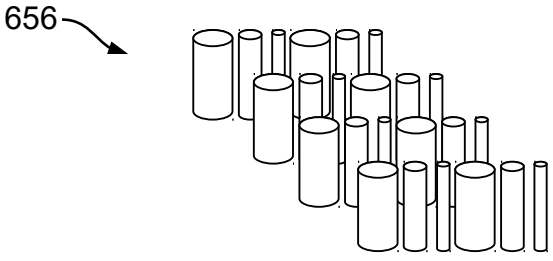

FIG. 51C

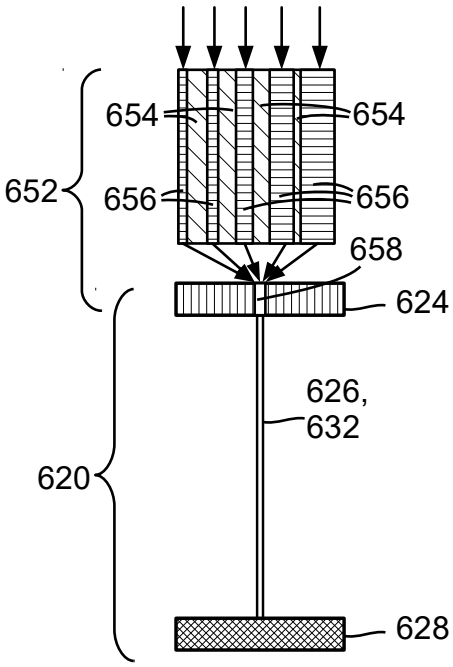

FIG. 51D

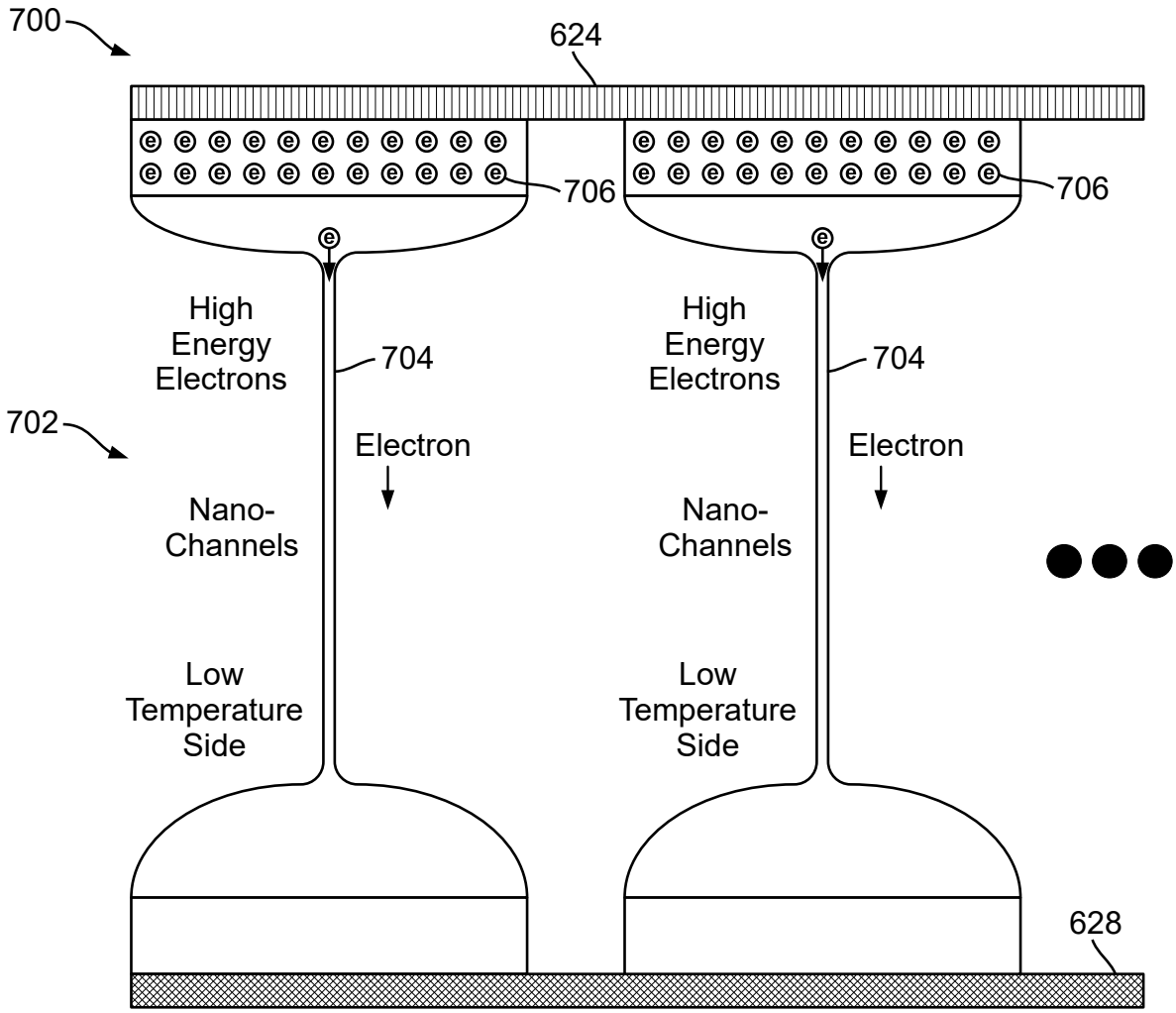
700
624
706
706
High Energy Electrons
High Energy Electrons
704
704
702
Electron
Electron
Nano-Channels
Nano-Channels
Low Temperature Side
Low Temperature Side
628

FIG. 52

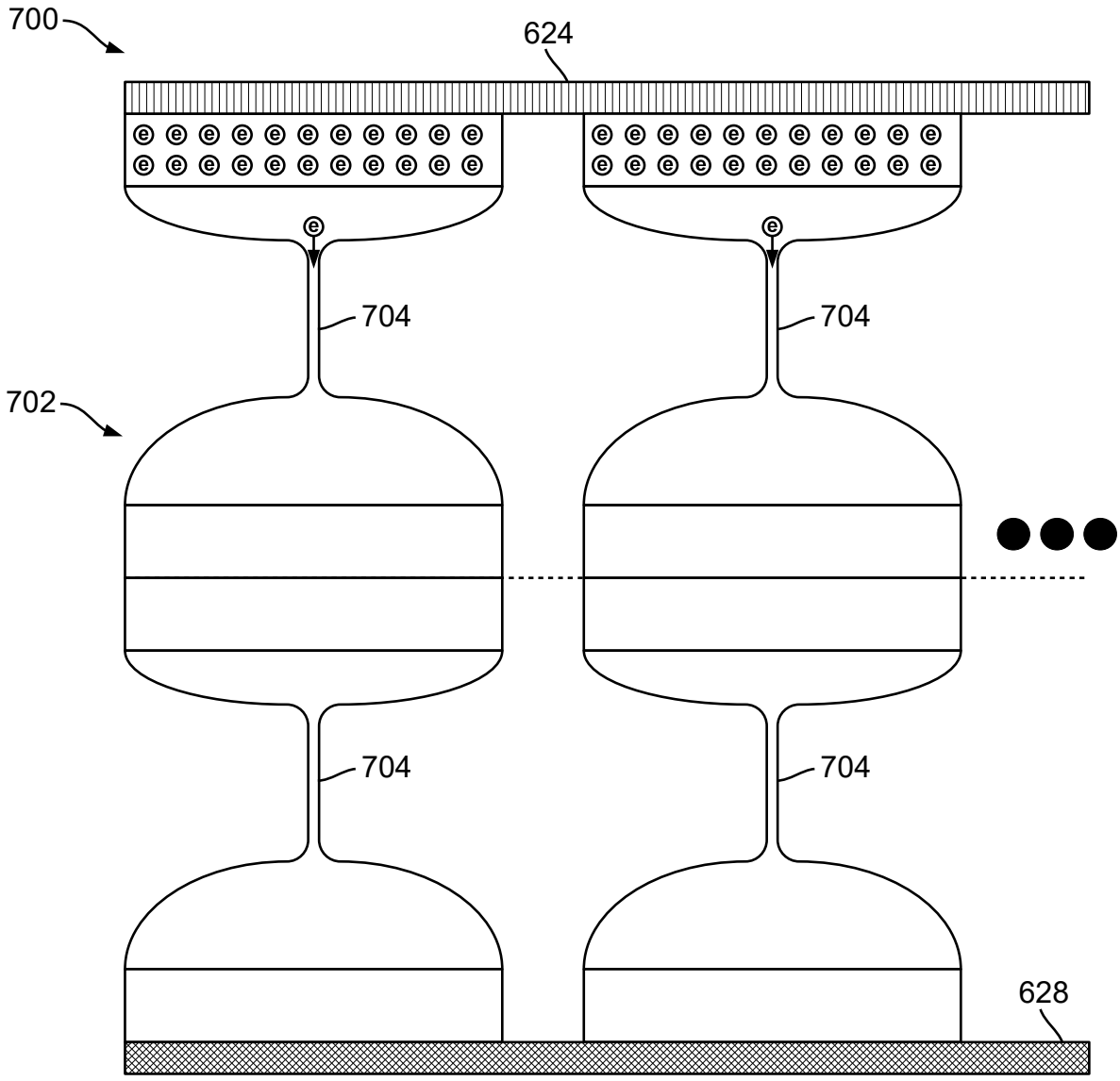

FIG. 53

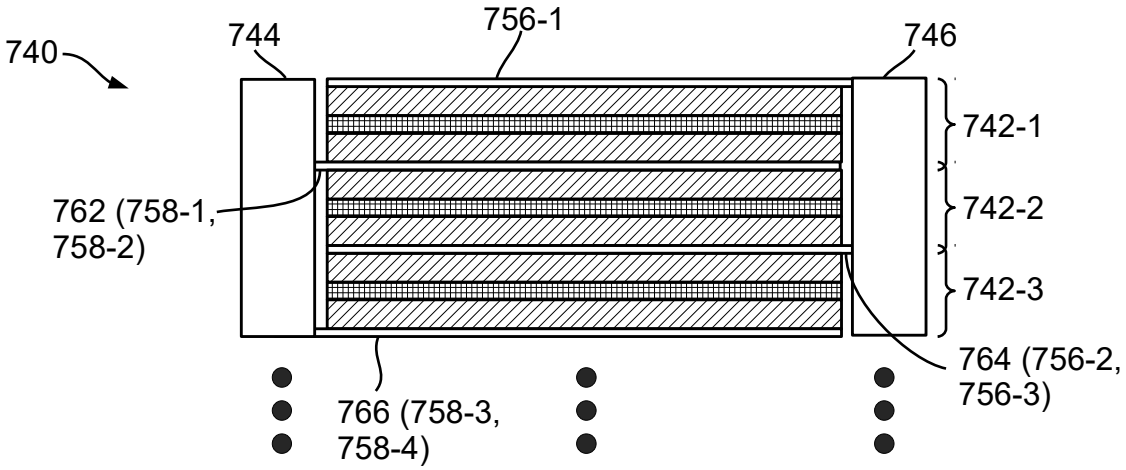

FIG. 54A

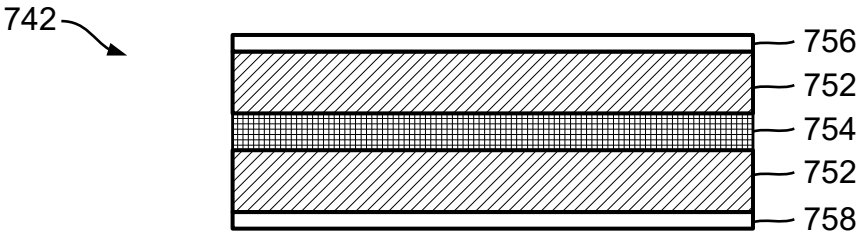

FIG. 54B

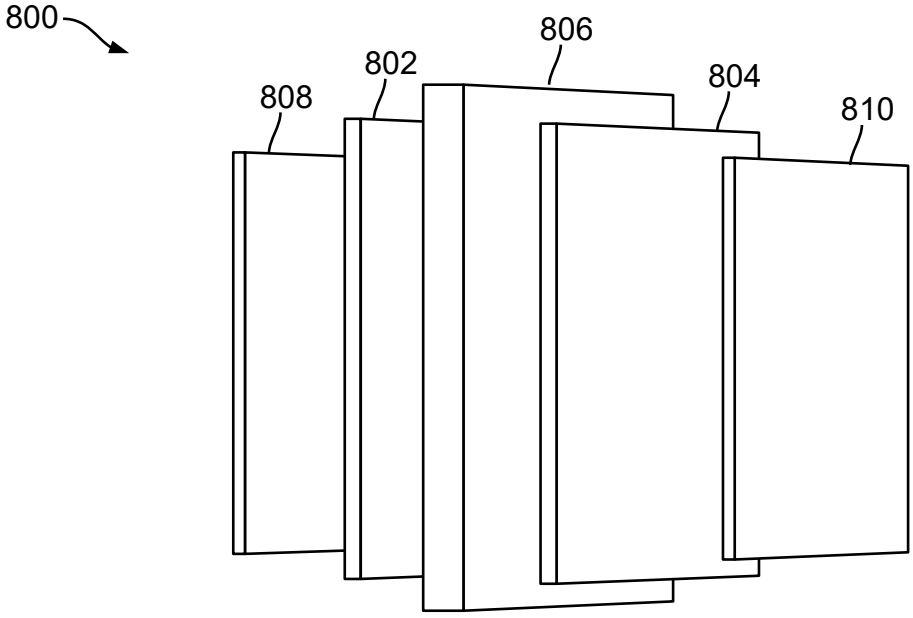

FIG. 55

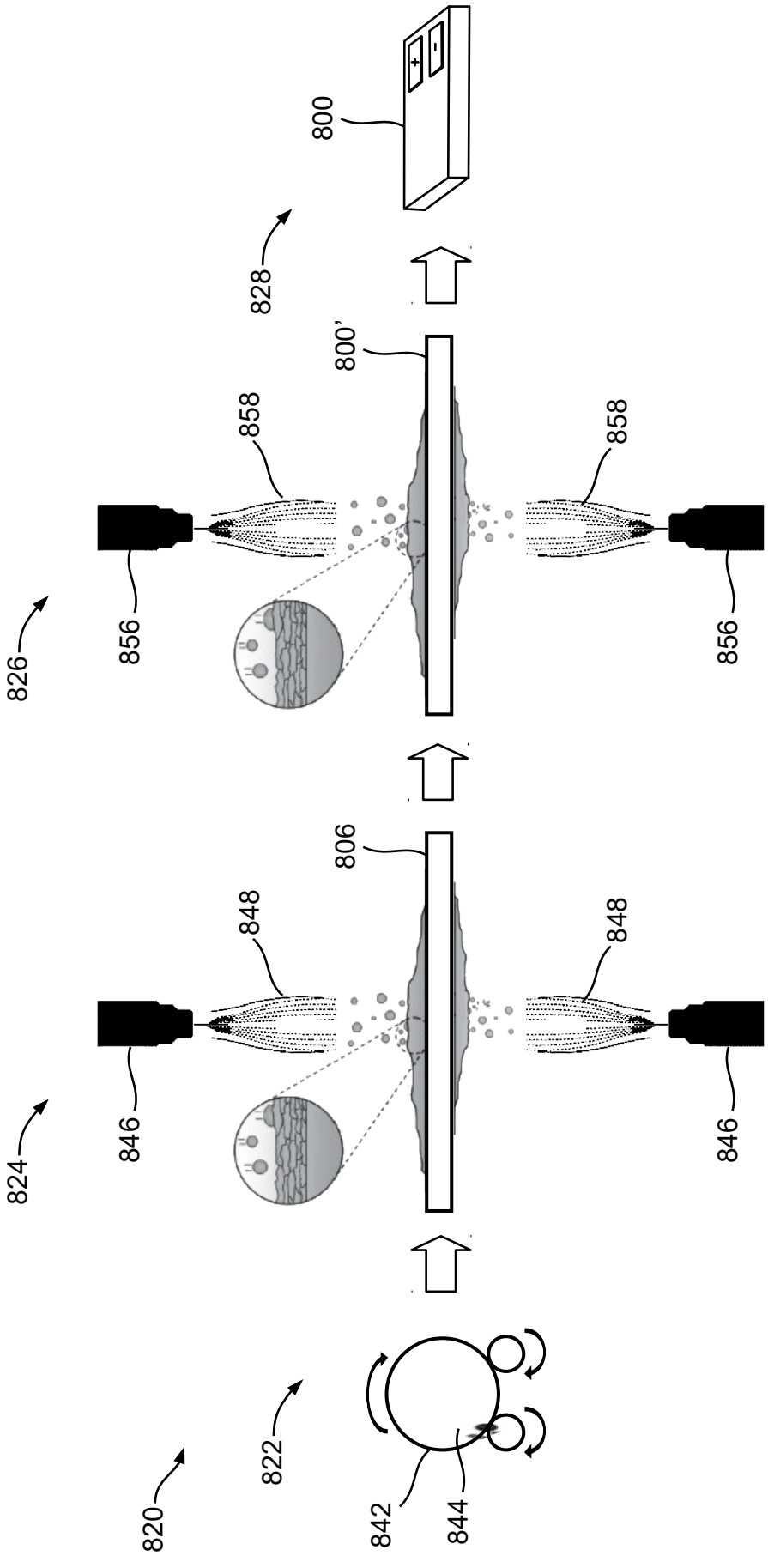
800
828
800'
858
858
826
856
856
806
848
848
824
846
846
822
820
842
844

FIG. 56

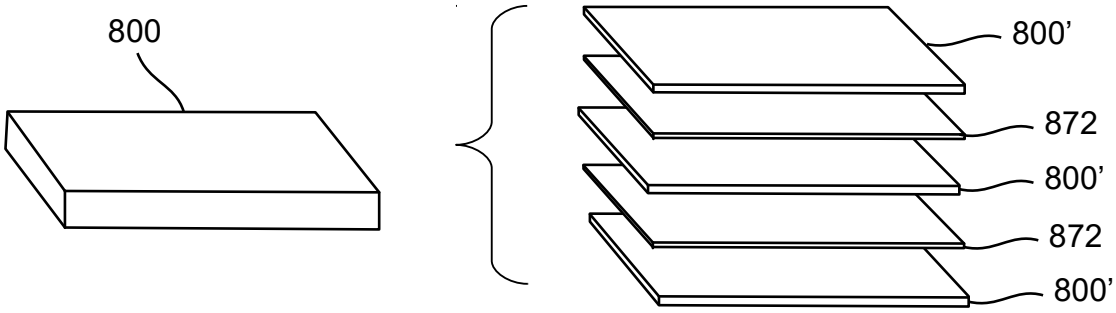

FIG. 57