(12) INTERNATIONAL APPLICATION PUBLISHED UNDER THE PATENT COOPERATION TREATY (PCT)

(19) World Intellectual Property Organization
International Bureau

162162

(43) International publication date
30 September 2004 (30.09.2004)

PCT

(10) International publication number
WO 2004/083766 A1

(51) International patent classification[7]: F41A 23/26

(21) International application number: PCT/EP2004/050330

(22) International filing date: 18 March 2004 (18.03.2004)

(25) Language of filing: French

(26) Language of publication: French

(30) Data relating to the priority:
03/03,512 21 March 2003 (21.03.2003) FR

(71) Applicant *(for all designated States except US)*: **TDA ARMEMENTS S.A.S** [FR/FR]; Route D'Ardon, F-45240 La Ferté Saint Aubin (FR).

(72) Inventors; and

(75) Inventors/Applicants *(US only)*: **DENIS, Jean-François** [FR/FR]; Thales Intellectual Property, 31-33, avenue Aristide Briand, F-94117 Arcueil (FR). **BEAUJARD, André** [FR/FR]; Thales Intellectual Property, 31-33, avenue Aristide Briand, F-94117 Arcueil (FR). **COHE, Patrick** [FR/FR]; Thales Intellectual Property, 31-33, avenue Aristide Briand, F-94117 Arcueil (FR).

(74) Representatives: **CHAPEROT, Ivan** etc.; Thales Intellectual Property, 31-33, avenue Aristide Briand, F-94117 Arcueil (FR).

(81) Designated states *(unless otherwise indicated, for every kind of national protection available)*: AE, AG, AL, AM, AT, AU, AZ, BA, BB, BG, BR, BW, BY, BZ,

[continued on next page]

As printed

(54) Title: DEVICE FOR TRANSPORTING A MORTAR-TYPE HEAVY WEAPON ON A LIGHT ALL-TERRAIN VEHICLE

(54) Titre : DISPOSITIF POUR LE TRANSPORT D'UNE ARME LOURDE DE TYPE MORTIER AVEC UN VÉHICULE LÉGER TOUT TERRAIN

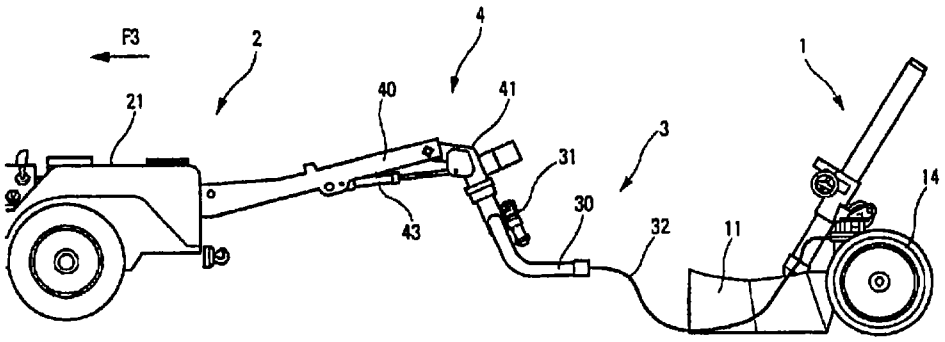

(57) Abstract: The invention relates to techniques used to transport artillery-type autonomous weapons, such as cannons or mortars. The invention can be used to transport a heavy weapon on the rear deck of a light all-terrain vehicle. The interface (3, 4) between the vehicle (2) and the weapon (1) comprises a retractable structure (3), e.g. a fork crane (30), a cable (32) and an electrical winch (31). When retracted, the retractable structure is designed to form a mechanical connection between the vehicle and the weapon, and, when released, said structure is configured to enable the weapon to move in relation to the vehicle, such that the stresses produced with the launch of a missile are not transmitted to the vehicle. Moreover, when the retractable structure is in the released position, the weapon can be moved away from the vehicle while remaining connected thereto and, in the retracted position, the structure can be used to position the weapon precisely on the vehicle.

(57) Abrégé : L'invention concerne les techniques de transport d'arme autonome du type artillerie, telle que canon ou mortier. Elle permet notamment de transporter une arme lourde sur le plateau arrière (21) d'un véhicule léger tout terrain. L'interface (3, 4) entre le véhicule (2) et l'arme (1) comprend une structure rétractable (3), par exemple un portique à fourche (30), un câble (32) et un treuil électrique (31). La structure rétractable est destinée à former une liaison mécanique entre le véhicule et l'arme lorsqu'elle est rétractée. Elle est configurée pour autoriser un débattement de l'arme par rapport au véhicule lorsqu'elle est détendue, de sorte que les sollicitations au départ d'un projectile ne soient pas transmises au véhicule. La structure

WO 2004/083766 A1

[continued on next page]

G00002

CA, CH, CN, CO, CR, CU, CZ, DE, DK, DM, DZ, EC, EE, EG, ES, FI, GB, GD, GE, GH, GM, HR, HU, ID, IL, IN, IS, JP, KE, KG, KP, KR, KZ, LC, LK, LR, LS, LT, LU, LV, MA, MD, MG, MK, MN, MW, MX, MZ, NA, NI, NO, NZ, OM, PG, PH, PL, PT, RO, RU, SC, SD, SE, SG, SK, SL, SY, TJ, TM, TN, TR, TT, TZ, UA, UG, US, UZ, VC, VN, YU, ZA, ZM, ZW.

(84) **Designated states** *(unless otherwise indicated, for every kind of regional protection available)*: ARIPO patent (BW, GH, GM, KE, LS, MW, MZ, SD, SL, SZ, TZ, UG, ZM, ZW), Eurasian patent (AM, AZ, BY, KG, KZ, MD, RU, TJ, TM), European patent (AT, BE, BG, CH, CY, CZ, DE, DK, EE, ES, FI, FR, GB, GR, HU, IE, IT, LU, MC, NL, PL, PT, RO, SE, SI, SK, TR), OAPI patent (BF, BJ, CF, CG, CI, CM, GA, GN, GQ, GW, ML, MR, NE, SN, TD, TG).

Published:

- *With International Search Report.*
- *before the expiration of the time limit for amending the claims and to be republished in the event of receipt of amendments*

For an explanation of the two-letter codes and the other abbreviations, reference is made to the explanations ("Guidance Notes on Codes and Abbreviations") at the beginning of each regular edition of the PCT Gazette.

rétractable dans la position détendue permet d'éloigner l'arme du véhicule tout en conservant un lien avec celui-ci. Dans sa position rétractée, elle permet un positionnement précis de l'arme sur le véhicule.