FIG. 1

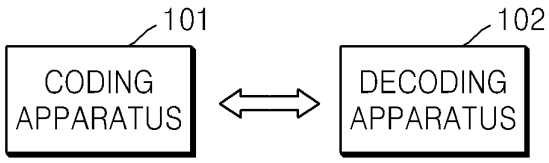

FIG. 2A

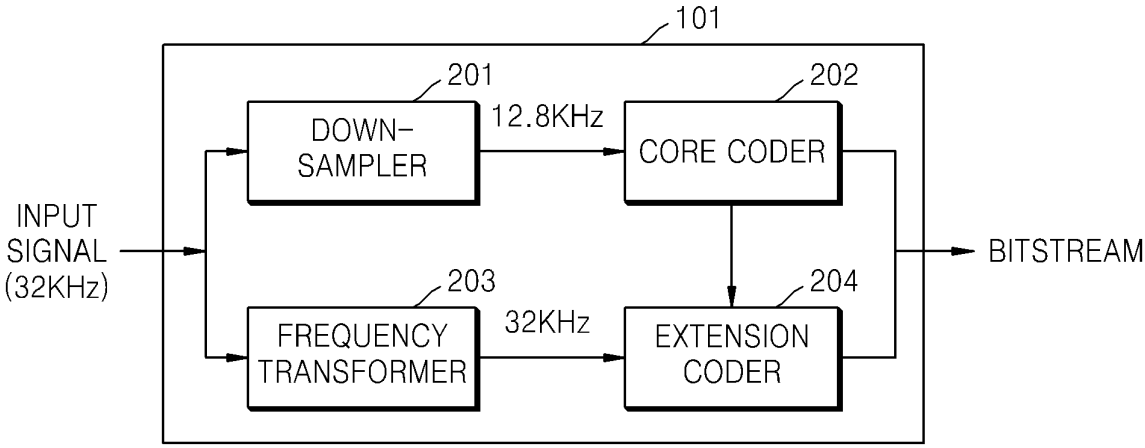

FIG. 2B

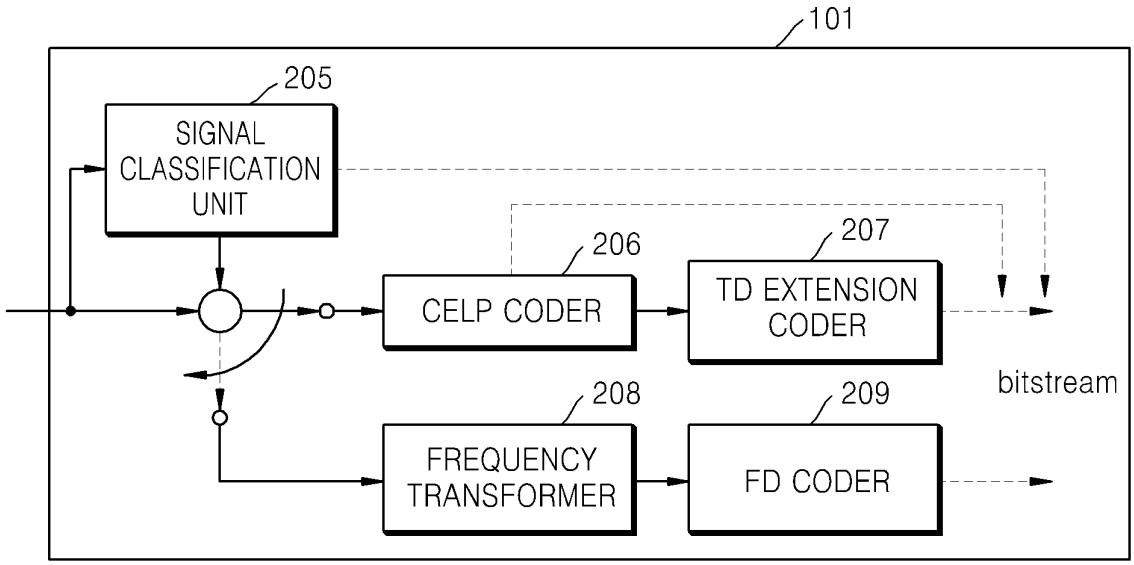

FIG. 2C

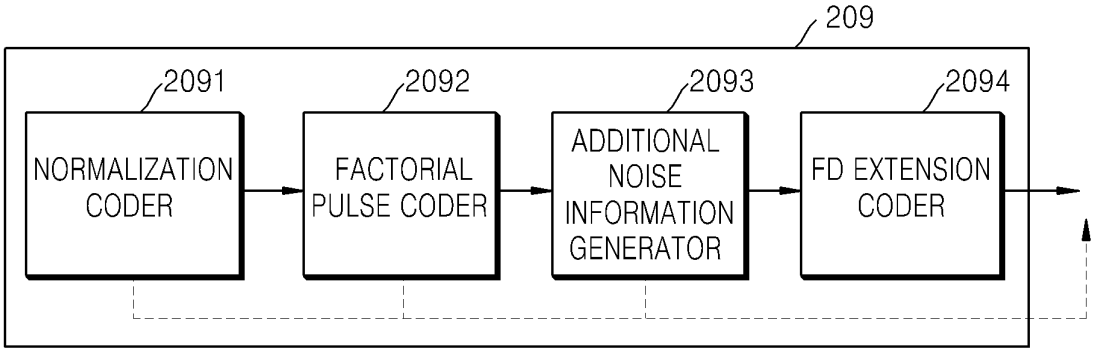
209
2091
NORMALIZATION CODER
2092
FACTORIAL PULSE CODER
2093
ADDITIONAL NOISE INFORMATION GENERATOR
2094
FD EXTENSION CODER

FIG. 2D

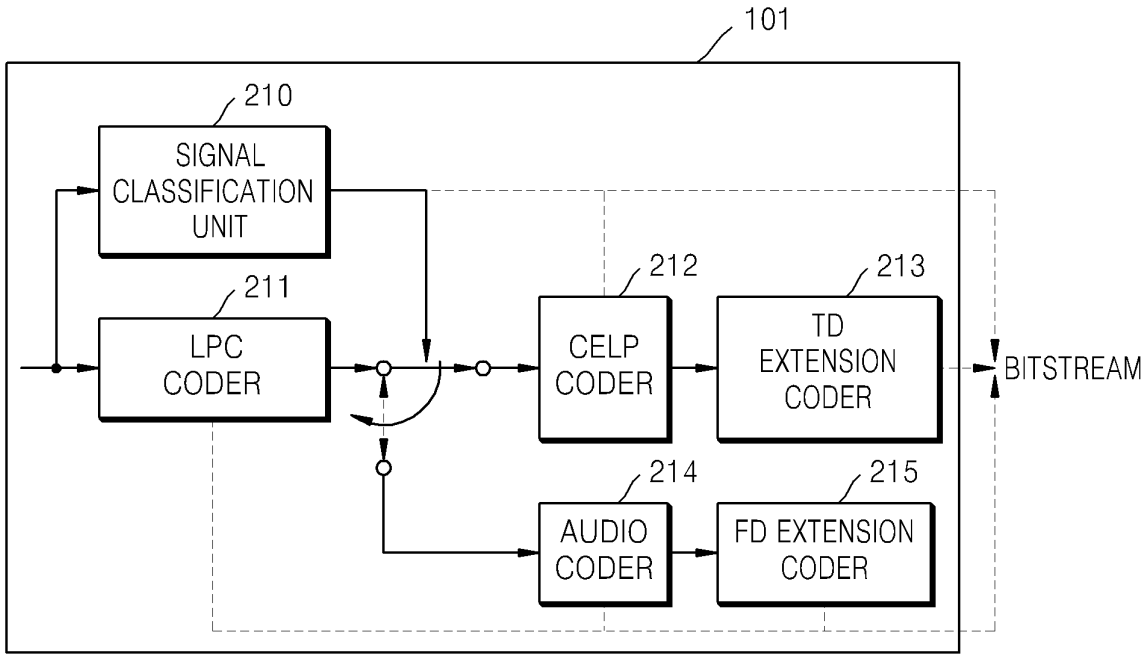
101
210
SIGNAL CLASSIFICATION UNIT
211
LPC CODER
212
CELP CODER
213
TD EXTENSION CODER
BITSTREAM
214
AUDIO CODER
215
FD EXTENSION CODER

FIG. 3

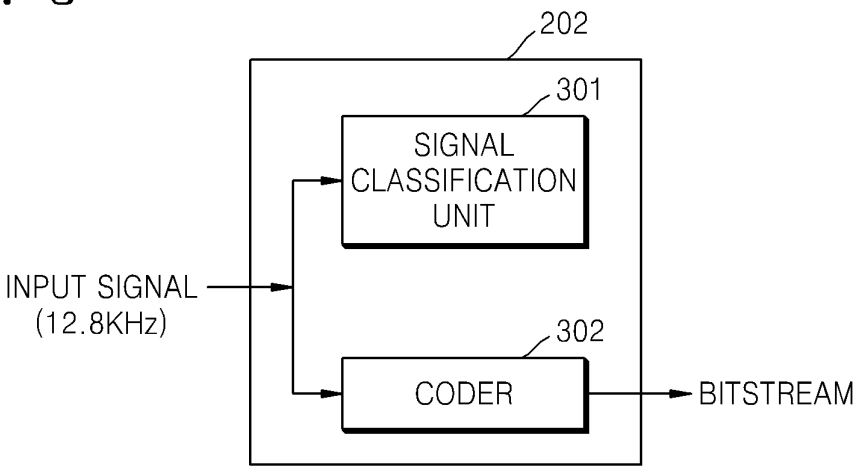
202
301
SIGNAL CLASSIFICATION UNIT
INPUT SIGNAL (12.8KHz)
302
CODER
BITSTREAM

FIG. 4

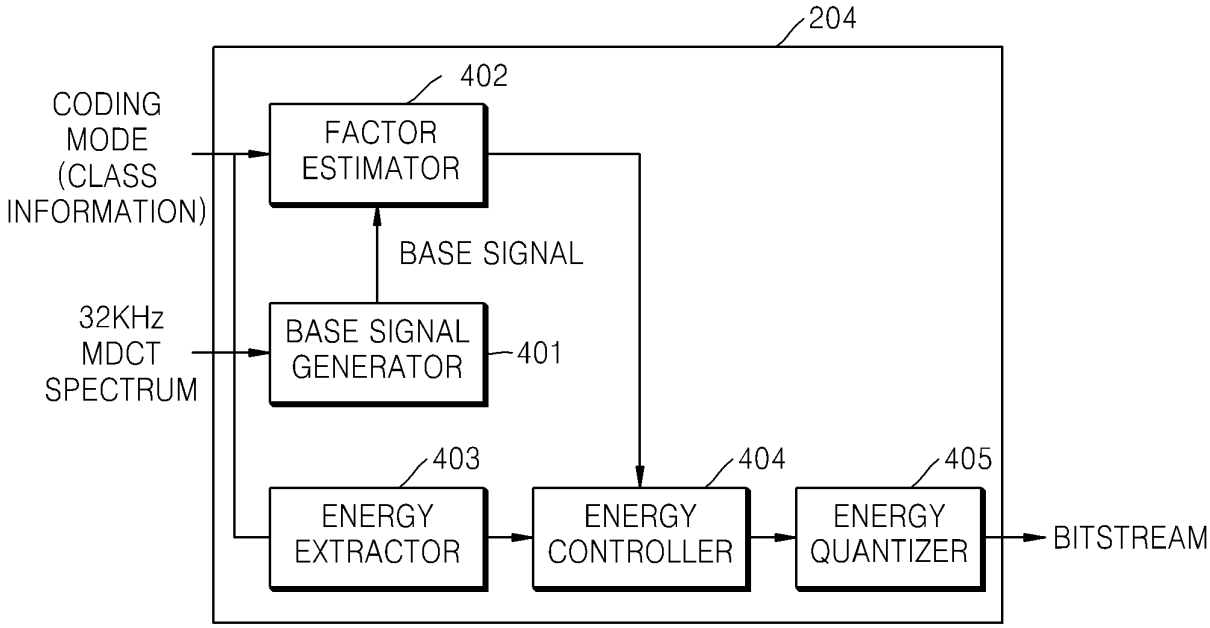
204
402
CODING MODE (CLASS INFORMATION)
FACTOR ESTIMATOR
BASE SIGNAL
32KHz MDCT SPECTRUM
BASE SIGNAL GENERATOR
401
403
404
405
ENERGY EXTRACTOR
ENERGY CONTROLLER
ENERGY QUANTIZER
BITSTREAM

FIG. 5

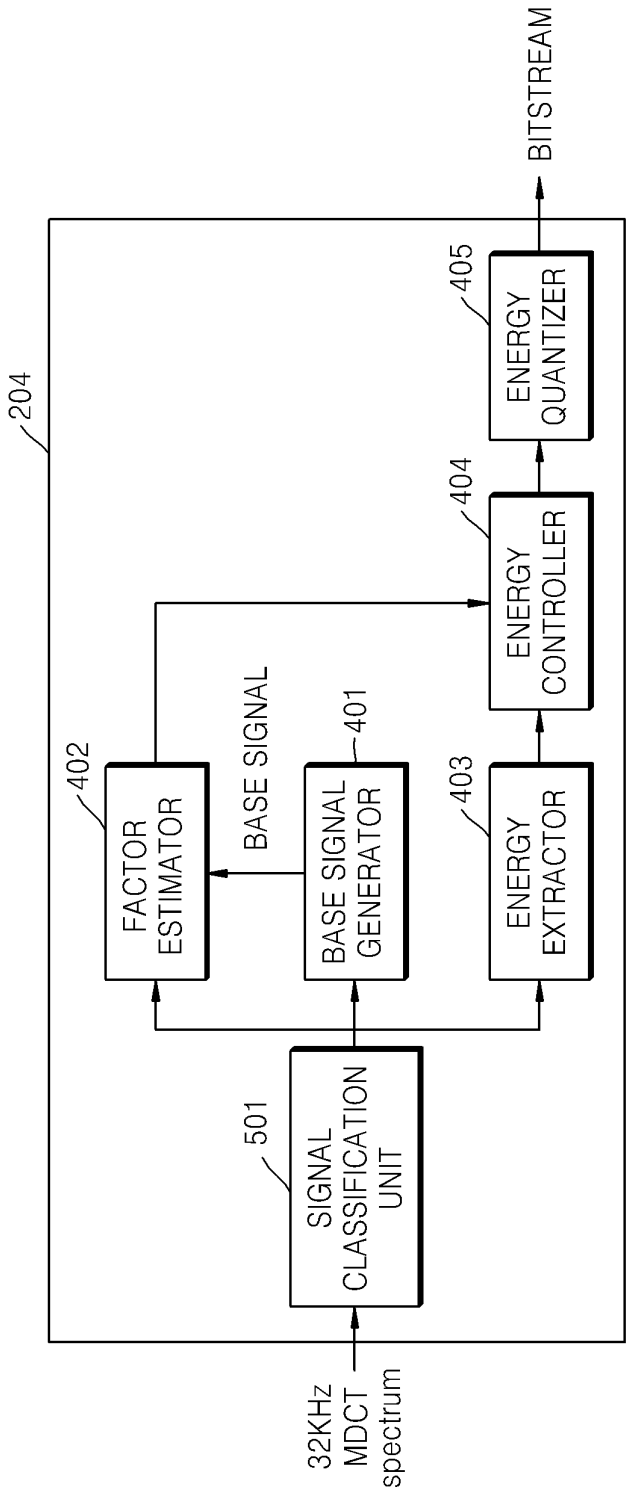
32KHz
MDCT
spectrum
204
501
SIGNAL
CLASSIFICATION
UNIT
402
FACTOR
ESTIMATOR
BASE SIGNAL
401
BASE SIGNAL
GENERATOR
403
ENERGY
EXTRACTOR
404
ENERGY
CONTROLLER
405
ENERGY
QUANTIZER
BITSTREAM

FIG. 6

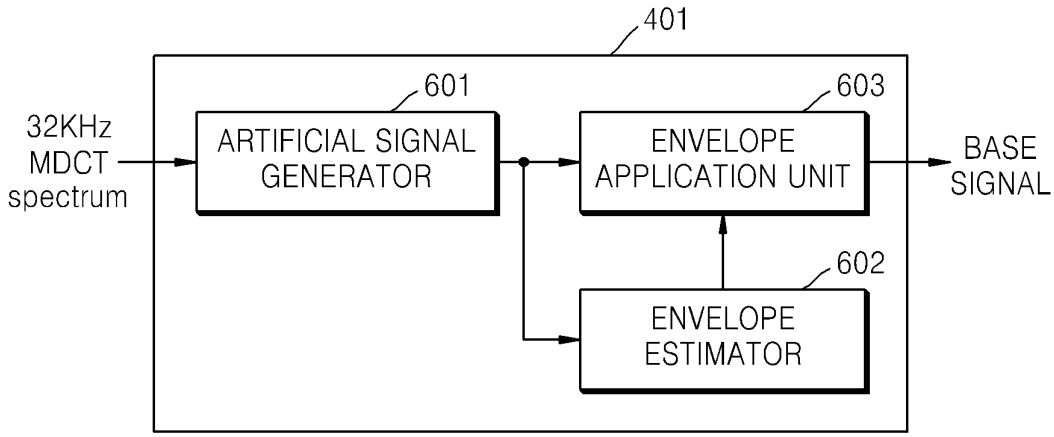
401
601
603
32KHz
MDCT
spectrum
ARTIFICIAL SIGNAL
GENERATOR
ENVELOPE
APPLICATION UNIT
BASE
SIGNAL
602
ENVELOPE
ESTIMATOR

FIG. 7

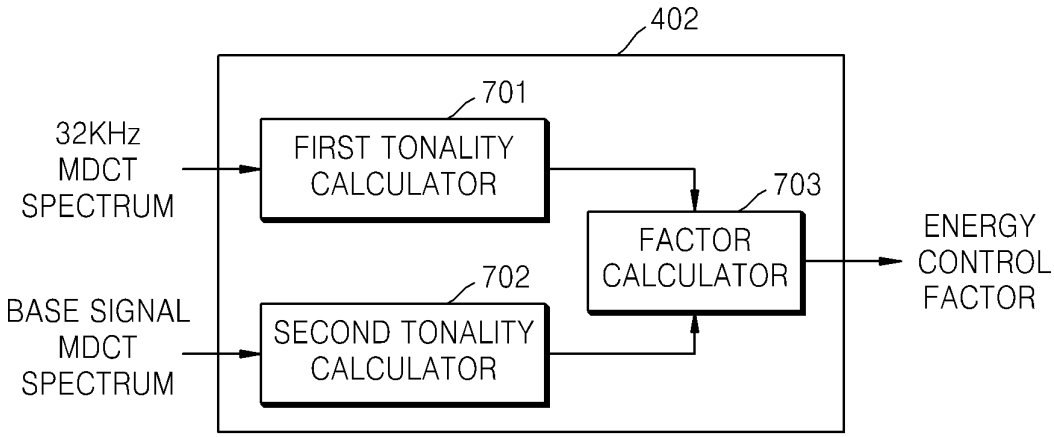
402
701
32KHz
MDCT
SPECTRUM
FIRST TONALITY
CALCULATOR
703
FACTOR
CALCULATOR
ENERGY
CONTROL
FACTOR
702
BASE SIGNAL
MDCT
SPECTRUM
SECOND TONALITY
CALCULATOR

FIG. 8

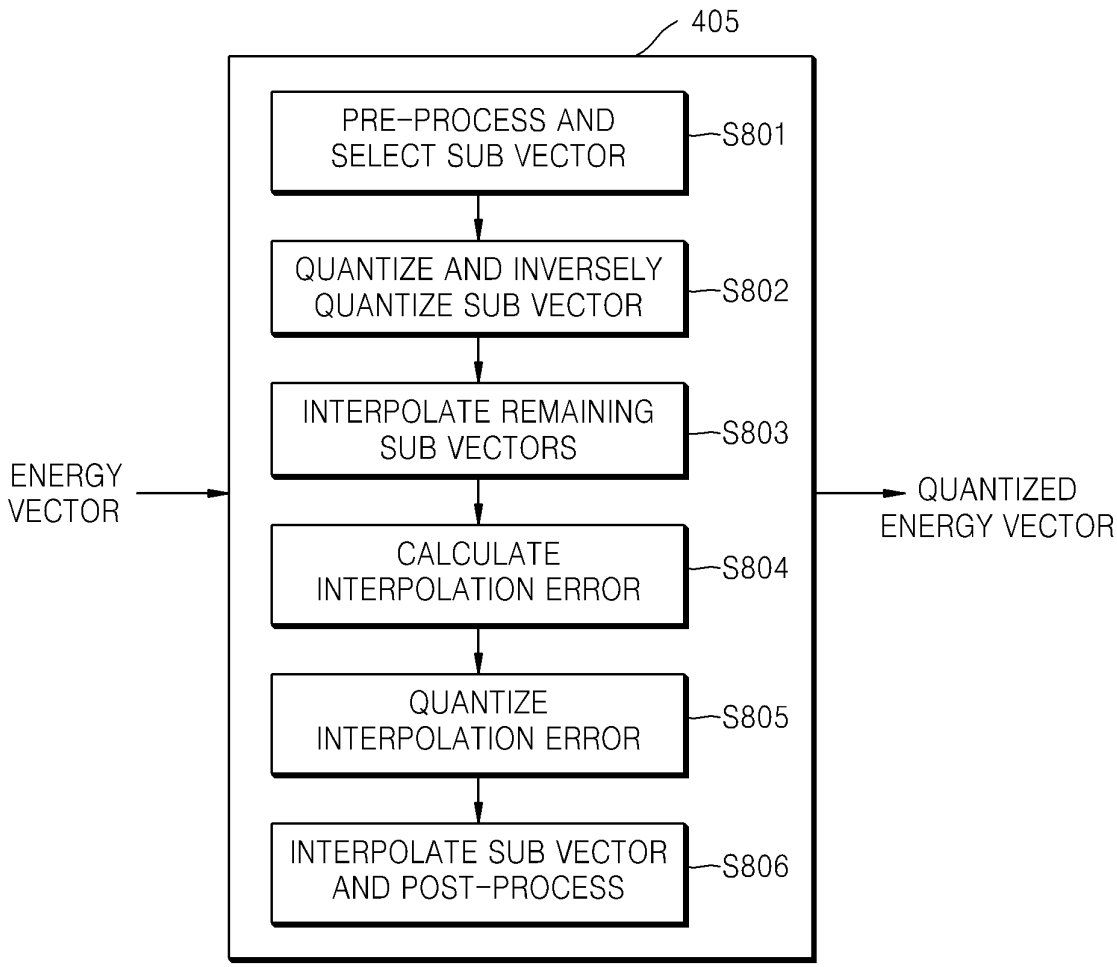
405
PRE-PROCESS AND SELECT SUB VECTOR
S801
QUANTIZE AND INVERSELY QUANTIZE SUB VECTOR
S802
INTERPOLATE REMAINING SUB VECTORS
S803
CALCULATE INTERPOLATION ERROR
S804
QUANTIZE INTERPOLATION ERROR
S805
INTERPOLATE SUB VECTOR AND POST-PROCESS
S806
ENERGY VECTOR
QUANTIZED ENERGY VECTOR

FIG. 9

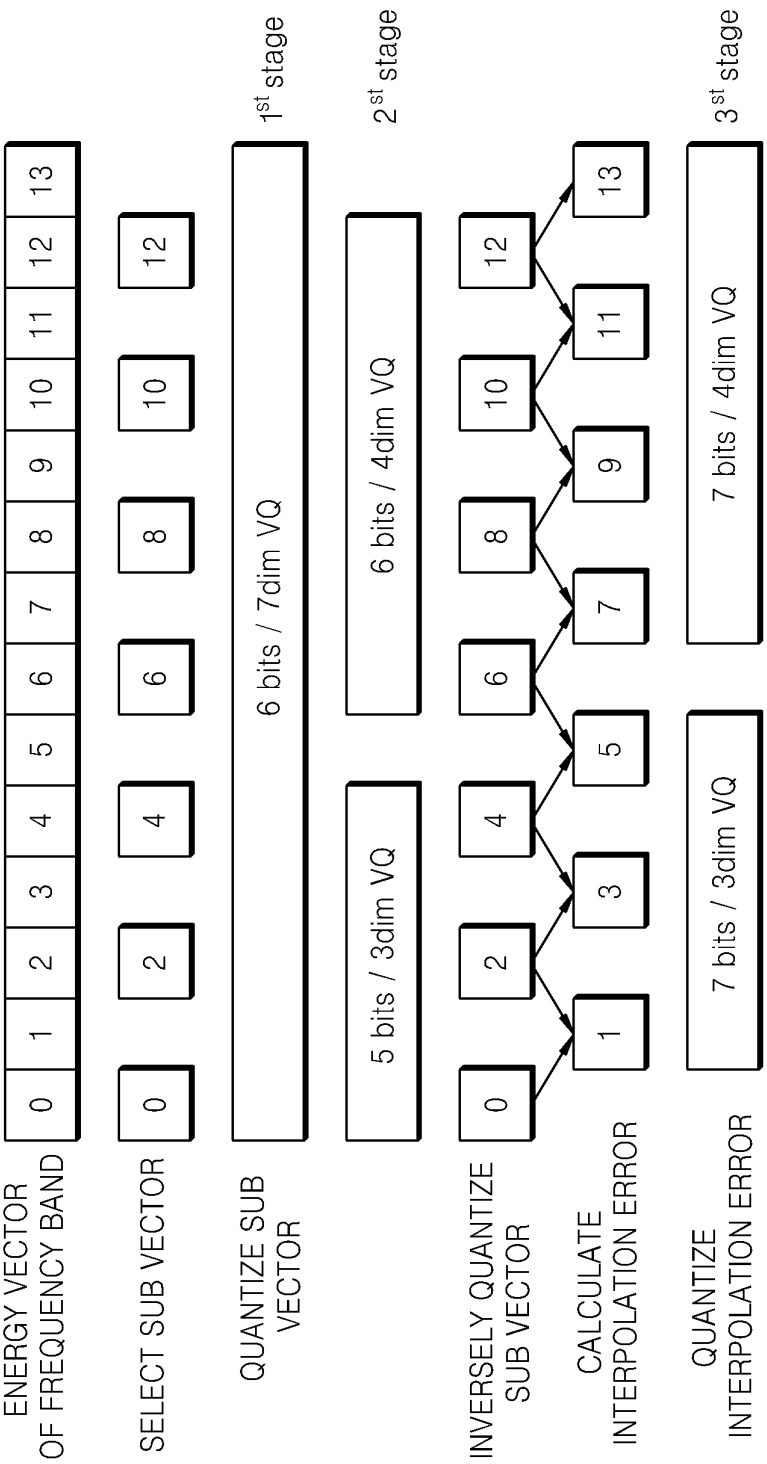
ENERGY VECTOR OF FREQUENCY BAND
0
1
2
3
4
5
6
7
8
9
10
11
12
13
SELECT SUB VECTOR
0
2
4
6
8
10
12
QUANTIZE SUB VECTOR
1st stage
6 bits / 7dim VQ
2st stage
6 bits / 4dim VQ
5 bits / 3dim VQ
INVERSELY QUANTIZE SUB VECTOR
CALCULATE INTERPOLATION ERROR
QUANTIZE INTERPOLATION ERROR
3st stage
7 bits / 4dim VQ
7 bits / 3dim VQ

FIG. 10

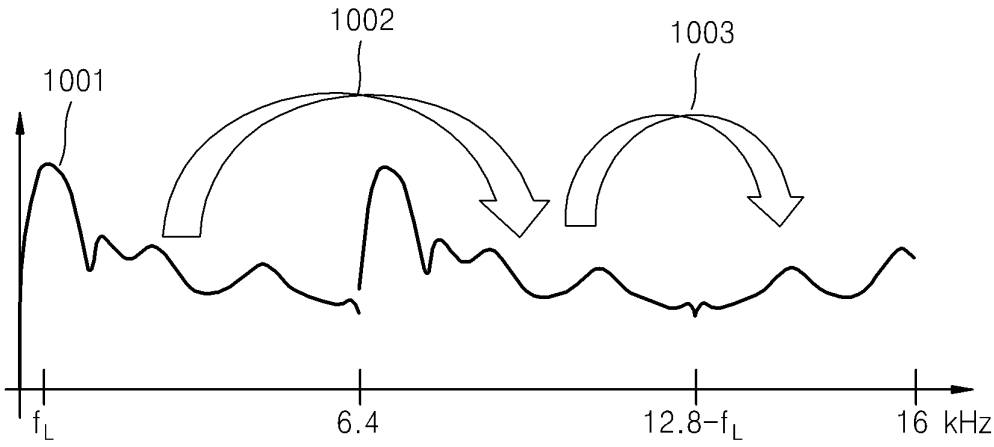

FIG. 11A

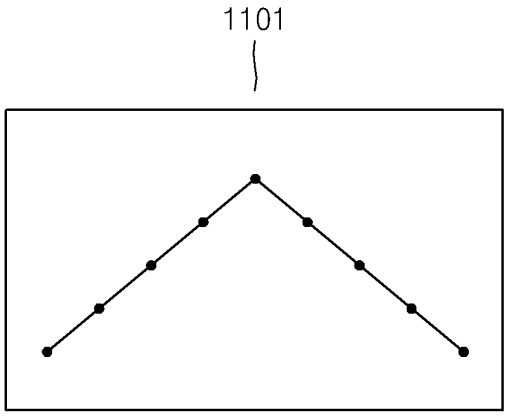

FIG. 11B

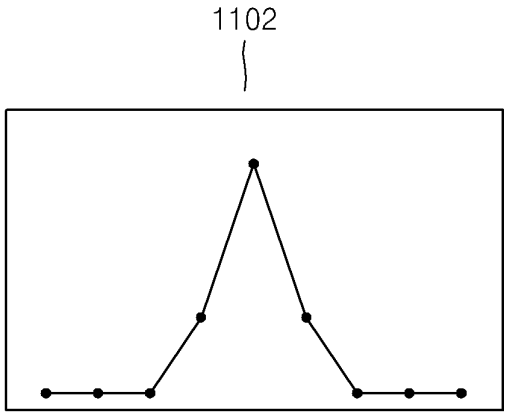

FIG. 12A

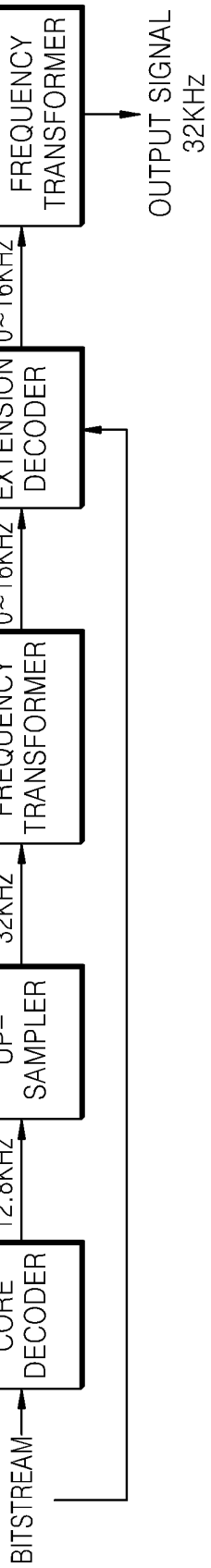
BITSTREAM
1201
CORE DECODER
12.8KHz
1202
UP-SAMPLER
32KHz
1203
FREQUENCY TRANSFORMER
0~16KHz
1204
EXTENSION DECODER
0~16KHz
1205
INVERSE FREQUENCY TRANSFORMER
OUTPUT SIGNAL 32KHz

FIG. 12B

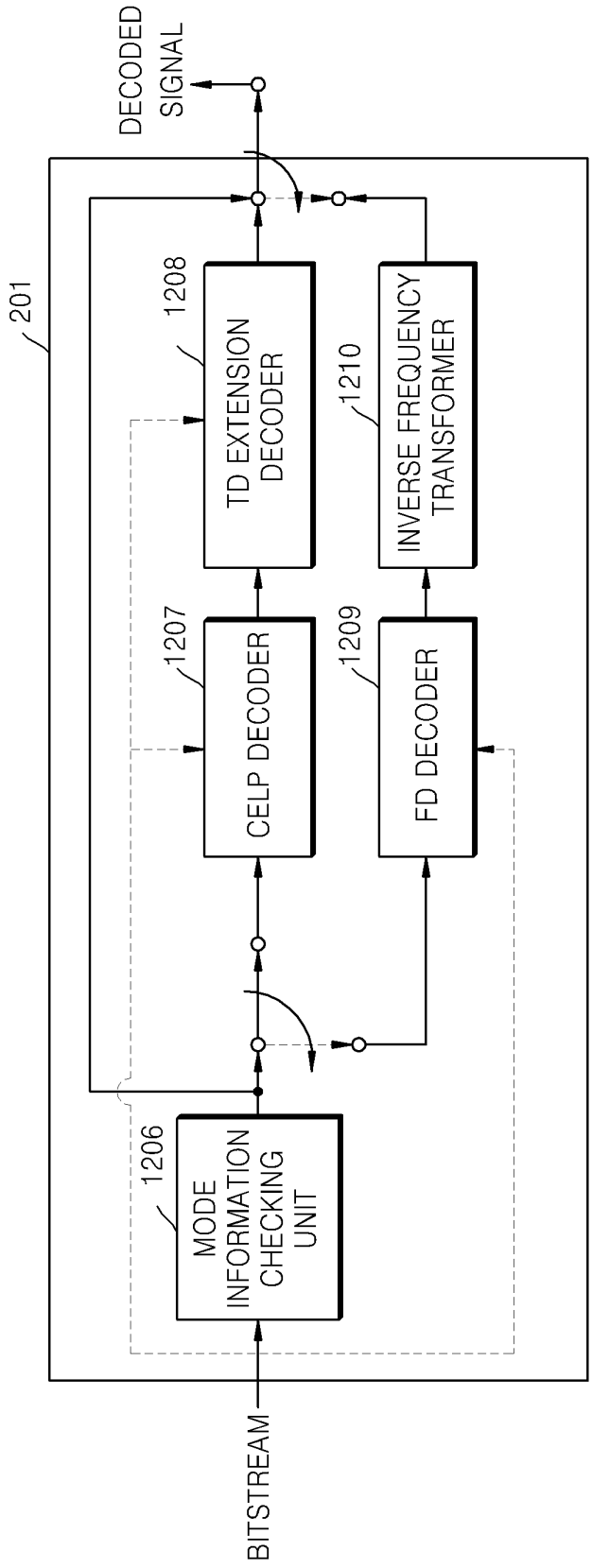
DECODED SIGNAL
201
1208
TD EXTENSION DECODER
1210
INVERSE FREQUENCY TRANSFORMER
1207
CELP DECODER
1209
FD DECODER
1206
MODE INFORMATION CHECKING UNIT
BITSTREAM

FIG. 12C

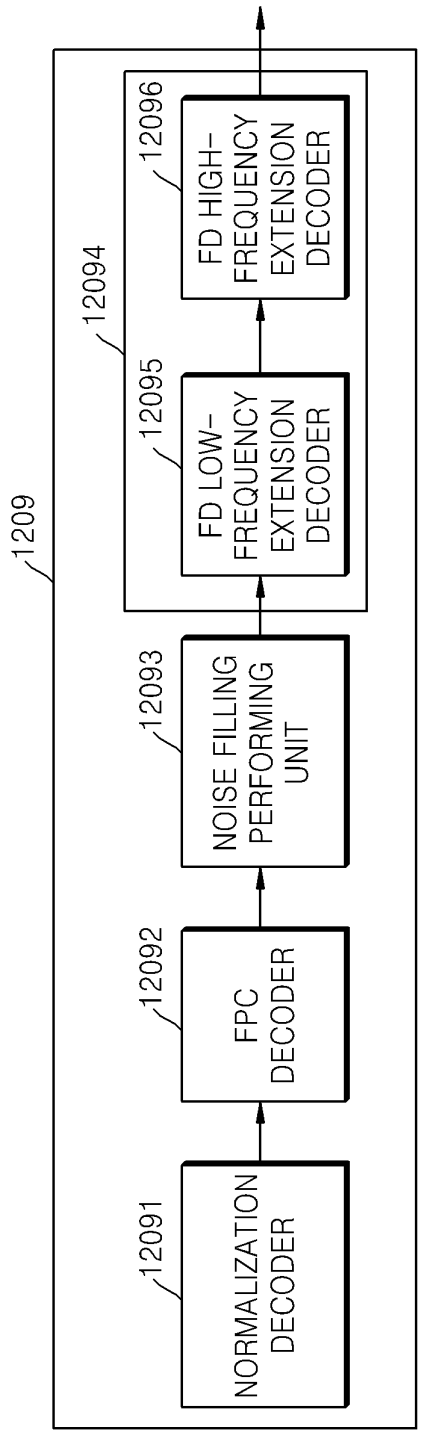
1209
12091
NORMALIZATION DECODER
12092
FPC DECODER
12093
NOISE FILLING PERFORMING UNIT
12094
12095
FD LOW-FREQUENCY EXTENSION DECODER
12096
FD HIGH-FREQUENCY EXTENSION DECODER

FIG. 12D

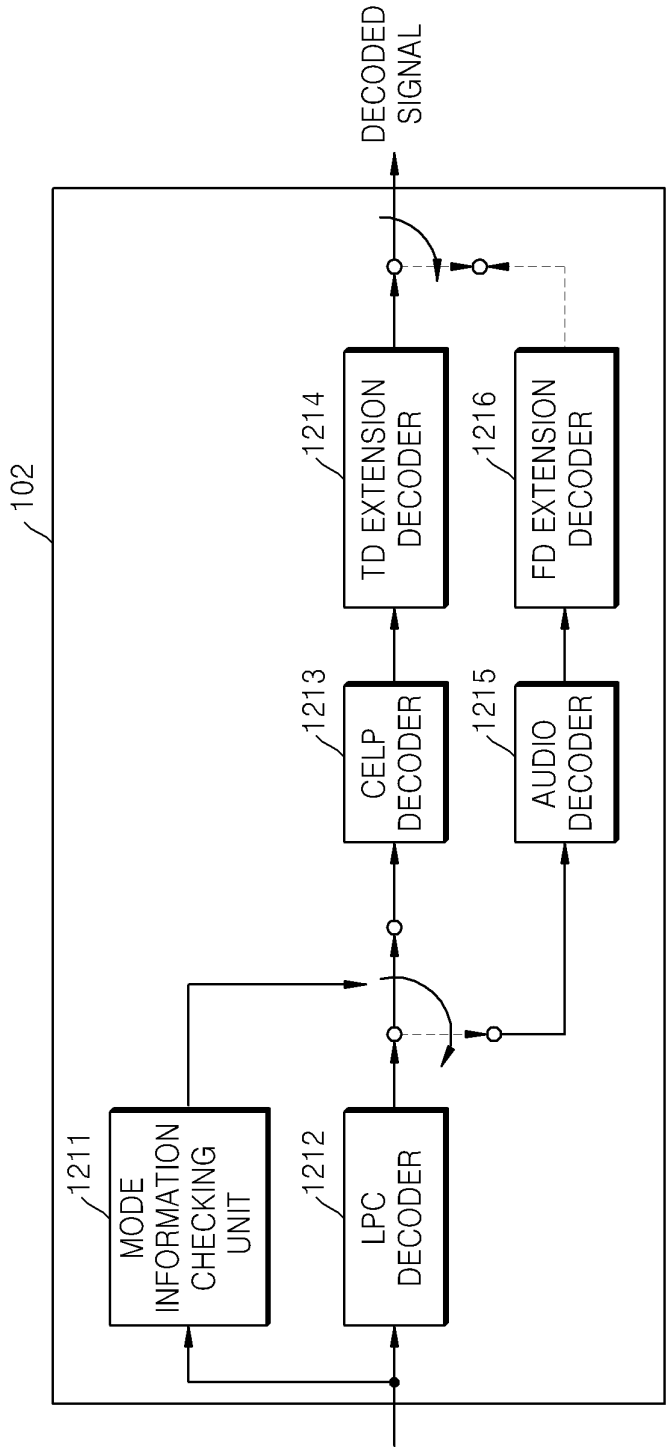
DECODED SIGNAL
102
1211
MODE INFORMATION CHECKING UNIT
1212
LPC DECODER
1213
CELP DECODER
1214
TD EXTENSION DECODER
1215
AUDIO DECODER
1216
FD EXTENSION DECODER

FIG. 13

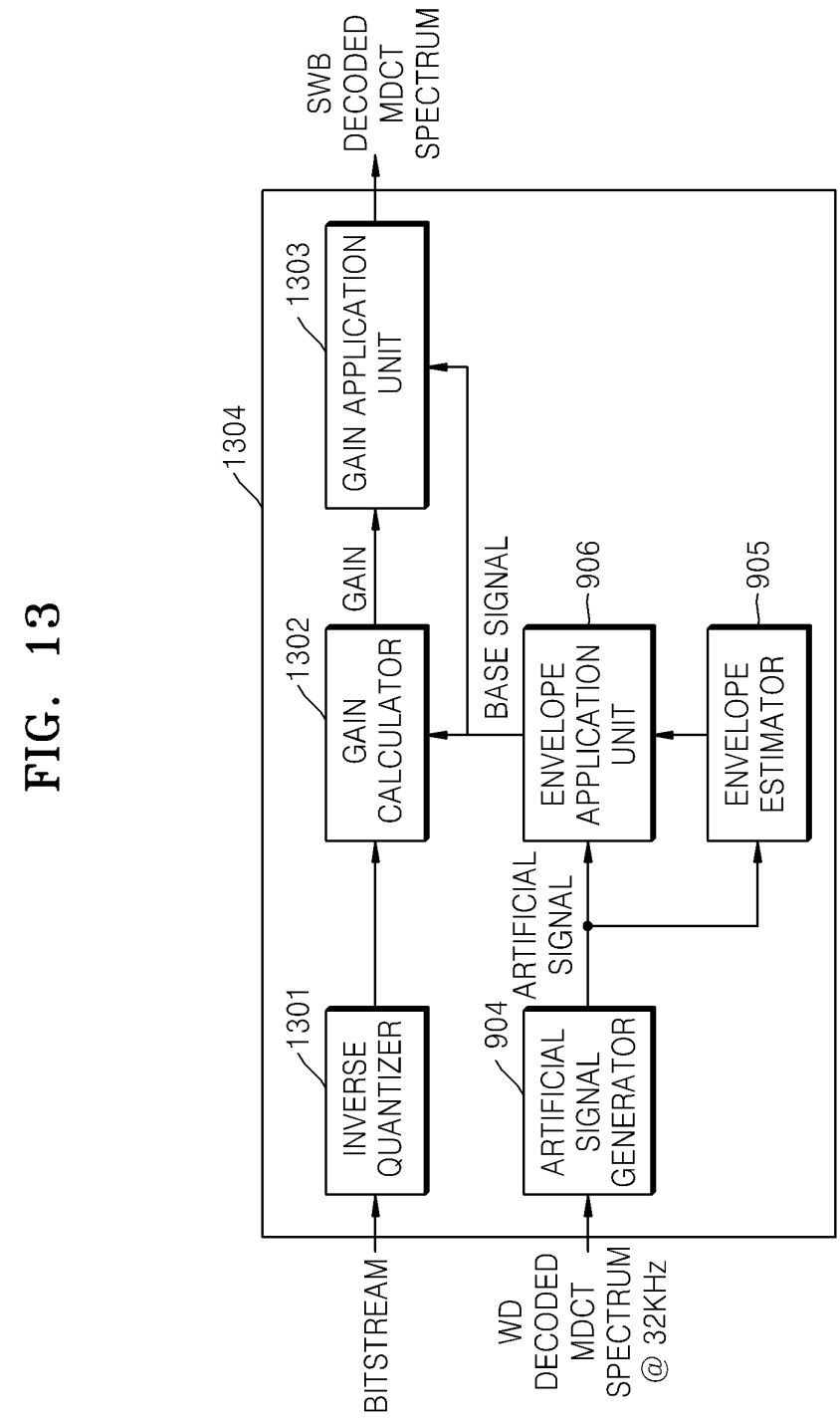
SWB DECODED MDCT SPECTRUM
1304
1303
GAIN APPLICATION UNIT
GAIN
1302
GAIN CALCULATOR
BASE SIGNAL
906
ENVELOPE APPLICATION UNIT
905
ENVELOPE ESTIMATOR
ARTIFICIAL SIGNAL
1301
INVERSE QUANTIZER
904
ARTIFICIAL SIGNAL GENERATOR
BITSTREAM
WD DECODED MDCT SPECTRUM @ 32KHz

FIG. 14

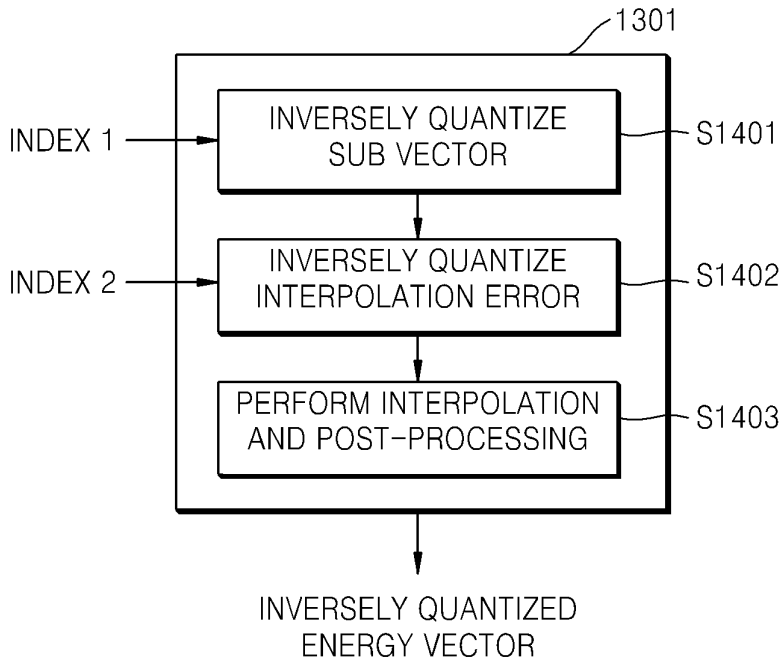
1301
INDEX 1
INVERSELY QUANTIZE SUB VECTOR
S1401
INDEX 2
INVERSELY QUANTIZE INTERPOLATION ERROR
S1402
PERFORM INTERPOLATION AND POST-PROCESSING
S1403
INVERSELY QUANTIZED ENERGY VECTOR

FIG. 15A

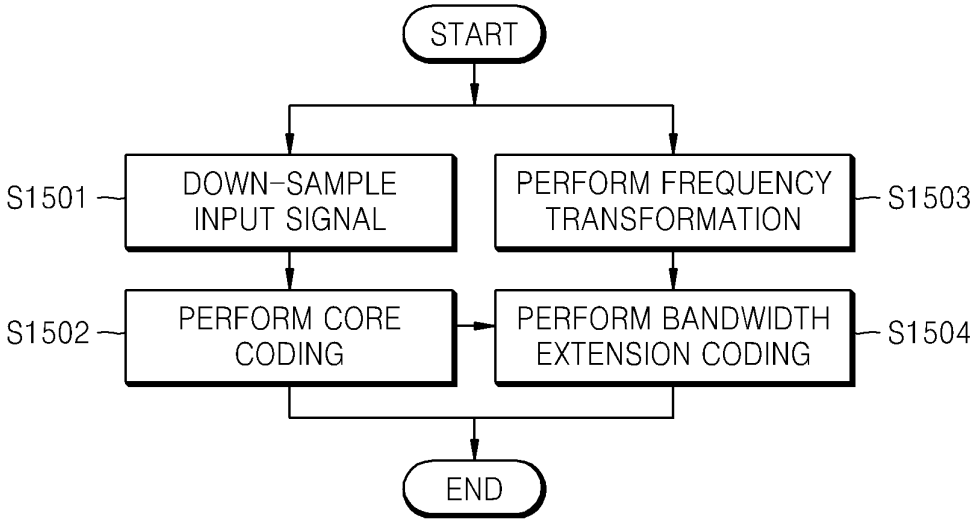

FIG. 15B

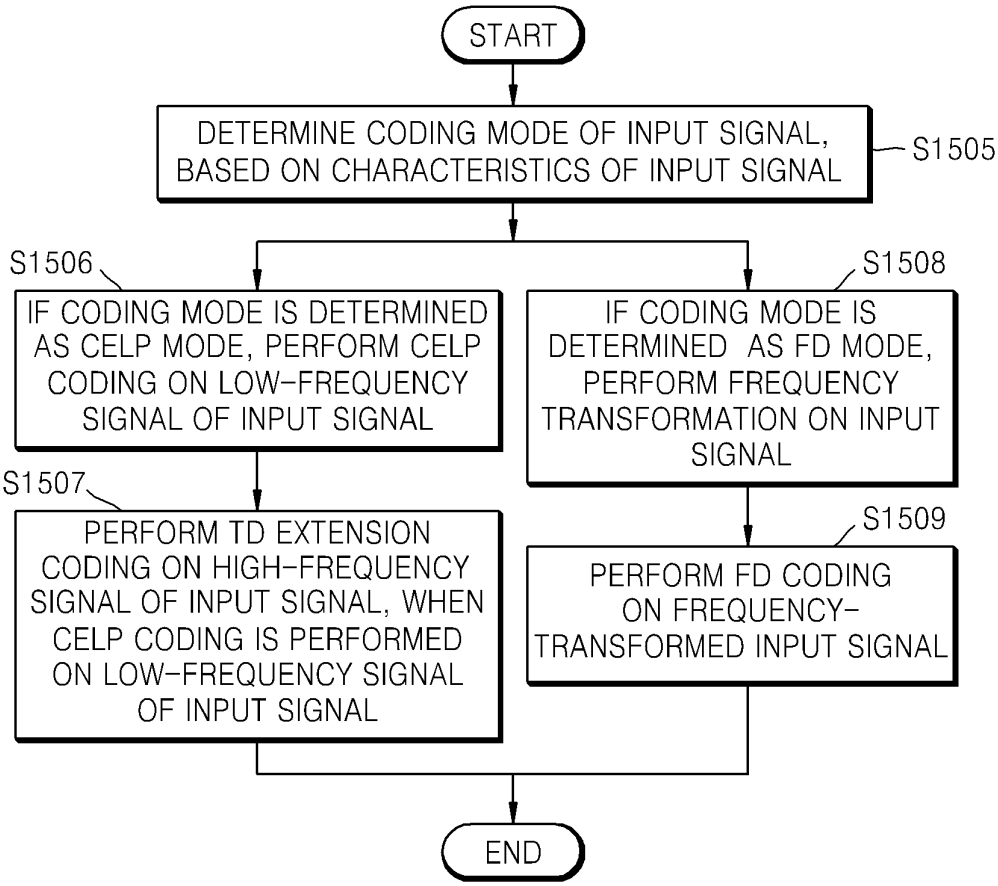

FIG. 15C

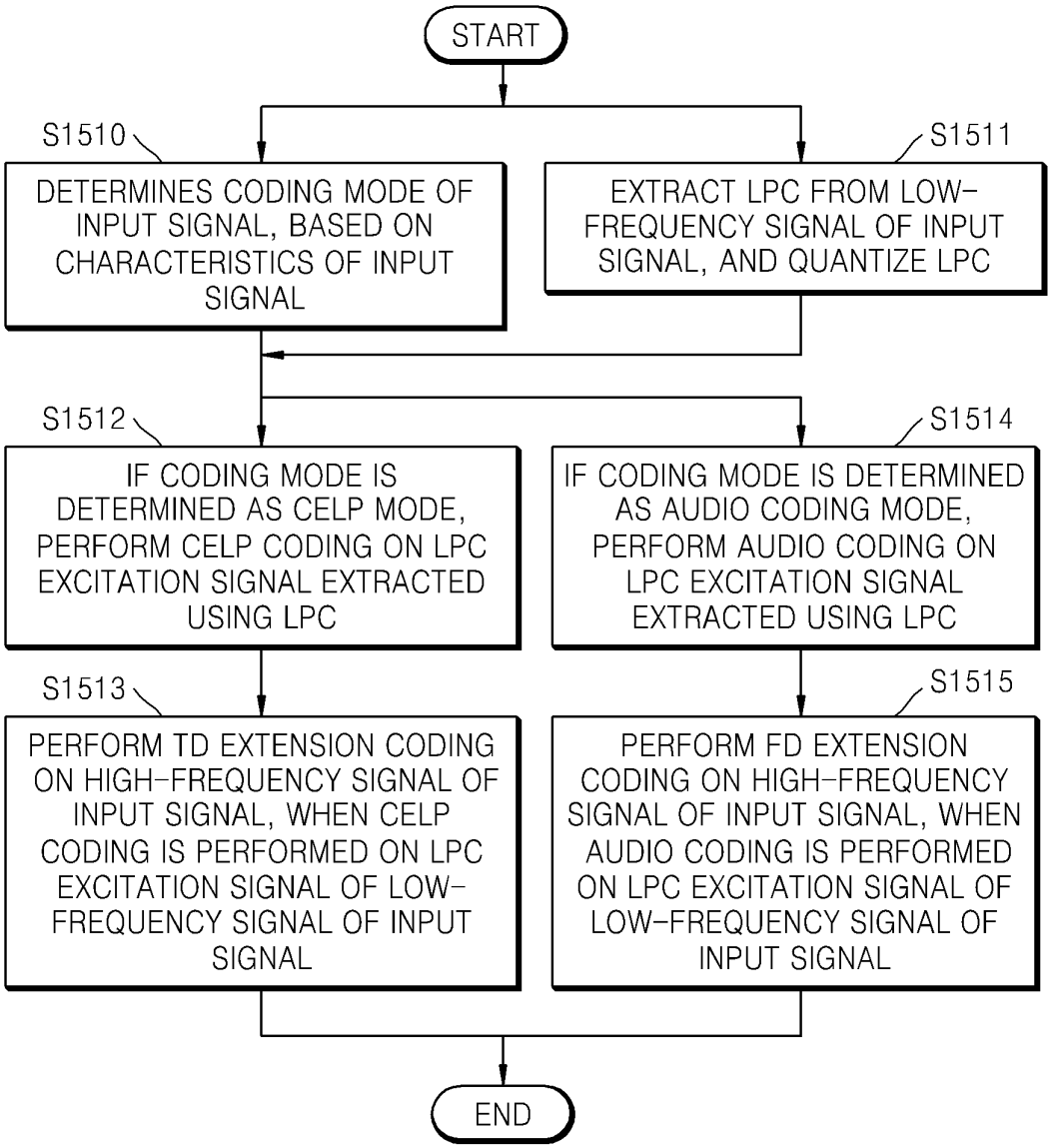
START
S1510
DETERMINES CODING MODE OF INPUT SIGNAL, BASED ON CHARACTERISTICS OF INPUT SIGNAL
S1511
EXTRACT LPC FROM LOW-FREQUENCY SIGNAL OF INPUT SIGNAL, AND QUANTIZE LPC
S1512
IF CODING MODE IS DETERMINED AS CELP MODE, PERFORM CELP CODING ON LPC EXCITATION SIGNAL EXTRACTED USING LPC
S1514
IF CODING MODE IS DETERMINED AS AUDIO CODING MODE, PERFORM AUDIO CODING ON LPC EXCITATION SIGNAL EXTRACTED USING LPC
S1513
PERFORM TD EXTENSION CODING ON HIGH-FREQUENCY SIGNAL OF INPUT SIGNAL, WHEN CELP CODING IS PERFORMED ON LPC EXCITATION SIGNAL OF LOW-FREQUENCY SIGNAL OF INPUT SIGNAL
S1515
PERFORM FD EXTENSION CODING ON HIGH-FREQUENCY SIGNAL OF INPUT SIGNAL, WHEN AUDIO CODING IS PERFORMED ON LPC EXCITATION SIGNAL OF LOW-FREQUENCY SIGNAL OF INPUT SIGNAL
END

FIG. 16A

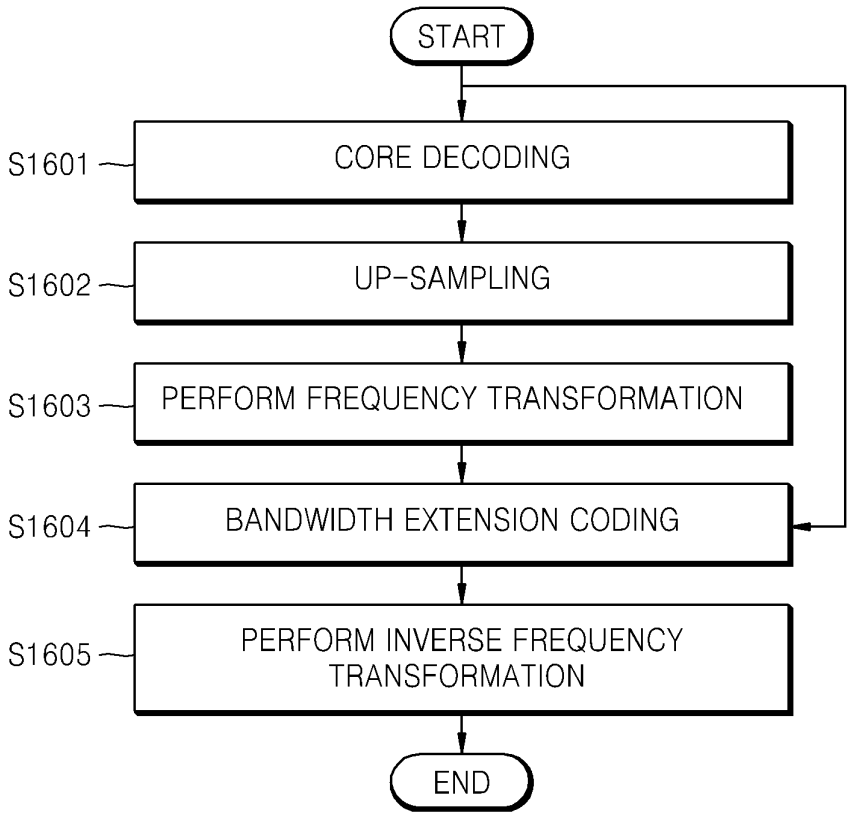
START
S1601
CORE DECODING
S1602
UP-SAMPLING
S1603
PERFORM FREQUENCY TRANSFORMATION
S1604
BANDWIDTH EXTENSION CODING
S1605
PERFORM INVERSE FREQUENCY TRANSFORMATION
END

FIG. 16B

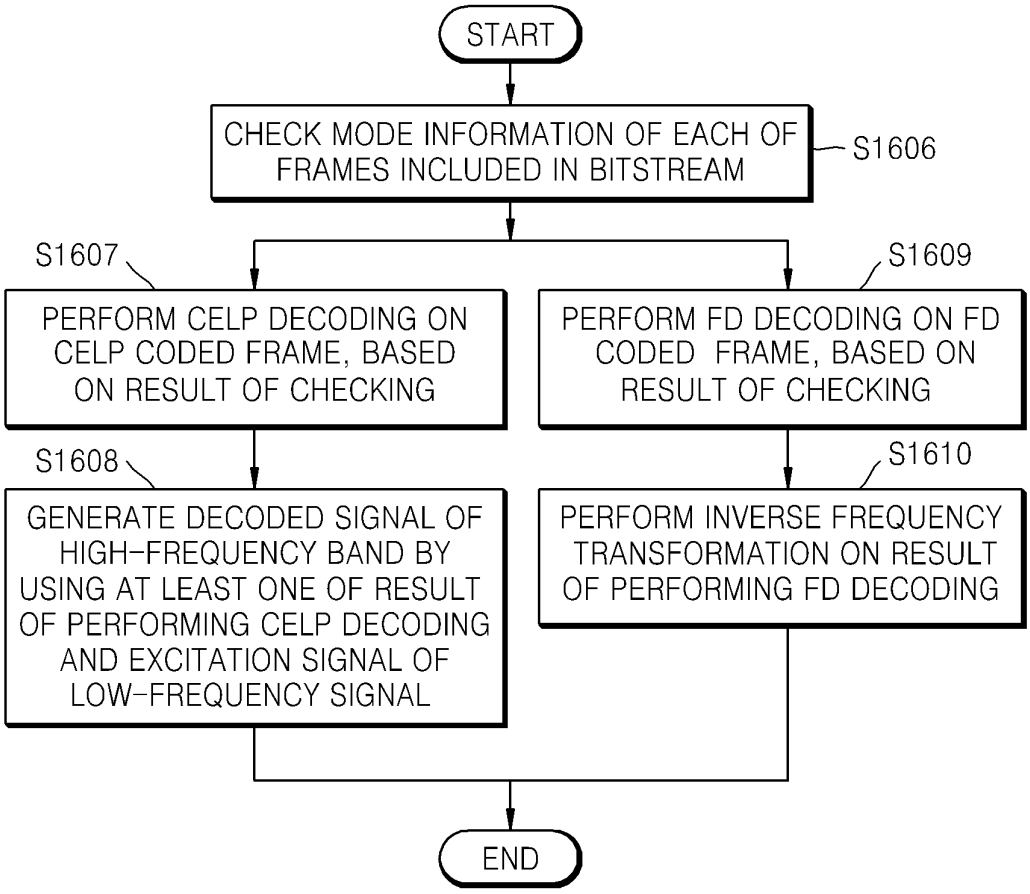
START
CHECK MODE INFORMATION OF EACH OF FRAMES INCLUDED IN BITSTREAM
S1606
S1607
PERFORM CELP DECODING ON CELP CODED FRAME, BASED ON RESULT OF CHECKING
S1608
GENERATE DECODED SIGNAL OF HIGH-FREQUENCY BAND BY USING AT LEAST ONE OF RESULT OF PERFORMING CELP DECODING AND EXCITATION SIGNAL OF LOW-FREQUENCY SIGNAL
S1609
PERFORM FD DECODING ON FD CODED FRAME, BASED ON RESULT OF CHECKING
S1610
PERFORM INVERSE FREQUENCY TRANSFORMATION ON RESULT OF PERFORMING FD DECODING
END

FIG. 16C

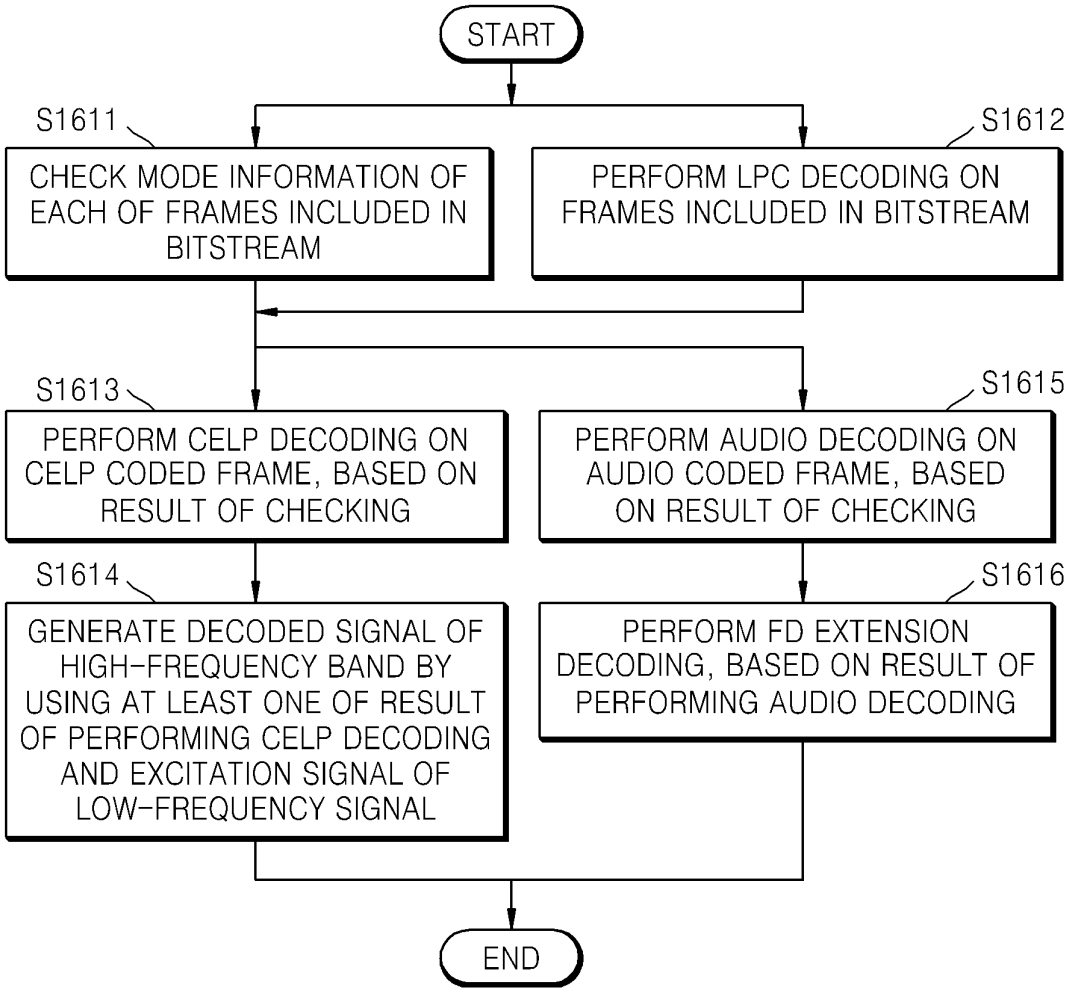
START
S1611
CHECK MODE INFORMATION OF EACH OF FRAMES INCLUDED IN BITSTREAM
S1612
PERFORM LPC DECODING ON FRAMES INCLUDED IN BITSTREAM
S1613
PERFORM CELP DECODING ON CELP CODED FRAME, BASED ON RESULT OF CHECKING
S1615
PERFORM AUDIO DECODING ON AUDIO CODED FRAME, BASED ON RESULT OF CHECKING
S1614
GENERATE DECODED SIGNAL OF HIGH-FREQUENCY BAND BY USING AT LEAST ONE OF RESULT OF PERFORMING CELP DECODING AND EXCITATION SIGNAL OF LOW-FREQUENCY SIGNAL
S1616
PERFORM FD EXTENSION DECODING, BASED ON RESULT OF PERFORMING AUDIO DECODING
END

FIG. 17

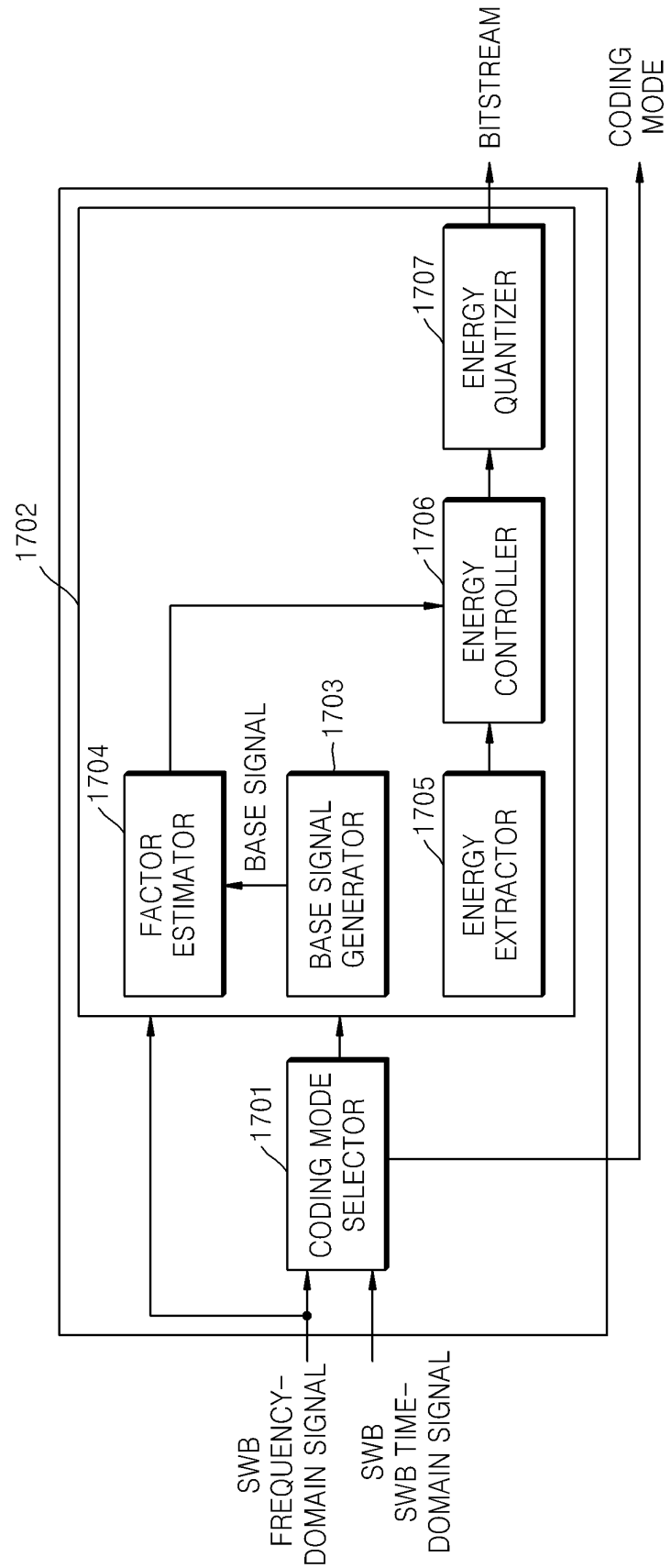
SWB FREQUENCY-DOMAIN SIGNAL
SWB TIME-DOMAIN SIGNAL
1701
CODING MODE SELECTOR
1702
1703
BASE SIGNAL GENERATOR
BASE SIGNAL
1704
FACTOR ESTIMATOR
1705
ENERGY EXTRACTOR
1706
ENERGY CONTROLLER
1707
ENERGY QUANTIZER
BITSTREAM
CODING MODE

FIG. 18

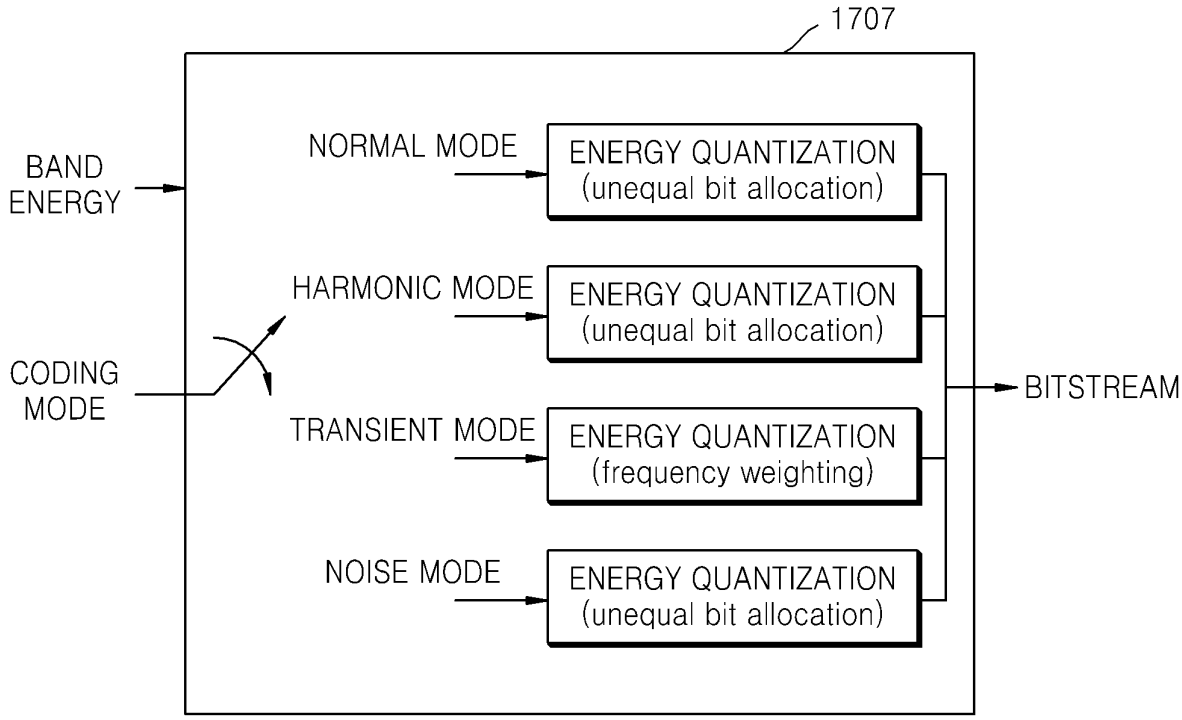
1707
BAND ENERGY
CODING MODE
NORMAL MODE
ENERGY QUANTIZATION (unequal bit allocation)
HARMONIC MODE
ENERGY QUANTIZATION (unequal bit allocation)
TRANSIENT MODE
ENERGY QUANTIZATION (frequency weighting)
NOISE MODE
ENERGY QUANTIZATION (unequal bit allocation)
BITSTREAM

FIG. 19

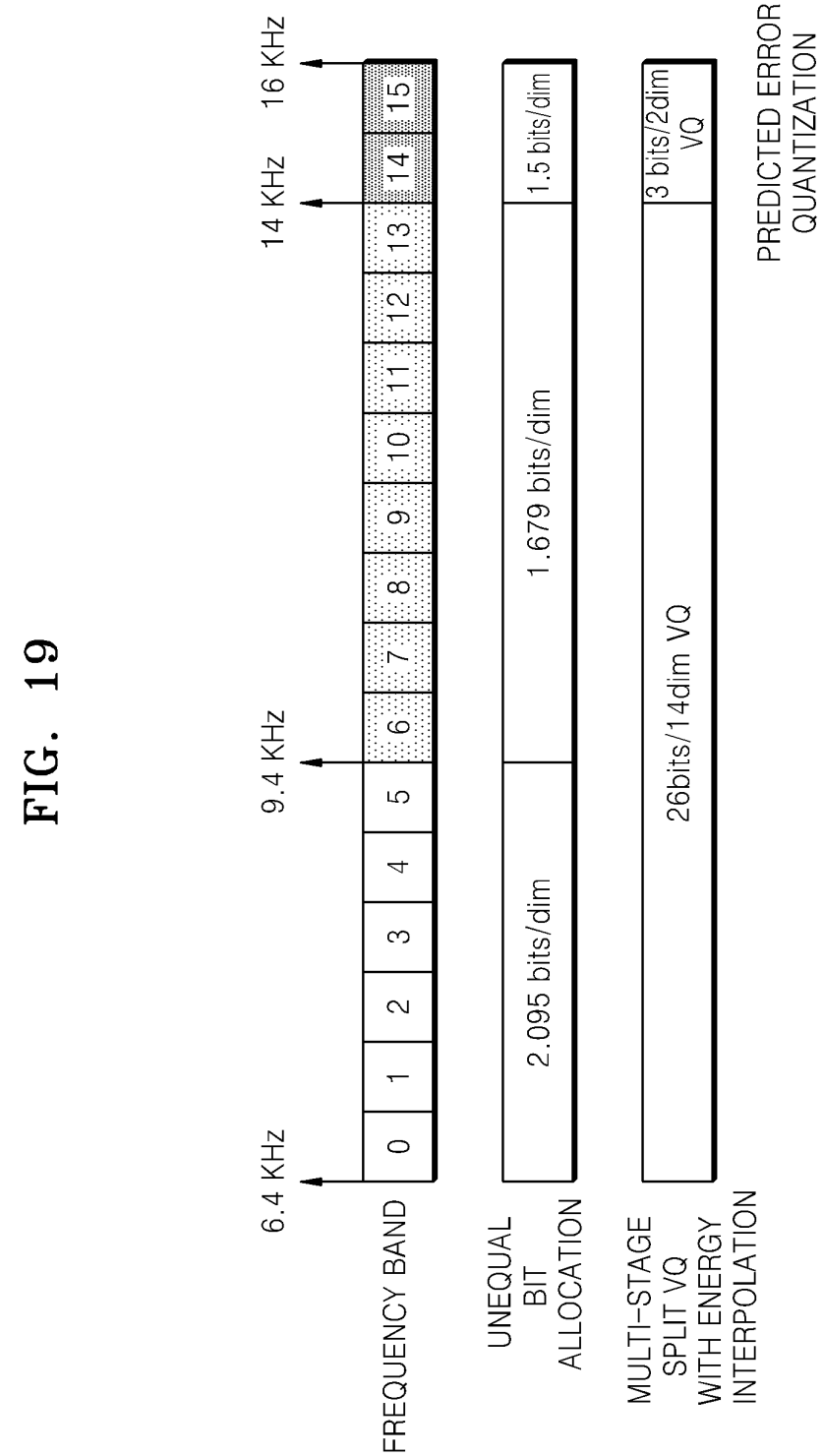
6.4 KHz
9.4 KHz
14 KHz
16 KHz
FREQUENCY BAND
0
1
2
3
4
5
6
7
8
9
10
11
12
13
14
15
UNEQUAL BIT ALLOCATION
2.095 bits/dim
1.679 bits/dim
1.5 bits/dim
MULTI-STAGE SPLIT VQ WITH ENERGY INTERPOLATION
26bits/14dim VQ
3 bits/2dim VQ
PREDICTED ERROR QUANTIZATION

FIG. 20

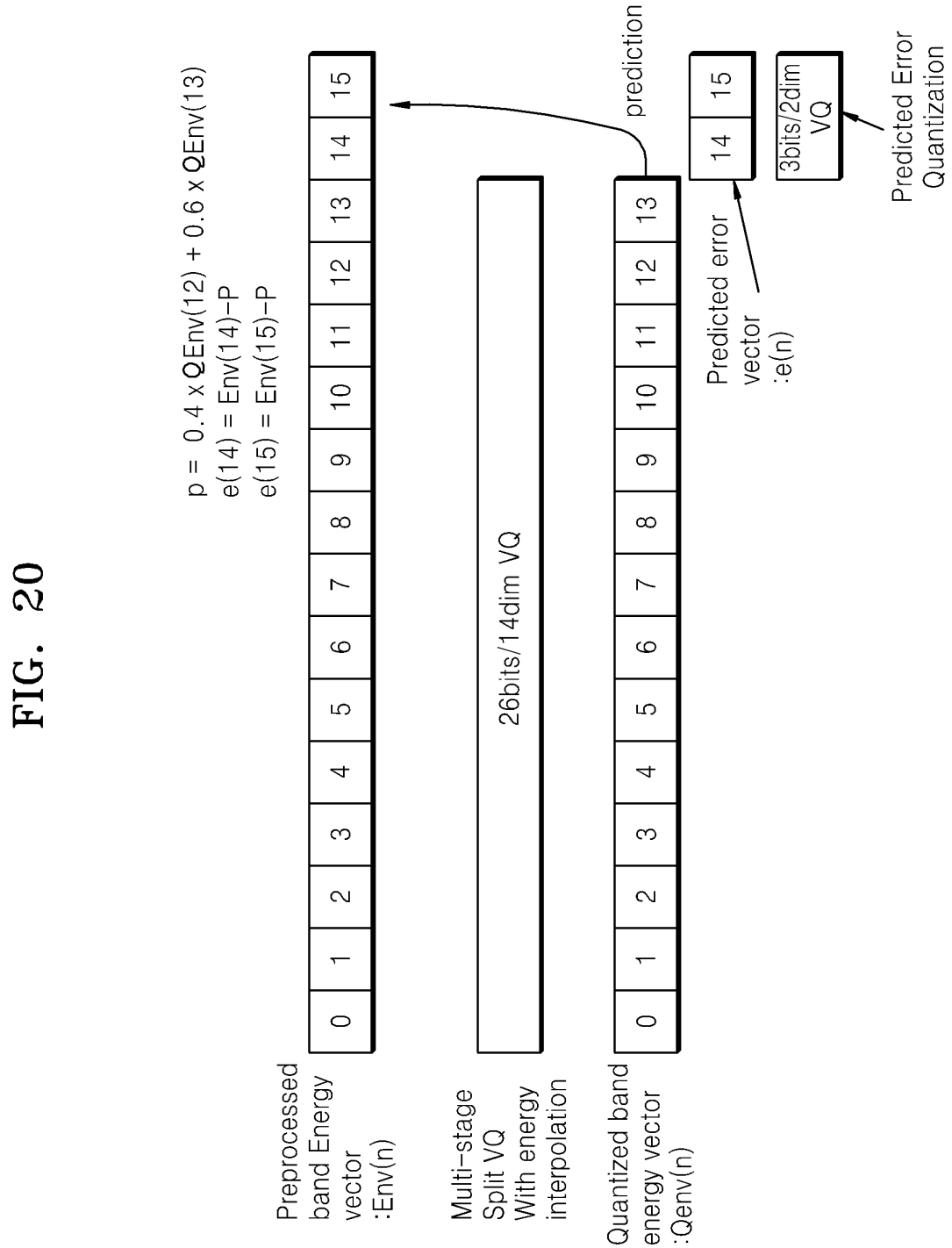
p = 0.4 x QEnv(12) + 0.6 x QEnv(13)
e(14) = Env(14)-P
e(15) = Env(15)-P
Preprocessed band Energy vector :Env(n)
0 1 2 3 4 5 6 7 8 9 10 11 12 13 14 15
Multi-stage Split VQ With energy interpolation
26bits/14dim VQ
Quantized band energy vector :Qenv(n)
0 1 2 3 4 5 6 7 8 9 10 11 12 13
prediction
Predicted error vector :e(n)
14 15
3bits/2dim VQ
Predicted Error Quantization

FIG. 21

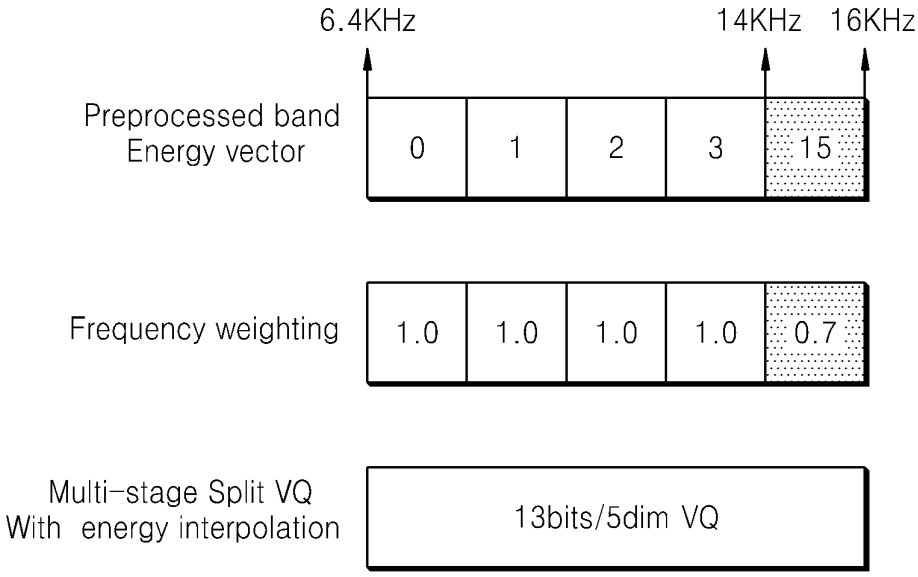
6.4KHz
14KHz
16KHz
Preprocessed band Energy vector
0
1
2
3
15
Frequency weighting
1.0
1.0
1.0
1.0
0.7
Multi-stage Split VQ With energy interpolation
13bits/5dim VQ

FIG. 22

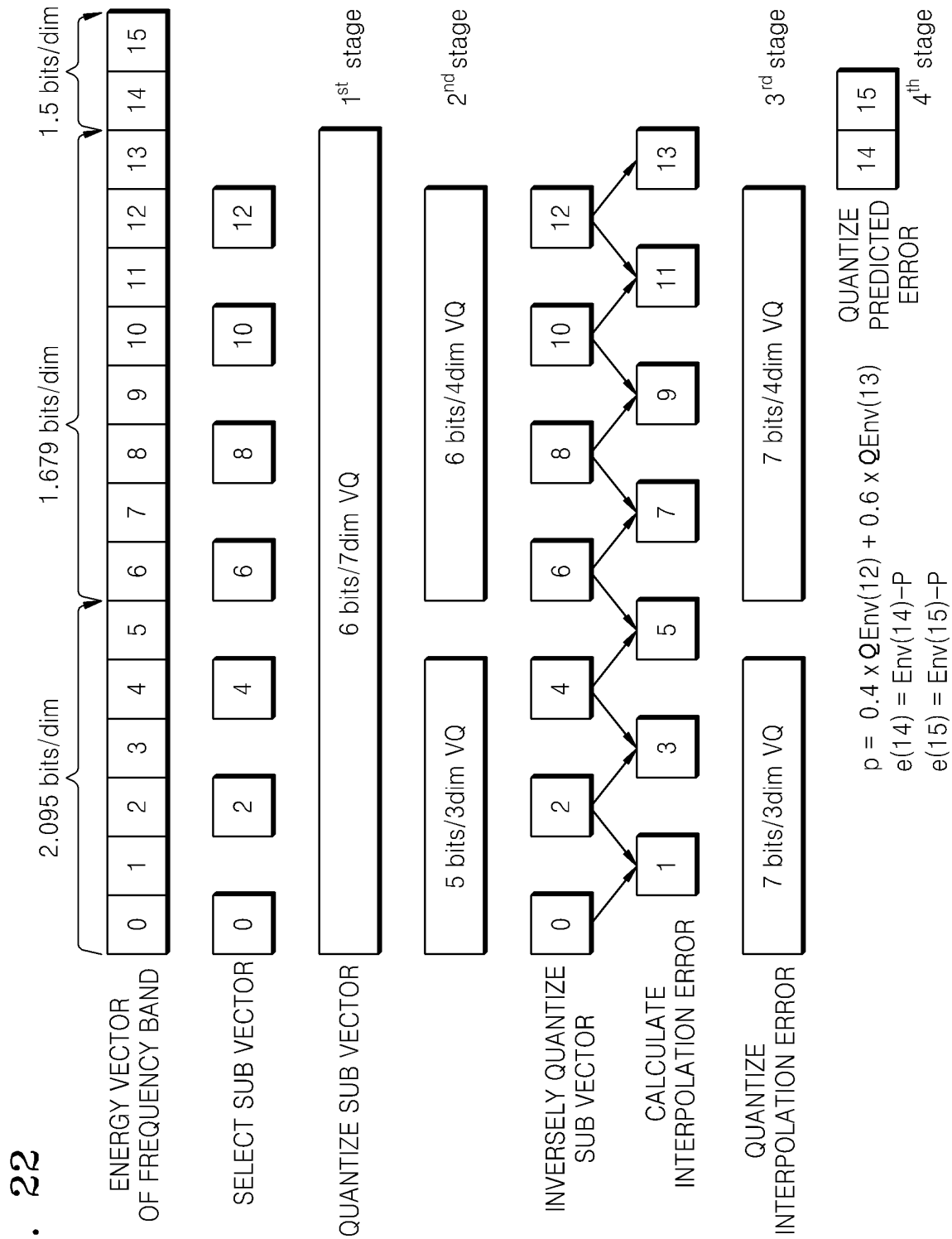
2.095 bits/dim
1.679 bits/dim
1.5 bits/dim
ENERGY VECTOR OF FREQUENCY BAND
0 1 2 3 4 5 6 7 8 9 10 11 12 13 14 15
SELECT SUB VECTOR
0 2 4 6 8 10 12
QUANTIZE SUB VECTOR
1st stage
6 bits/7dim VQ
2nd stage
5 bits/3dim VQ
6 bits/4dim VQ
INVERSELY QUANTIZE SUB VECTOR
CALCULATE INTERPOLATION ERROR
3rd stage
QUANTIZE INTERPOLATION ERROR
7 bits/3dim VQ
7 bits/4dim VQ
QUANTIZE PREDICTED ERROR
4th stage
14 15
p = 0.4 x QEnv(12) + 0.6 x QEnv(13)
e(14) = Env(14)−P
e(15) = Env(15)−P

FIG. 23

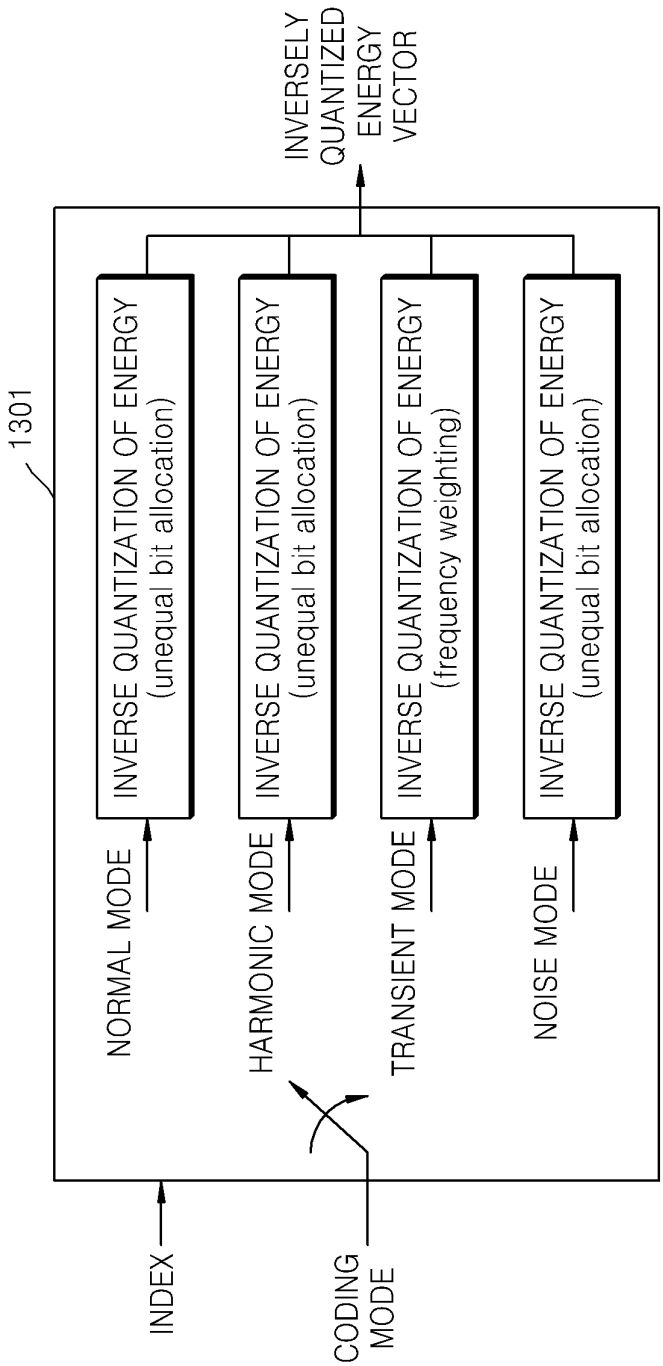
INVERSELY QUANTIZED ENERGY VECTOR
1301
INVERSE QUANTIZATION OF ENERGY (unequal bit allocation)
INVERSE QUANTIZATION OF ENERGY (unequal bit allocation)
INVERSE QUANTIZATION OF ENERGY (frequency weighting)
INVERSE QUANTIZATION OF ENERGY (unequal bit allocation)
NORMAL MODE
HARMONIC MODE
TRANSIENT MODE
NOISE MODE
INDEX
CODING MODE

FIG. 24

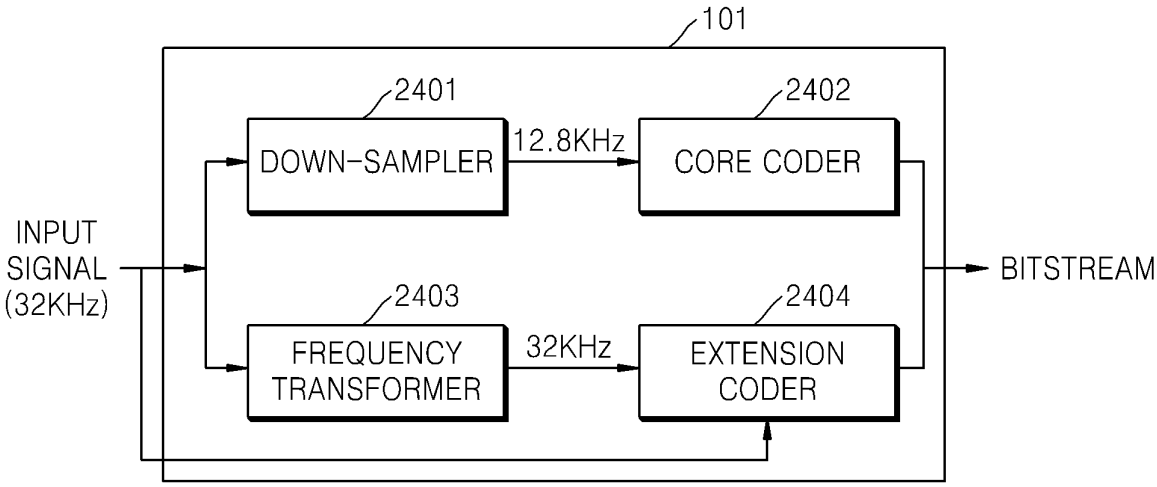
101
2401
DOWN-SAMPLER
12.8KHz
2402
CORE CODER
INPUT SIGNAL (32KHz)
BITSTREAM
2403
FREQUENCY TRANSFORMER
32KHz
2404
EXTENSION CODER

FIG. 25

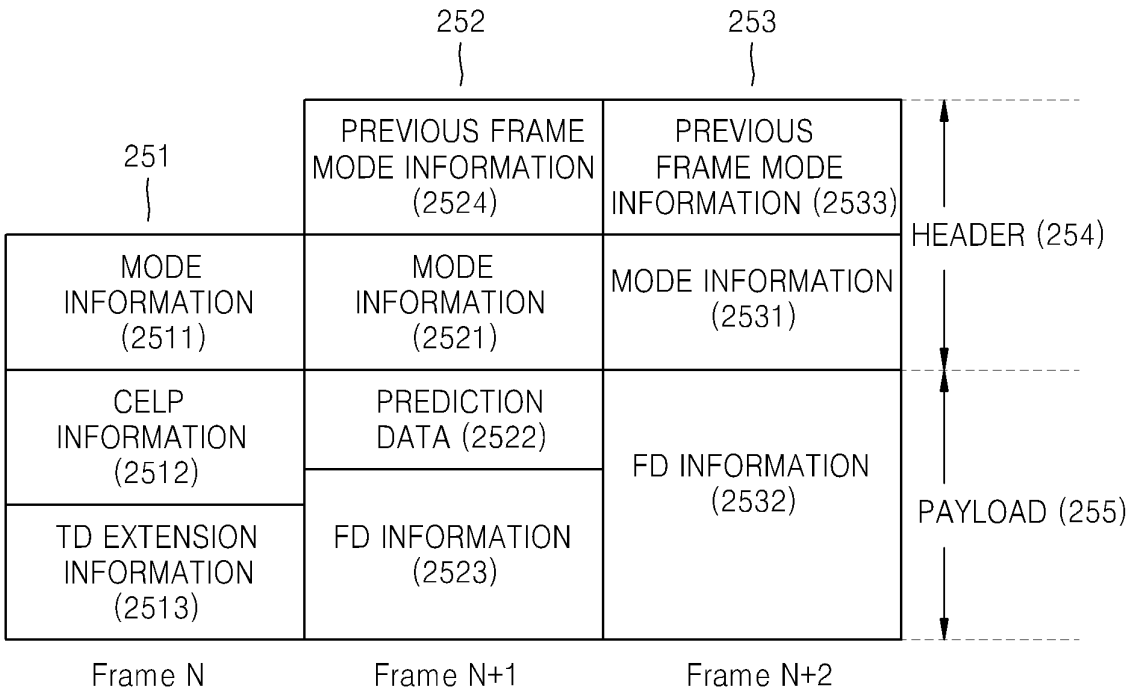
252
253
251
PREVIOUS FRAME MODE INFORMATION (2524)
PREVIOUS FRAME MODE INFORMATION (2533)
HEADER (254)
MODE INFORMATION (2511)
MODE INFORMATION (2521)
MODE INFORMATION (2531)
CELP INFORMATION (2512)
PREDICTION DATA (2522)
FD INFORMATION (2532)
PAYLOAD (255)
TD EXTENSION INFORMATION (2513)
FD INFORMATION (2523)
Frame N
Frame N+1
Frame N+2

FIG. 26

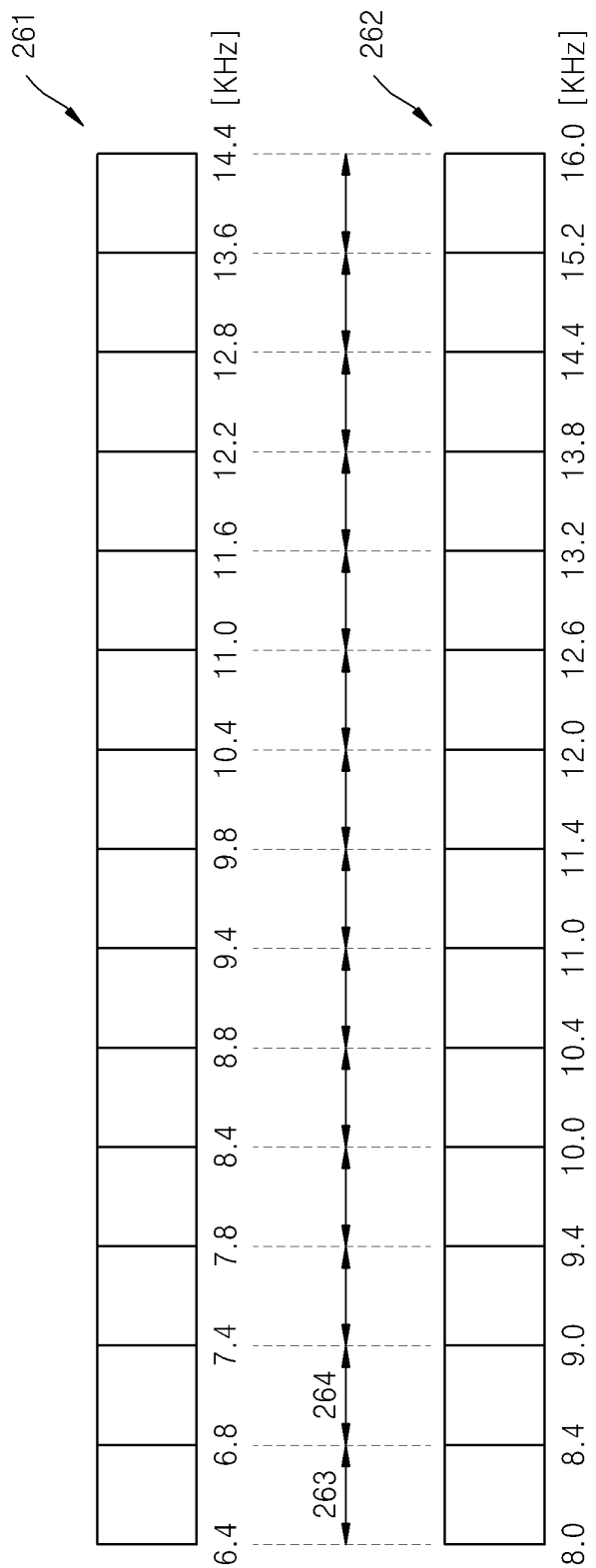
261
262
263
264
6.4
6.8
7.4
7.8
8.4
8.8
9.4
9.8
10.4
11.0
11.6
12.2
12.8
13.6
14.4 [KHz]
8.0
8.4
9.0
9.4
10.0
10.4
11.0
11.4
12.0
12.6
13.2
13.8
14.4
15.2
16.0 [KHz]

FIG. 27

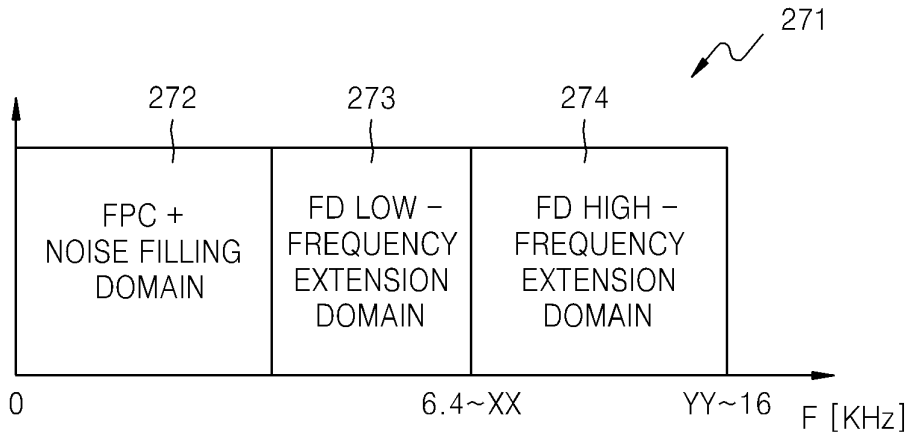
271
272
273
274
FPC + NOISE FILLING DOMAIN
FD LOW - FREQUENCY EXTENSION DOMAIN
FD HIGH - FREQUENCY EXTENSION DOMAIN
0
6.4~XX
YY~16
F [KHz]