(12) INTERNATIONAL APPLICATION PUBLISHED UNDER THE PATENT COOPERATION TREATY (PCT)

(19) World Intellectual Property Organization
International Bureau

(43) International Publication Date
15 February 2001 (15.02.2001)

PCT

(10) International Publication Number
WO 01/11786 A1

(51) International Patent Classification[7]: H03M 3/02, H03D 7/16

(21) International Application Number: PCT/US00/16076

(22) International Filing Date: 12 June 2000 (12.06.2000)

(25) Filing Language: English

(26) Publication Language: English

(30) Priority Data:
09/370,597 9 August 1999 (09.08.1999) US

(71) Applicant: ATMEL CORPORATION [US/US]; 2325 Orchard Parkway, San Jose, CA 95131 (US).

(72) Inventor: MORIN, Marc, A.; 1320 Lesli Circle, Woodland Park, CO 80863 (US).

(74) Agent: SCHNECK, Thomas; Law Offices of Thomas Schneck, P.O. Box 2-E, San Jose, CA 95109-0005 (US).

(81) Designated States *(national)*: CA, CN, JP, KR, NO, SG.

(84) Designated States *(regional)*: European patent (AT, BE, CH, CY, DE, DK, ES, FI, FR, GB, GR, IE, IT, LU, MC, NL, PT, SE).

Published:
— *With international search report.*
— *With amended claims and statement.*

For two-letter codes and other abbreviations, refer to the "Guidance Notes on Codes and Abbreviations" appearing at the beginning of each regular issue of the PCT Gazette.

(54) Title: HYBRID BANDPASS AND BASEBAND DELTA-SIGMA MODULATOR

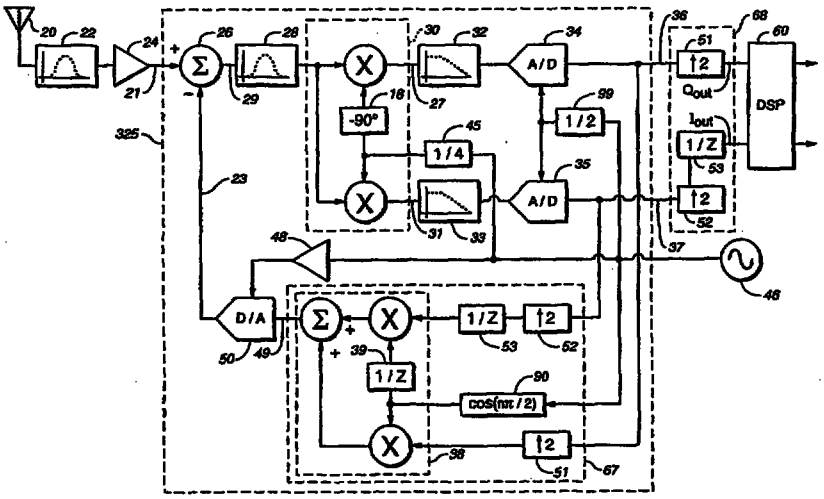

(57) Abstract: A delta-sigma modulator (325) having a downconverter mixer circuit (30) in the forward path of the modulator circuit and an upconverter mixer (38) in the feedback path of the modulator. The modulator (325) consists of a loop filter having two components, a bandpass filter (28) before the downconverter (30) and a low-pass filter (32, 33) after the down-converter. The mixer circuits can be implemented as single-sideband rejection mixers with in-phase and quadrature paths. In such a modulator, the loop filter component after the quadrature mixer include two low-pass filters (32, 33), one for the in-phase forward path and another for the quadrature forward path. The feedback also has two paths, which are recombined in the quadrature upconverter (38) located prior to the DAC (50) which produces a real, analog signal (23) to be fed back to the input. Multiple arrangements of this type of modulator can be implemented, including arrangements having multiple intermediate feedback paths to both the baseband low-pass filter and the bandpass loop filter sections.

WO 01/11786 A1