(12) INTERNATIONAL APPLICATION PUBLISHED UNDER THE PATENT COOPERATION TREATY (PCT)

(19) World Intellectual Property Organization
International Bureau

(43) International Publication Date
22 July 2010 (22.07.2010)

PCT

(10) International Publication Number
WO 2010/082062 A3

(51) International Patent Classification:
G10K 11/20 (2006.01)

(21) International Application Number:
PCT/GB2010/050058

(22) International Filing Date:
15 January 2010 (15.01.2010)

(25) Filing Language: English

(26) Publication Language: English

(30) Priority Data:
0900668.5 16 January 2009 (16.01.2009) GB

(71) Applicant *(for all designated States except US)*: **SUB-SEA ASSET LOCATION TECHNOLOGIES LIMITED** [GB/GB]; Unit 2, Renshaw Barn, Upper Woodford, Salisbury, Wiltshire SP4 6FA (GB).

(72) Inventors; and

(75) Inventors/Applicants *(for US only)*: **TILTMAN, Carl Peter** [GB/GB]; 41 Goldcroft Road, Weymouth, Dorset DT4 0EA (GB). **TULLOCH, Andrew Malcolm** [GB/GB]; 20 Chamberlain Gardens, Arborfield Cross, Reading, Berkshire RG2 9QA (GB).

(74) Agent: **BECKHAM, Robert William**; Gatehouse, Lake Road, Portishead, Bristol, Avon BS20 7JA (GB).

(81) Designated States *(unless otherwise indicated, for every kind of national protection available)*: AE, AG, AL, AM, AO, AT, AU, AZ, BA, BB, BG, BH, BR, BW, BY, BZ, CA, CH, CL, CN, CO, CR, CU, CZ, DE, DK, DM, DO, DZ, EC, EE, EG, ES, FI, GB, GD, GE, GH, GM, GT, HN, HR, HU, ID, IL, IN, IS, JP, KE, KG, KM, KN, KP, KR, KZ, LA, LC, LK, LR, LS, LT, LU, LY, MA, MD, ME, MG, MK, MN, MW, MX, MY, MZ, NA, NG, NI, NO, NZ, OM, PE, PG, PH, PL, PT, RO, RS, RU, SC, SD, SE, SG, SK, SL, SM, ST, SV, SY, TH, TJ, TM, TN, TR, TT, TZ, UA, UG, US, UZ, VC, VN, ZA, ZM, ZW.

(84) Designated States *(unless otherwise indicated, for every kind of regional protection available)*: ARIPO (BW, GH, GM, KE, LS, MW, MZ, NA, SD, SL, SZ, TZ, UG, ZM, ZW), Eurasian (AM, AZ, BY, KG, KZ, MD, RU, TJ, TM), European (AT, BE, BG, CH, CY, CZ, DE, DK, EE, ES, FI, FR, GB, GR, HR, HU, IE, IS, IT, LT, LU, LV, MC, MK, MT, NL, NO, PL, PT, RO, SE, SI, SK, SM, TR), OAPI (BF, BJ, CF, CG, CI, CM, GA, GN, GQ, GW, ML, MR, NE, SN, TD, TG).

Published:

— *with international search report (Art. 21(3))*

— *before the expiration of the time limit for amending the claims and to be republished in the event of receipt of amendments (Rule 48.2(h))*

(88) Date of publication of the international search report:
24 March 2011

(54) Title: ACOUSTIC MARKERS

Fig.4.

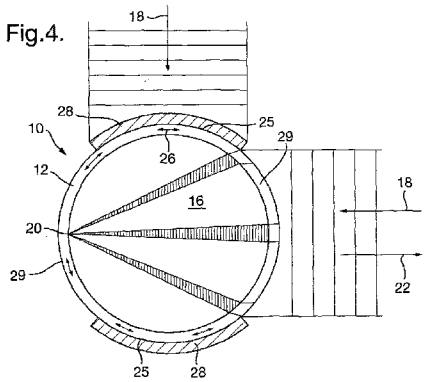

(57) Abstract: An acoustic reflector is described comprising a shell around a core, in which portions of the shell are capable of transmitting acoustic waves incident on the shell into the core to be focused and reflected from an area of the shell located opposite to the area of incidence of the acoustic waves to provide a reflected acoustic signal output from the reflector. Incident acoustic radiation will be differentially reflected depending on the portion of the reflector on which the incident acoustic radiation impinges.

WO 2010/082062 A3