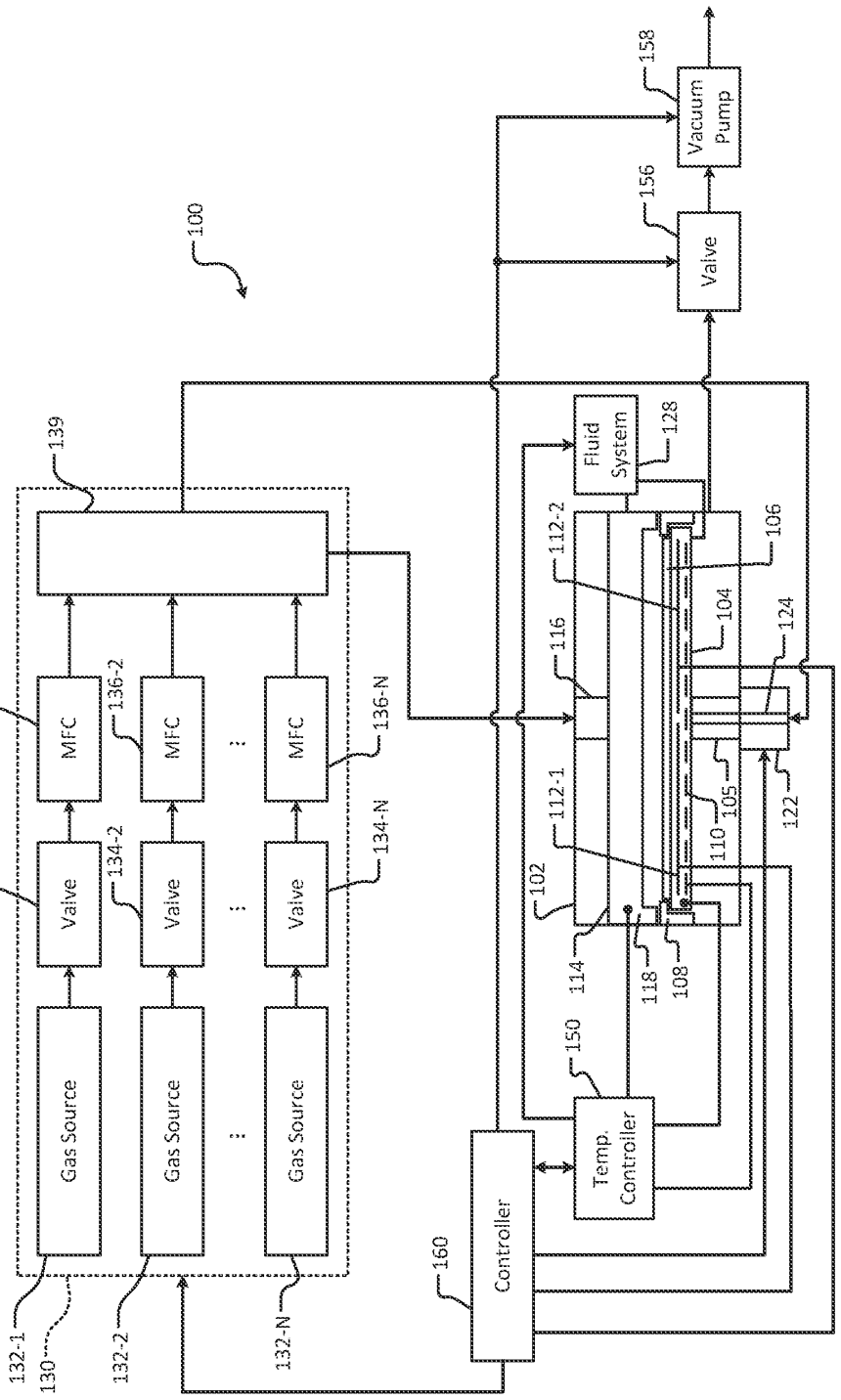
100
139
136-1
136-2
136-N
MFC
MFC
MFC
134-1
134-2
134-N
Valve
Valve
Valve
Gas Source
Gas Source
Gas Source
132-1
130
132-2
132-N
160
Controller
Temp. Controller
150
Fluid System
128
158
Vacuum Pump
156
Valve
112-2
112-1
116
102
114
118
108
106
104
105
110
122
124

FIG. 1A

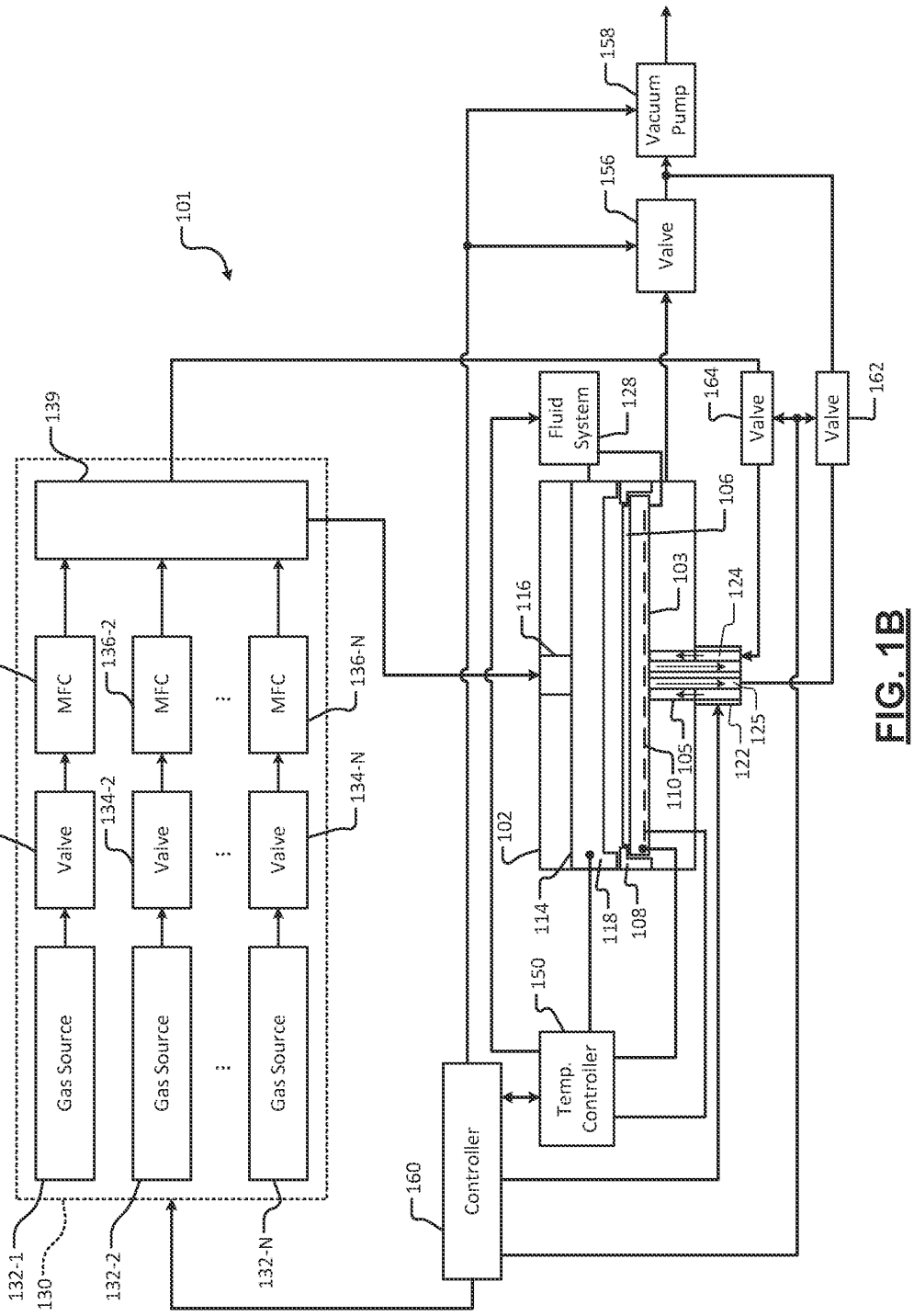
101
139
136-1
136-2
136-N
MFC
MFC
MFC
134-1
134-2
134-N
Valve
Valve
Valve
Gas Source
Gas Source
Gas Source
132-1
130
132-2
132-N
160
Controller
150
Temp. Controller
102
114
118
108
116
Fluid System
128
106
103
124
105
110
122
125
164
Valve
Valve
162
156
Valve
158
Vacuum Pump

FIG. 1B

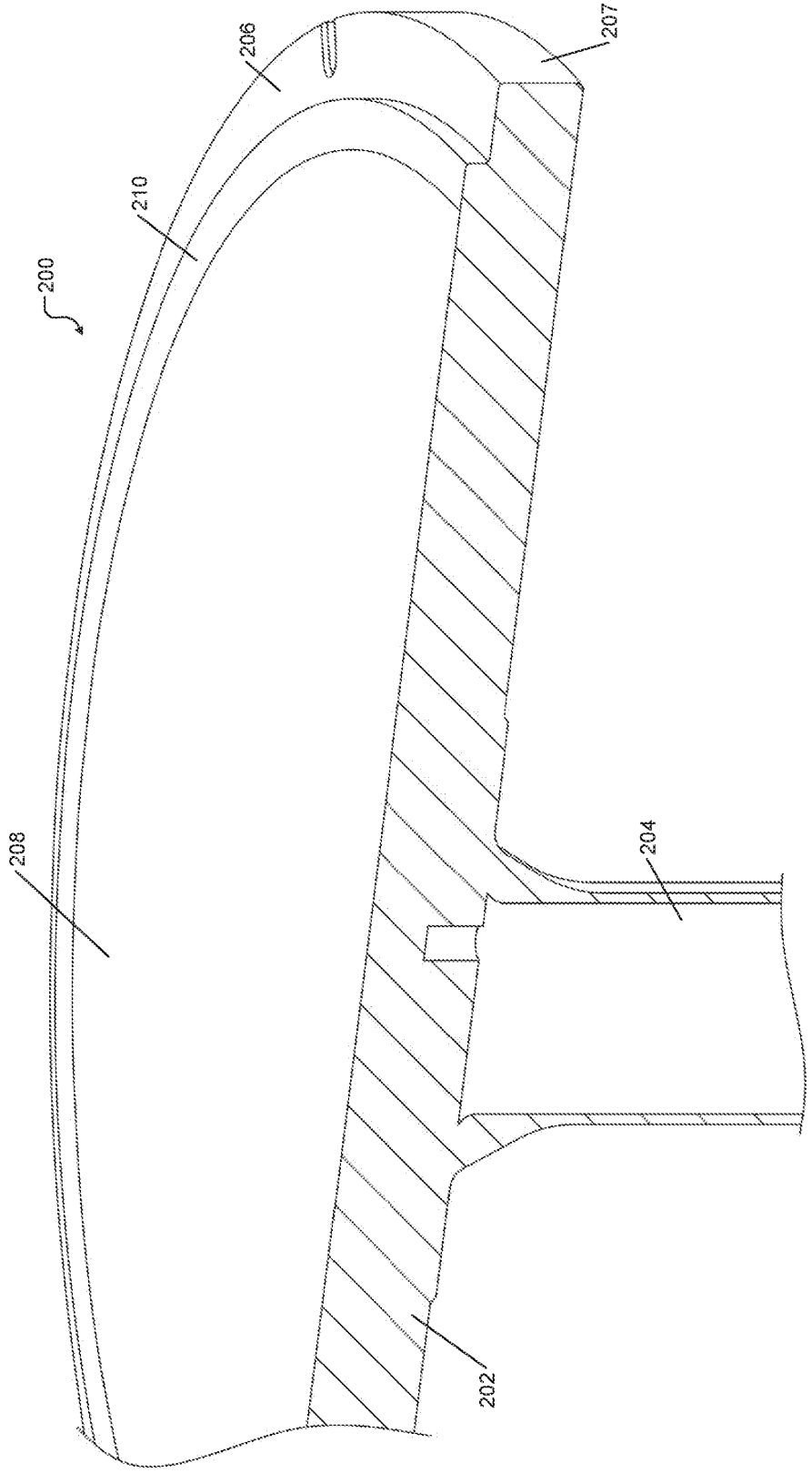

FIG. 2

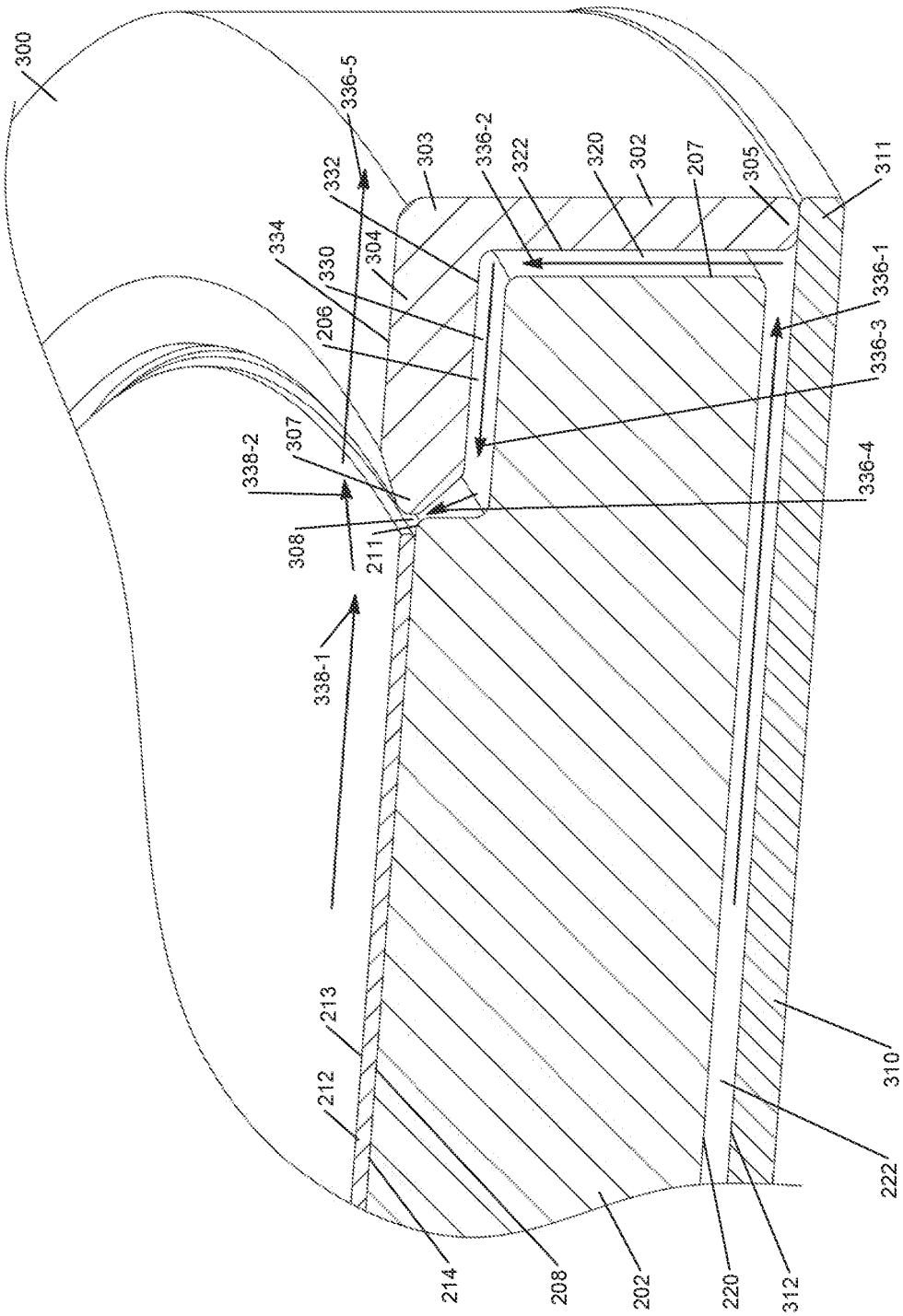
300
336-5
303
336-2
322
320
302
207
305
311
332
334
330
304
206
336-1
336-3
307
338-2
336-4
308
211
338-1
213
212
310
222
214
208
202
220
312

FIG. 3

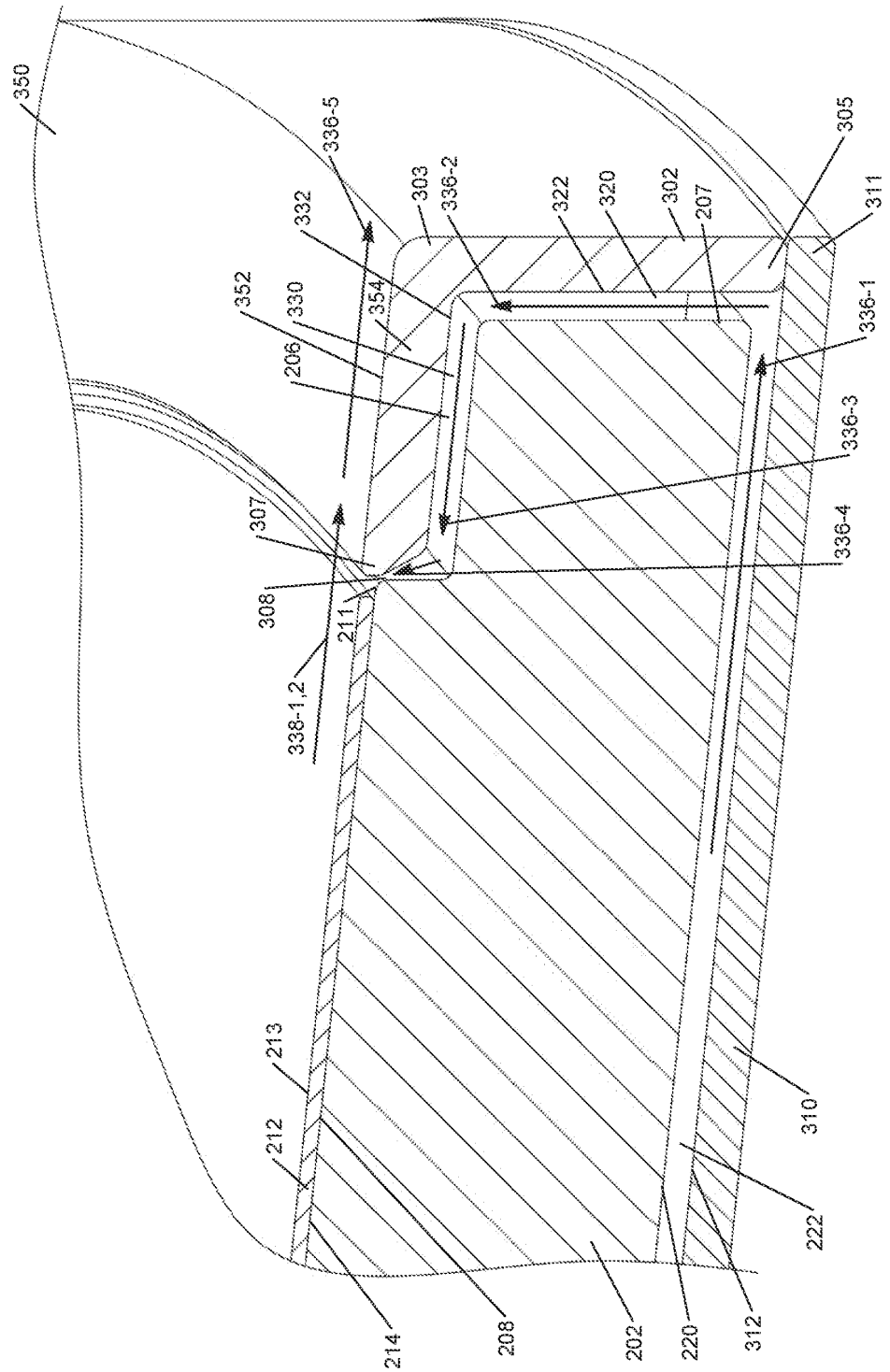
350
336-5
303
336-2
332
322
320
302
207
305
311
352
330
354
206
336-1
336-3
307
336-4
308
211
338-1,2
213
212
310
222
214
208
202
220
312

FIG. 4

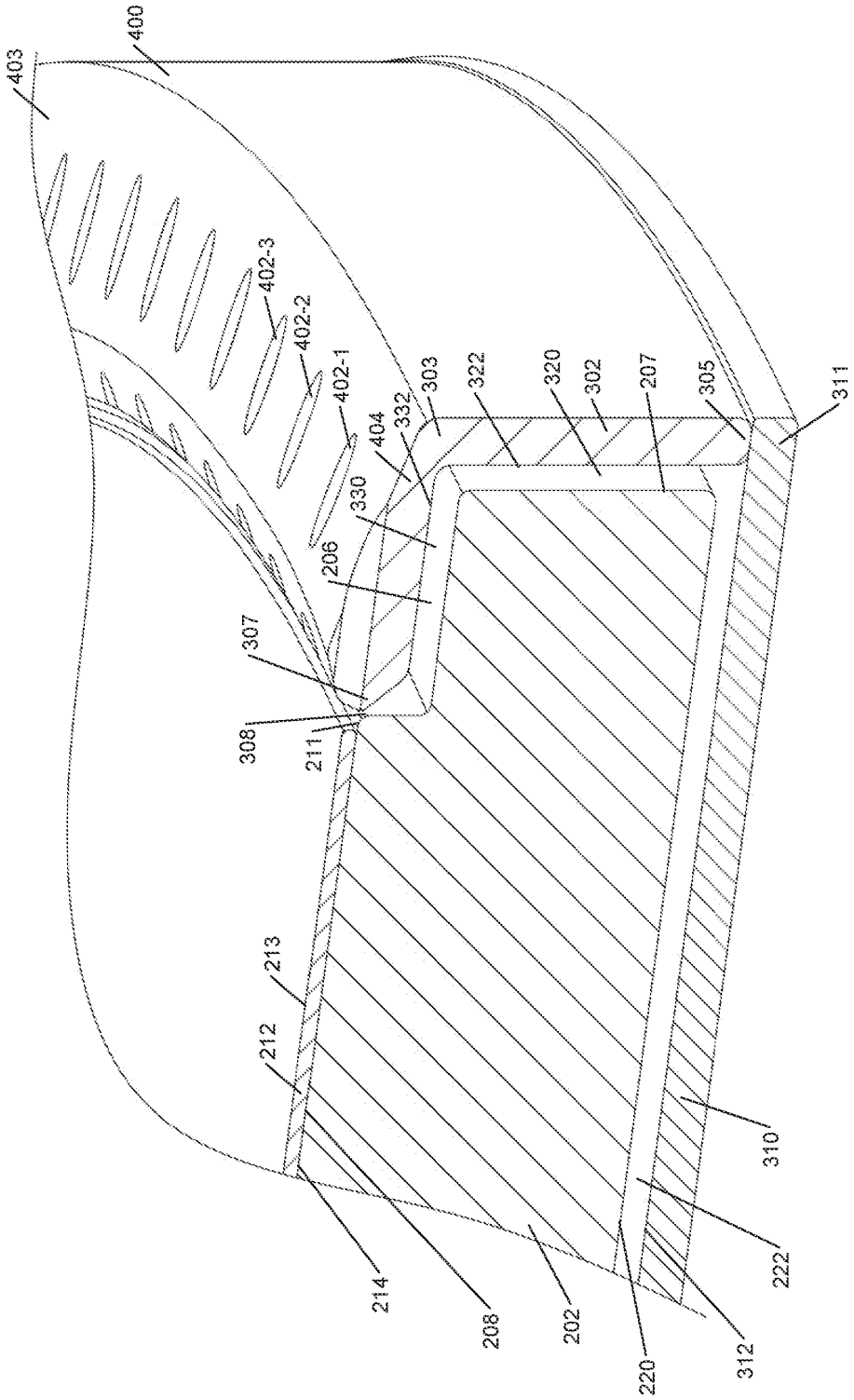
403
400
402-3
402-2
402-1
303
322
320
302
207
305
311
332
404
330
206
307
308
211
213
212
214
208
202
220
312
222
310

FIG. 5A

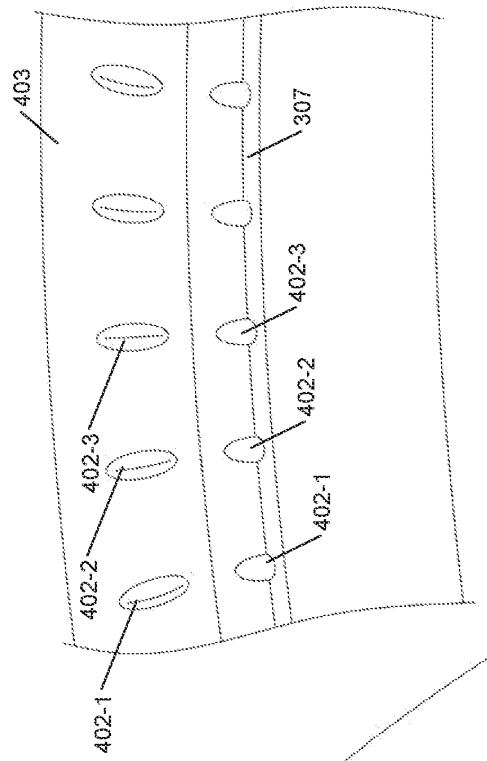
403
307
402-3
402-2
402-1
402-3
402-2
402-1

FIG. 5C

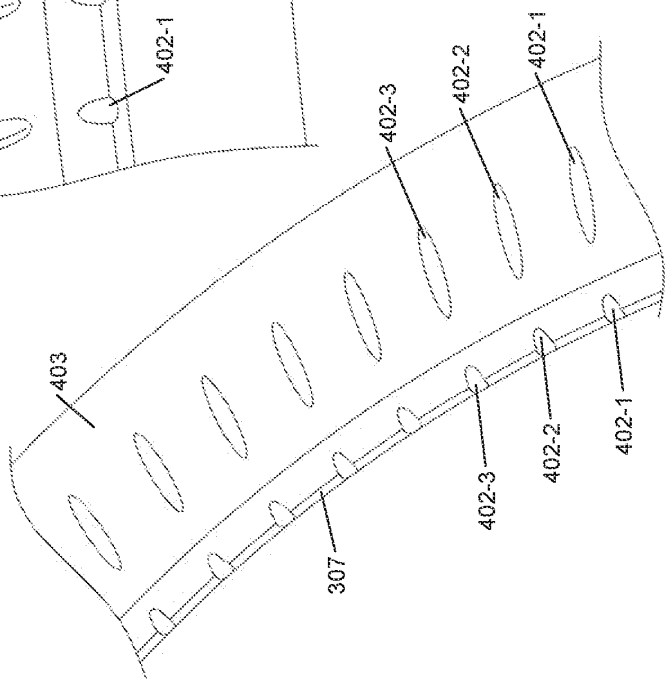
403
402-3
402-2
402-1
307
402-3
402-2
402-1

FIG. 5B

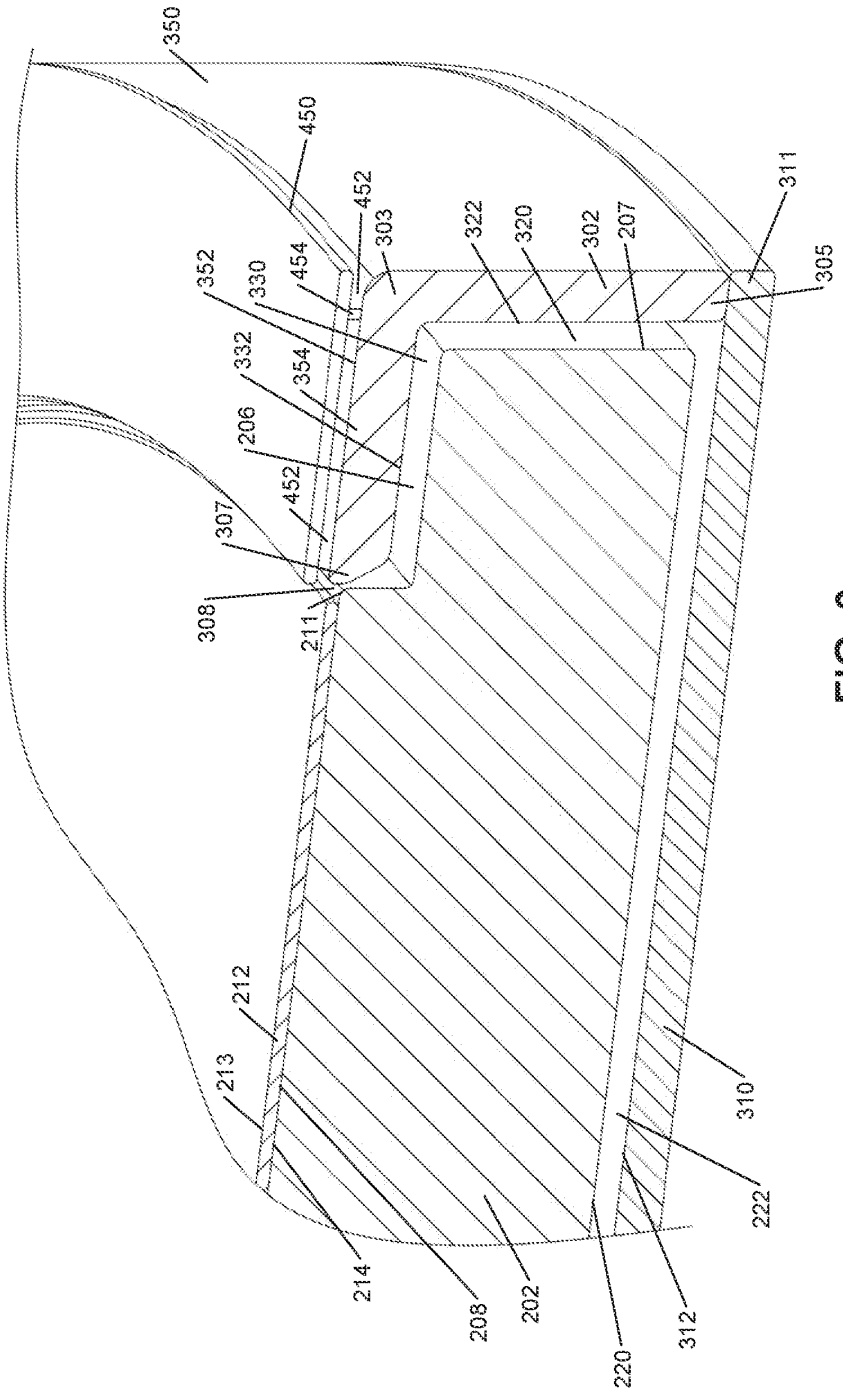
350
450
452
303
322
320
302
207
311
305
352
330
454
332
354
206
452
307
308
211
212
213
214
208
202
220
312
310
222

FIG. 6

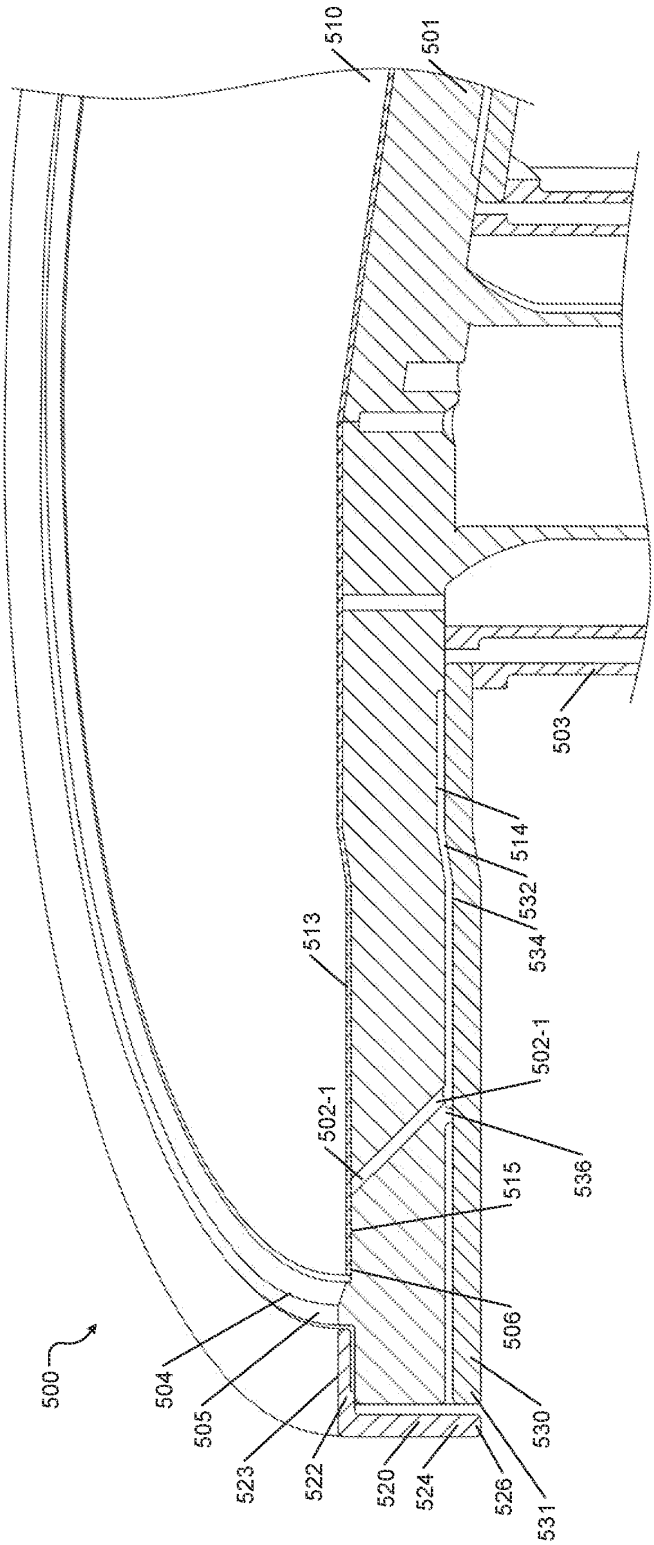
510
501
503
514
532
534
513
502-1
502-1
536
515
506
530
500
504
505
523
522
520
524
526
531

FIG. 7A

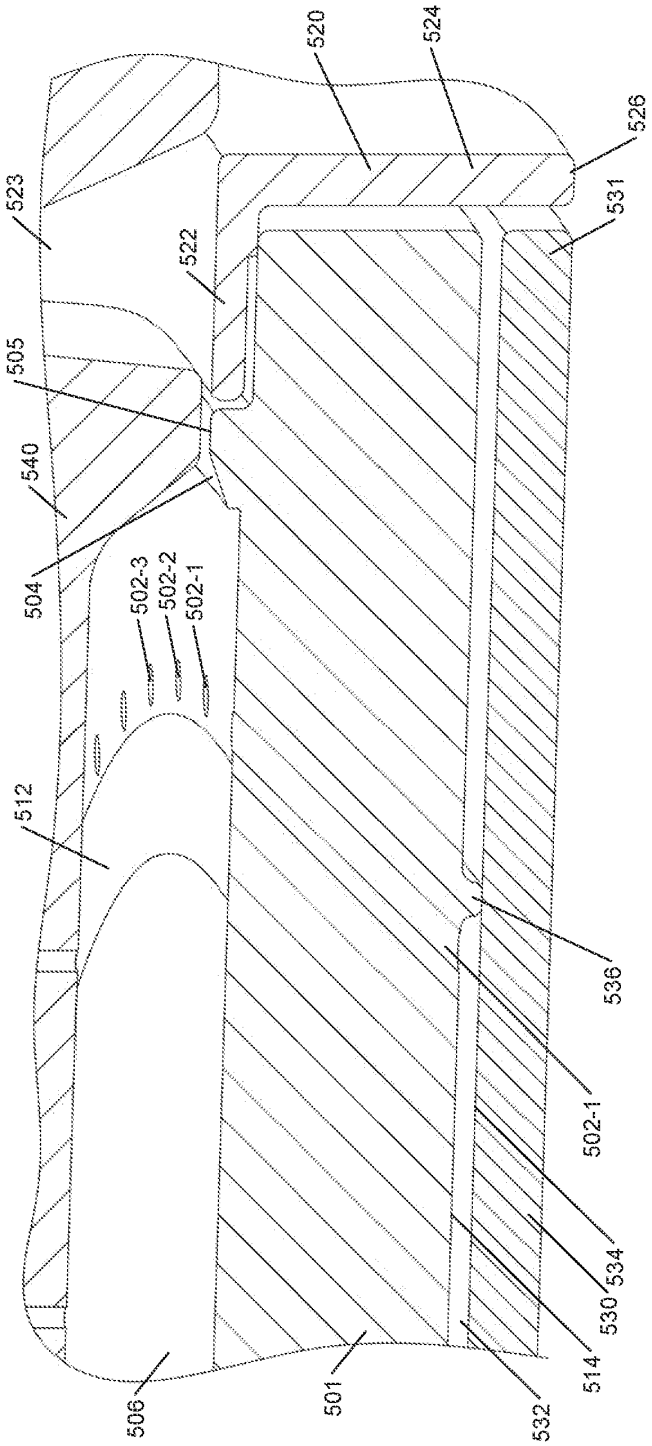
520
524
526
523
531
522
505
540
504
502-3
502-2
502-1
512
536
502-1
534
530
514
506
501
532

FIG. 7B

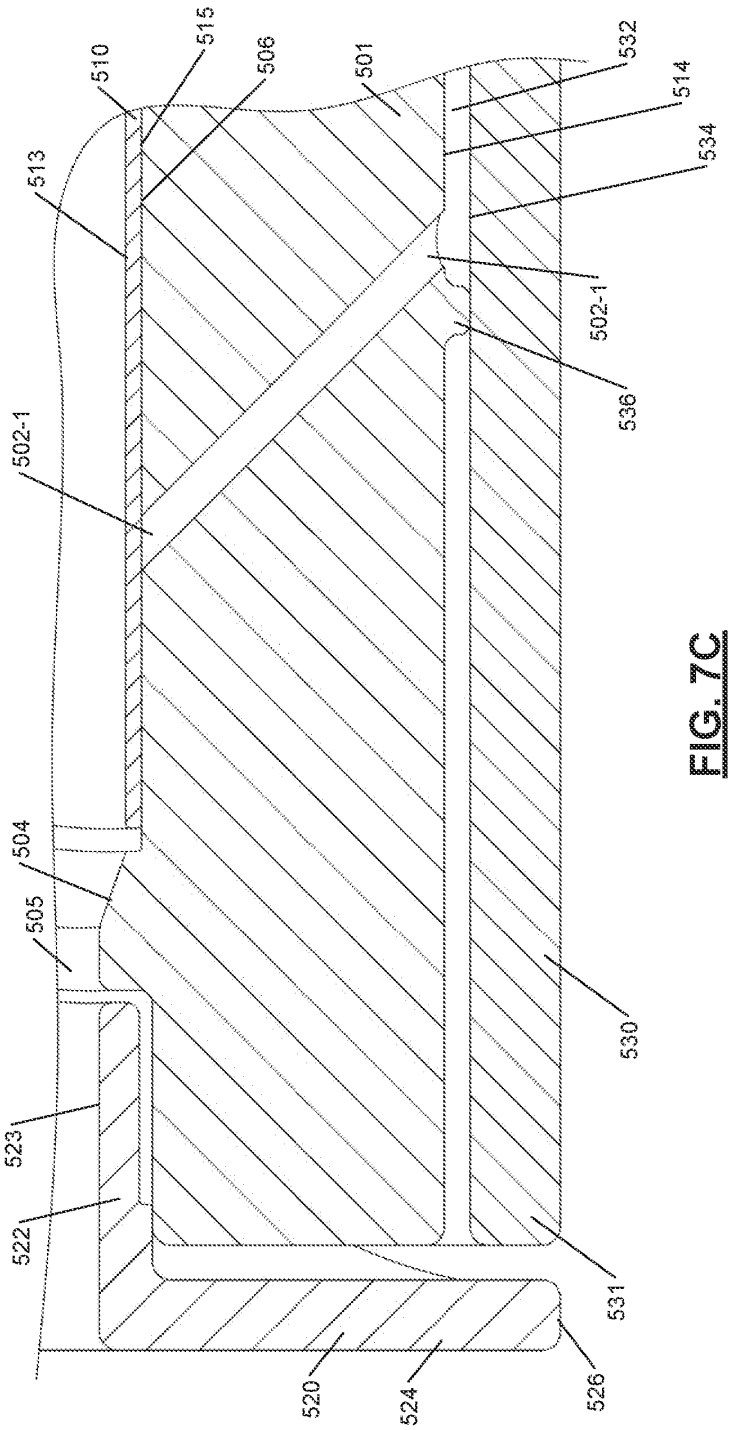
515
510
506
501
532
514
534
513
502-1
536
502-1
504
505
530
523
522
531
520
524
526

FIG. 7C

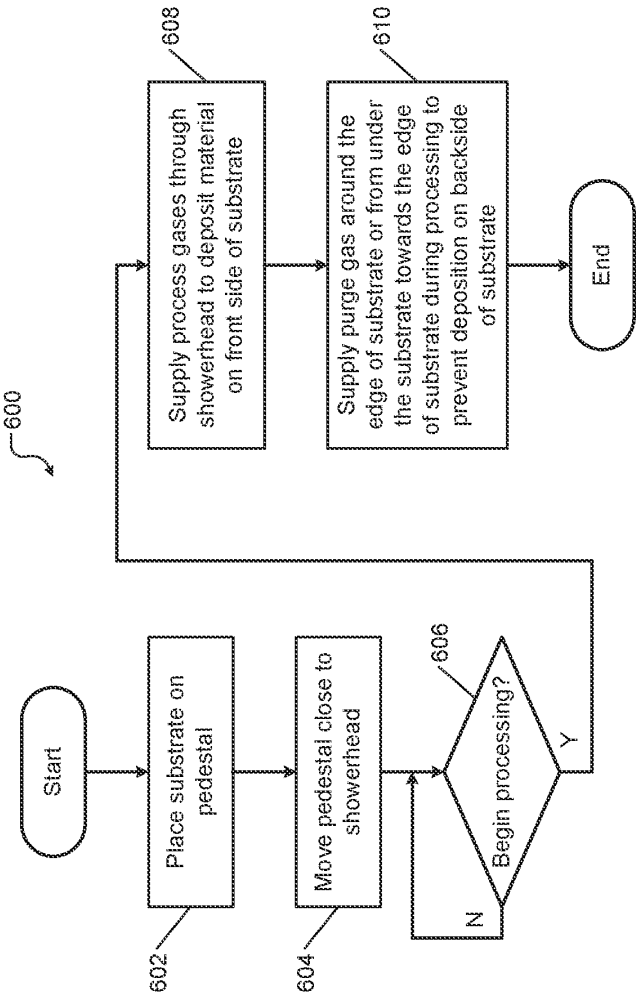
600
Start
Place substrate on pedestal
602
Move pedestal close to showerhead
604
606
Begin processing?
N
Y
Supply process gases through showerhead to deposit material on front side of substrate
608
Supply purge gas around the edge of substrate or from under the substrate towards the edge of substrate during processing to prevent deposition on backside of substrate
610
End

FIG. 8

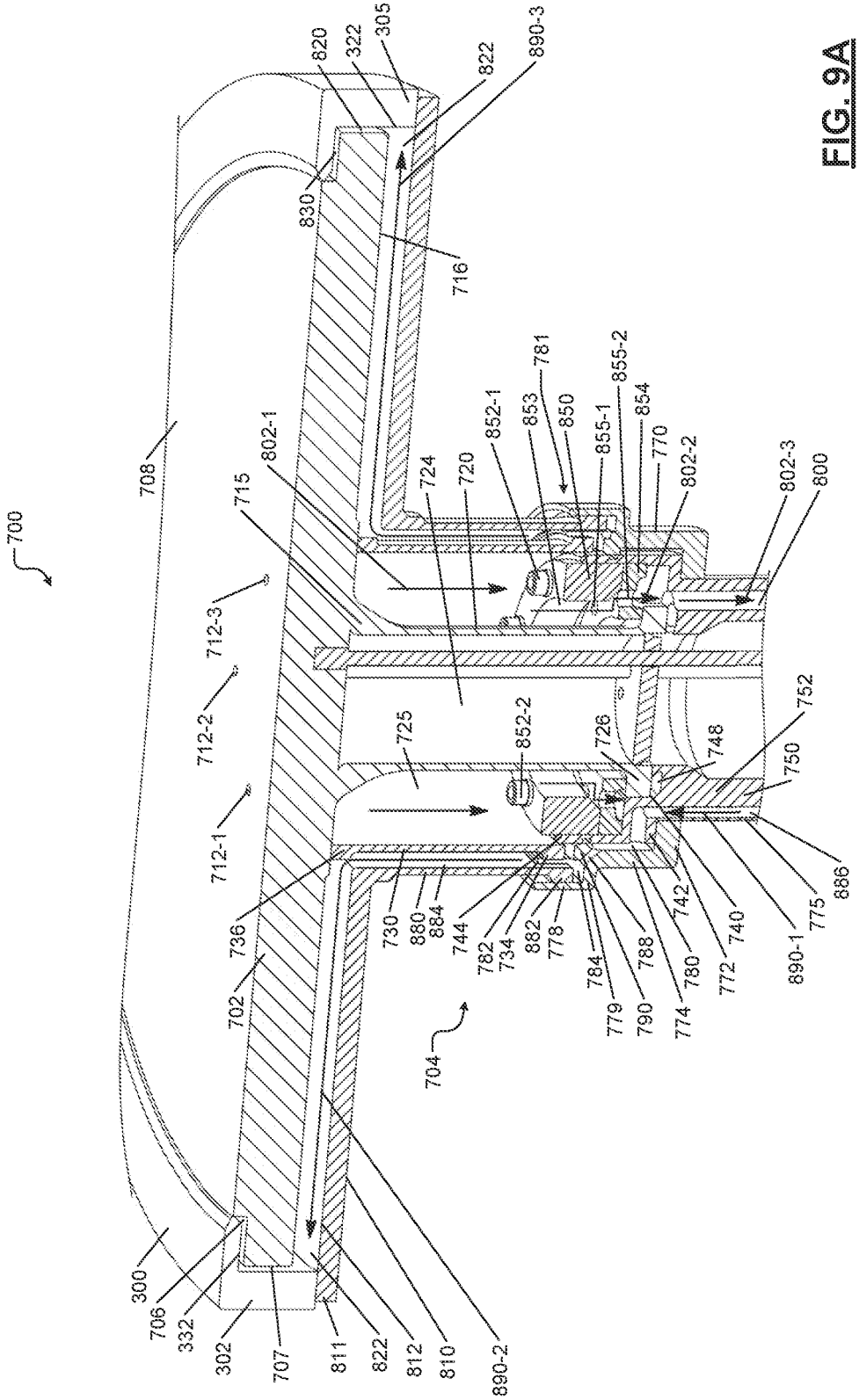
700
708
715
802-1
712-3
712-2
712-1
724
720
852-1
853
781
850
855-1
855-2
854
770
802-2
802-3
800
725
852-2
726
748
752
750
886
775
890-1
740
772
742
780
774
788
790
779
784
778
882
734
782
744
884
880
730
736
702
704
820
322
305
822
890-3
830
716
300
706
332
302
707
811
822
812
810
890-2

FIG. 9A

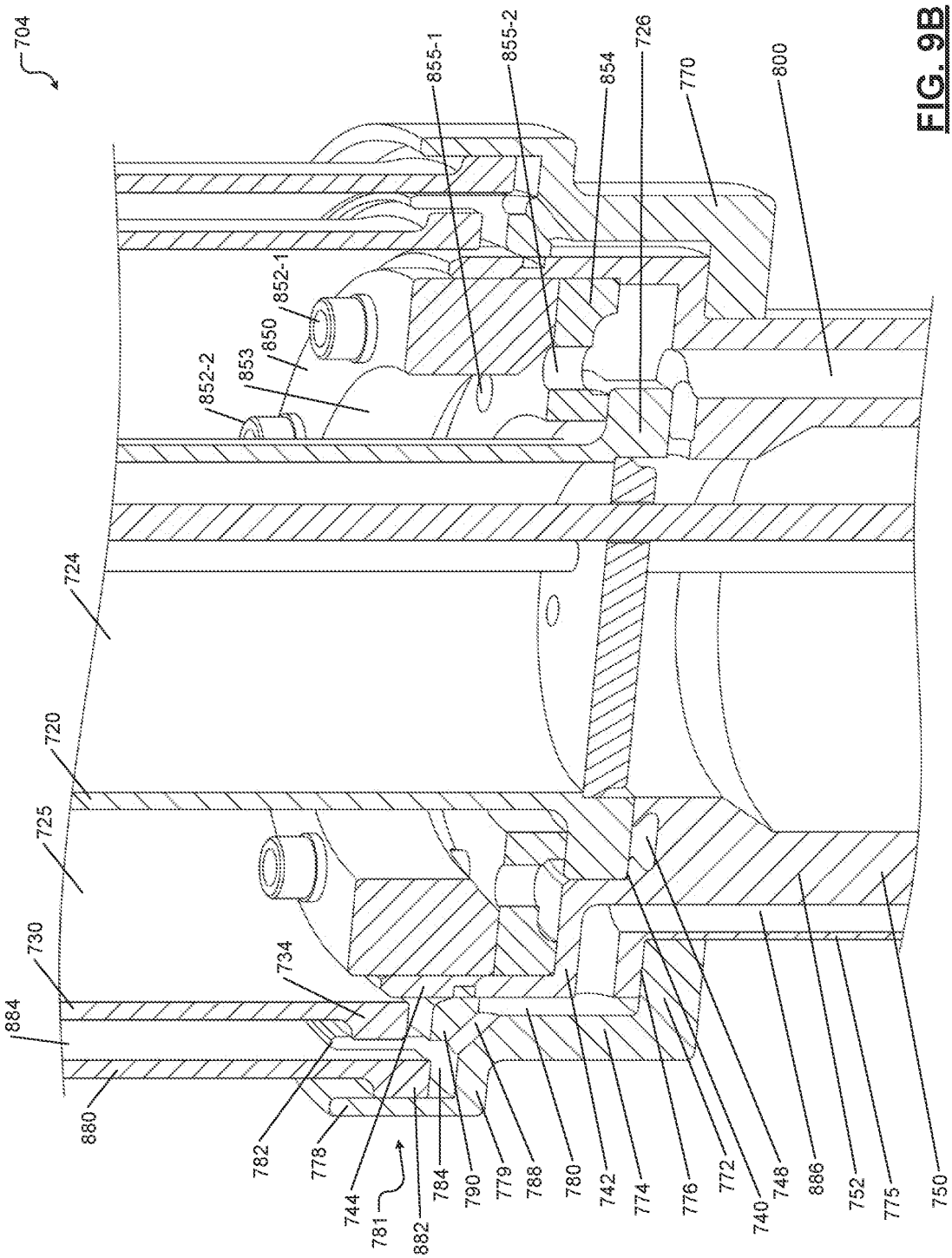
704
855-1
855-2
854
726
770
800
852-1
850
853
852-2
724
720
725
730
734
884
880
782
778
744
781
882
784
790
779
788
780
742
774
776
772
740
748
886
752
775
750

FIG. 9B

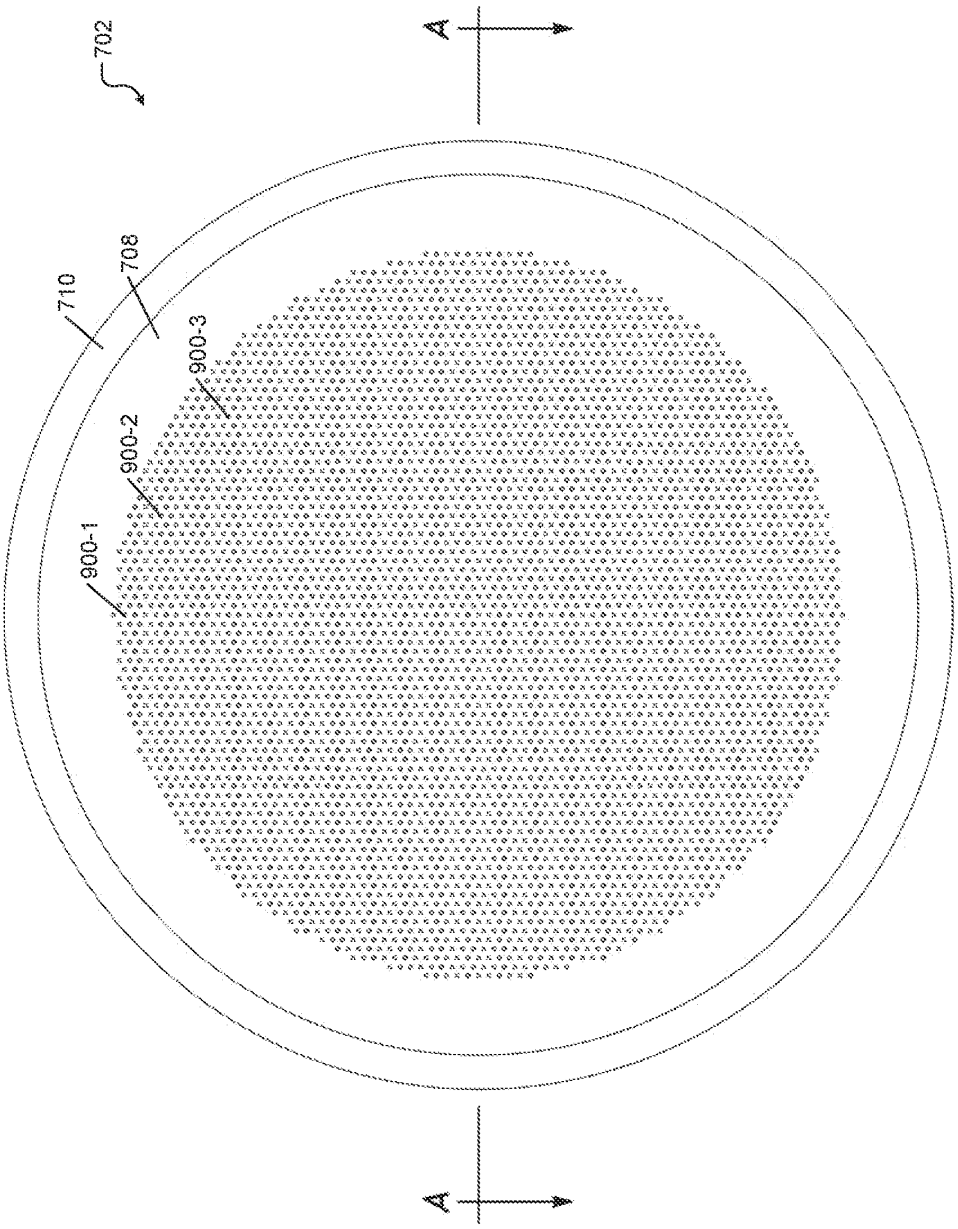

FIG. 10A

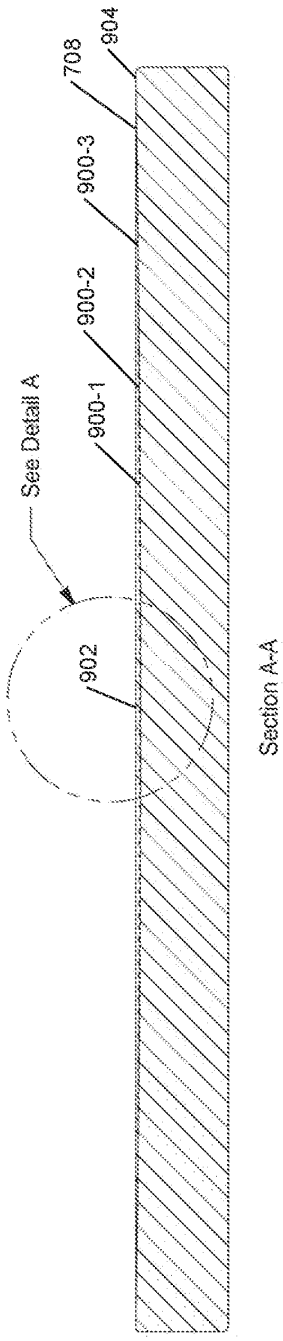

FIG. 10B

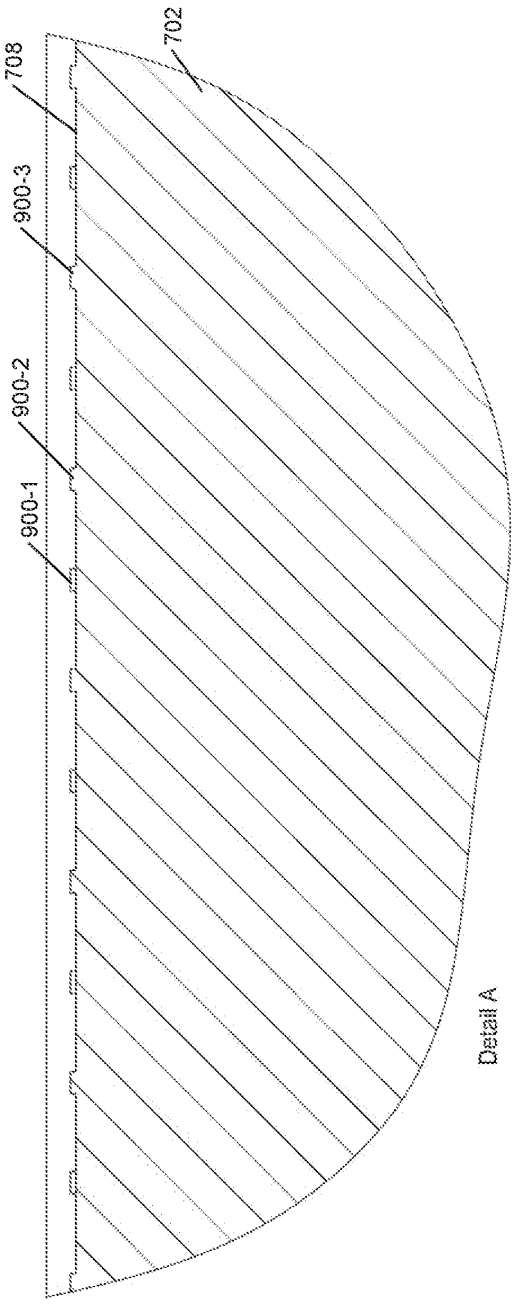

FIG. 10C

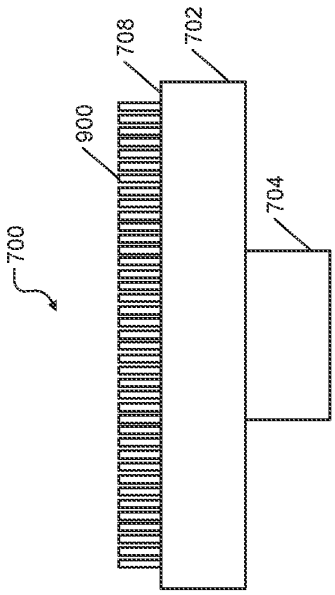

FIG. 11A

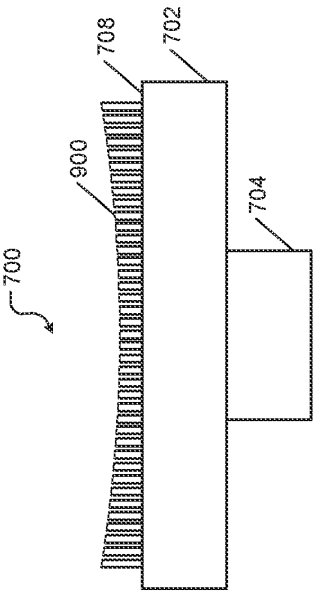

FIG. 11C

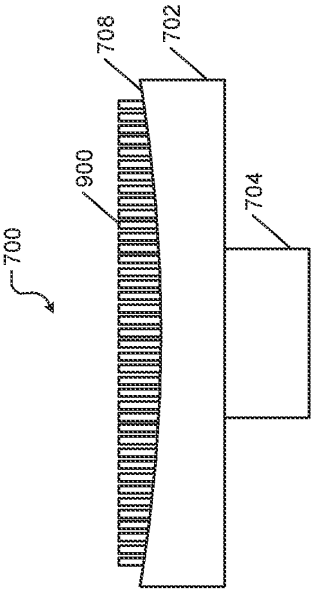

FIG. 11B

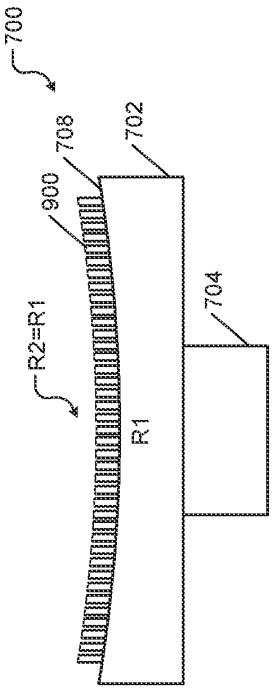

FIG. 11D

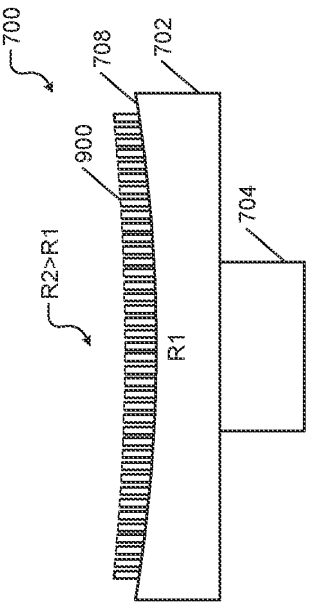

FIG. 11F

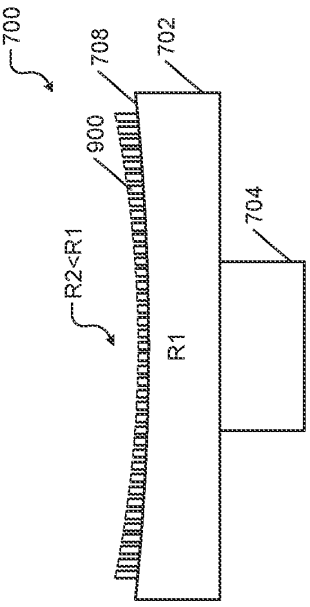

FIG. 11E

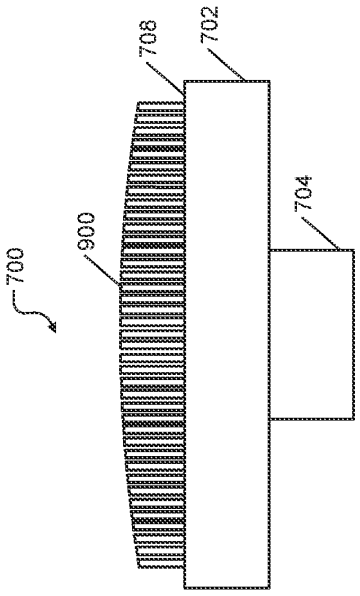

FIG. 12B

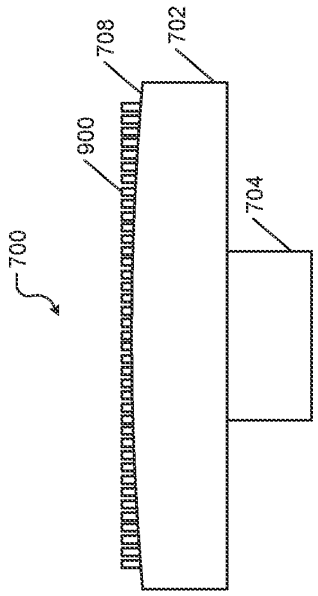

FIG. 12A

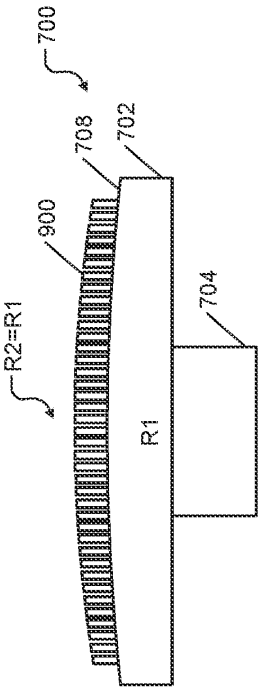

FIG. 12C

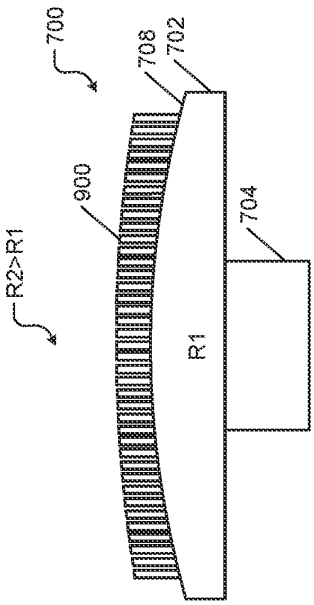

FIG. 12E

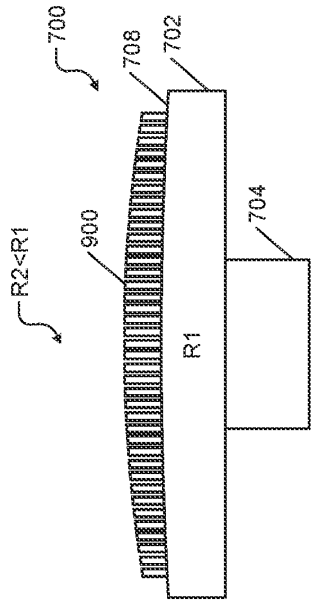

FIG. 12D