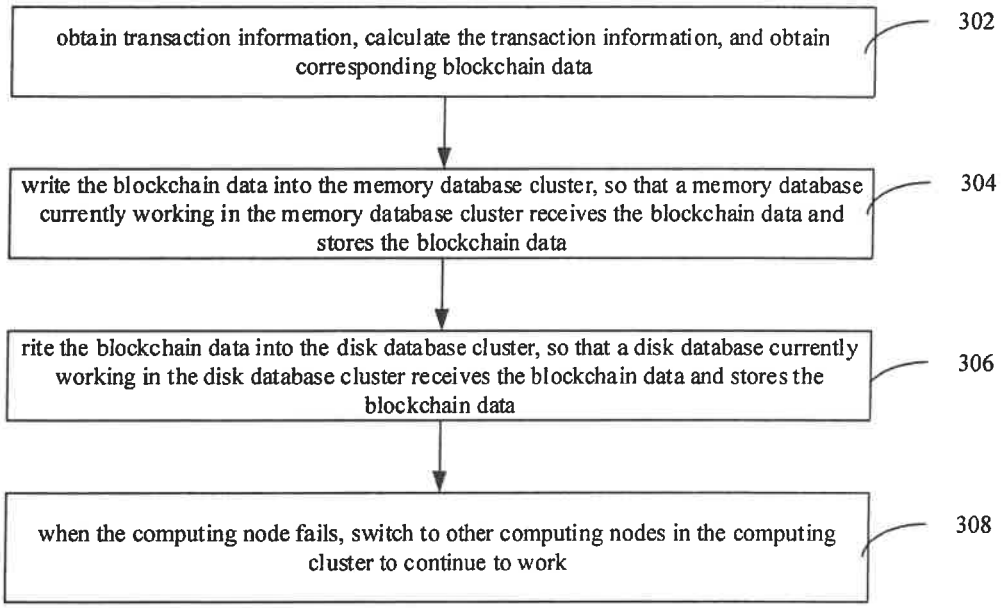
obtain transaction information, calculate the transaction information, and obtain corresponding blockchain data
302
write the blockchain data into the memory database cluster, so that a memory database currently working in the memory database cluster receives the blockchain data and stores the blockchain data
304
rite the blockchain data into the disk database cluster, so that a disk database currently working in the disk database cluster receives the blockchain data and stores the blockchain data
306
when the computing node fails, switch to other computing nodes in the computing cluster to continue to work
308

FIG. 3

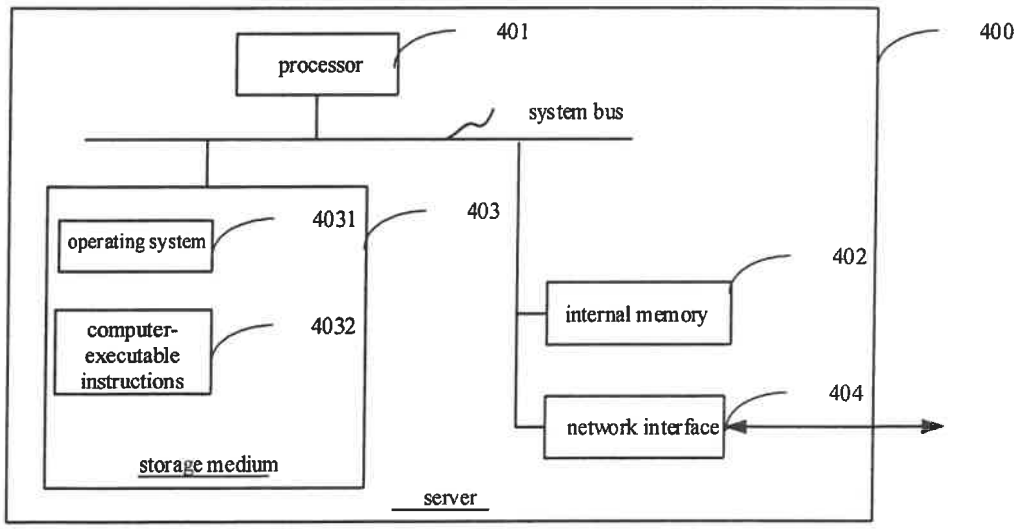
400
401
processor
system bus
403
4031
operating system
4032
computer-executable instructions
storage medium
402
internal memory
404
network interface
server

FIG. 4