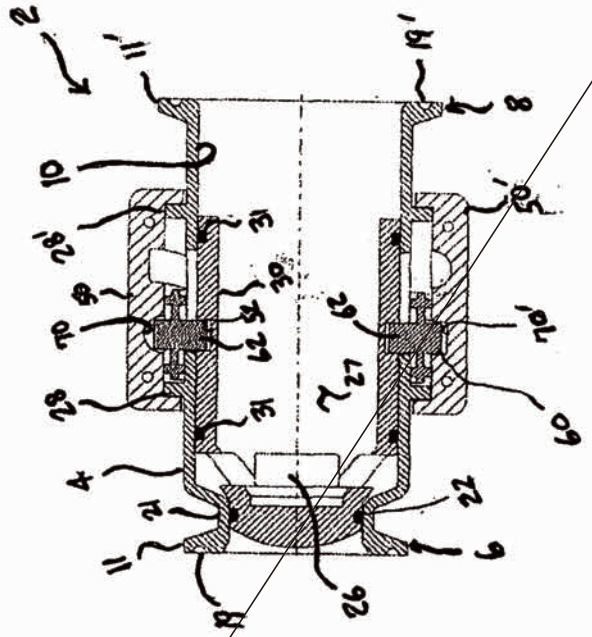

FIG. 1

FIG. 2

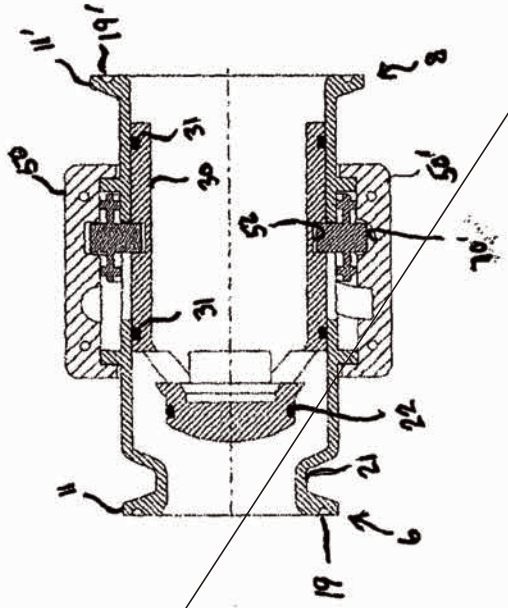

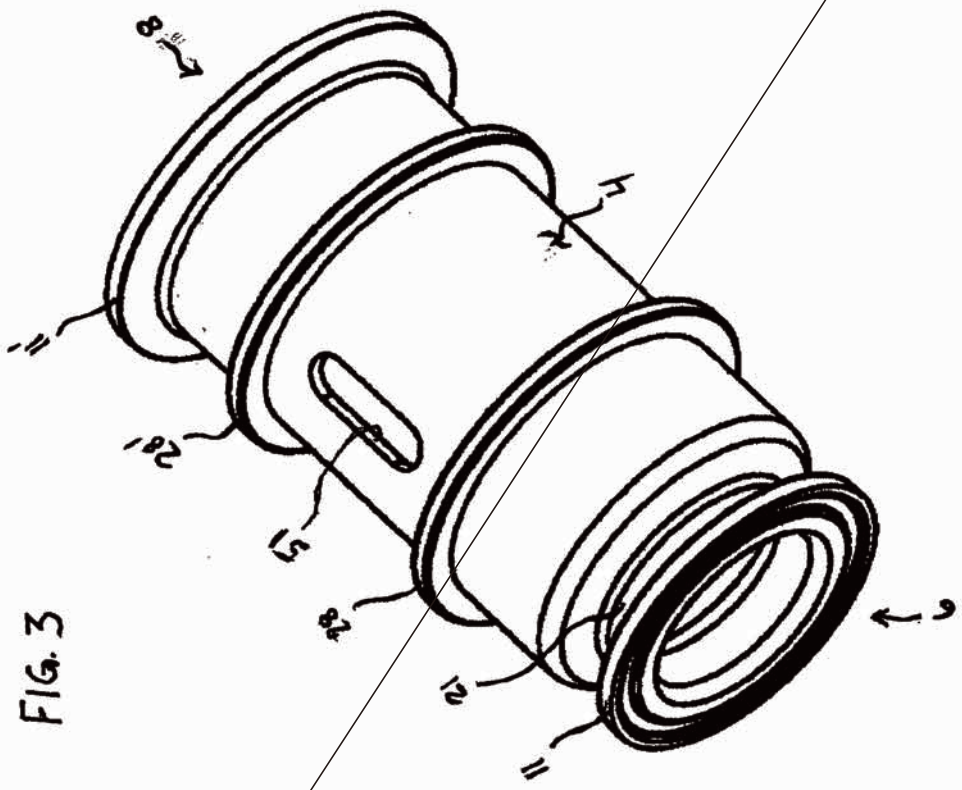

FIG. 3

FIG. 4

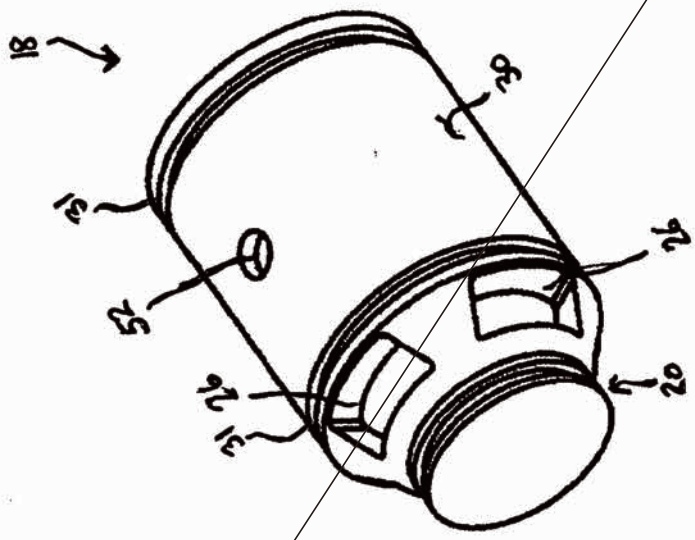

FIG. 4A

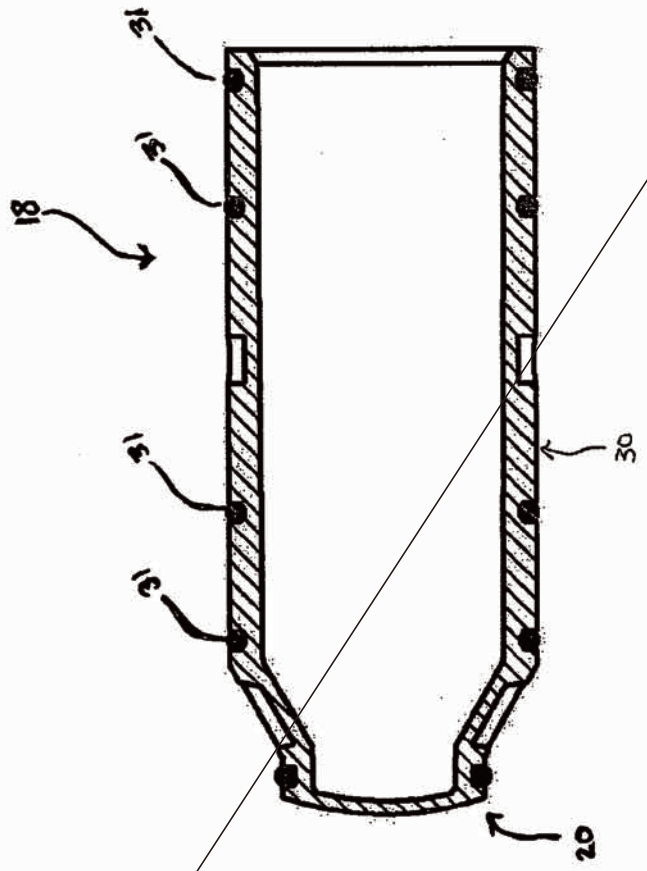

FIG. 5

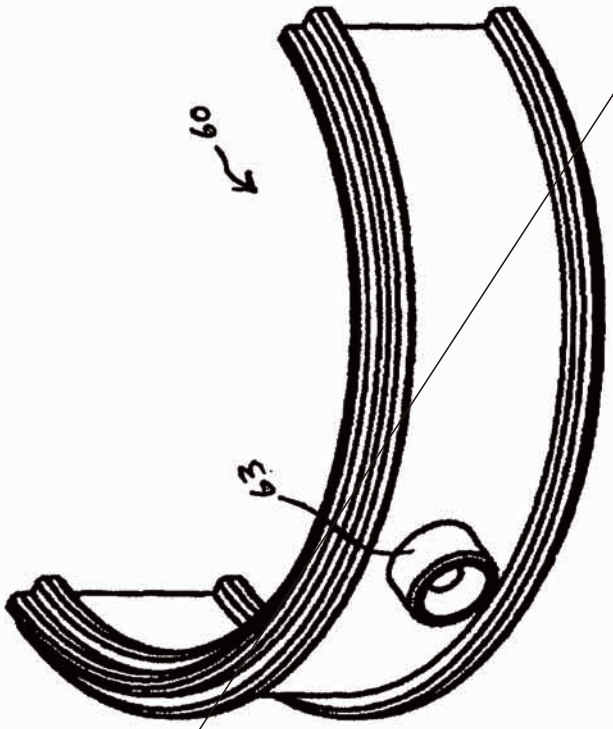

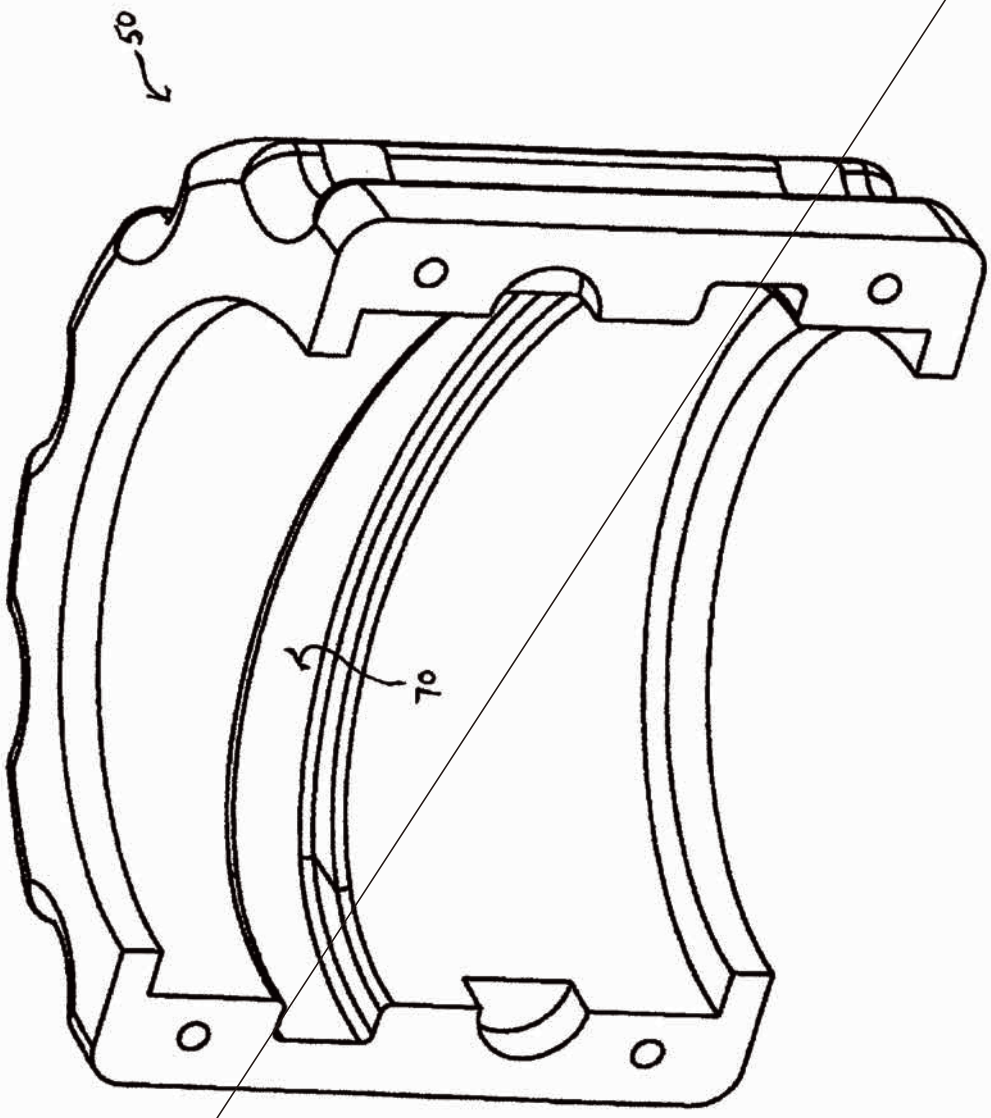

FIG. 6

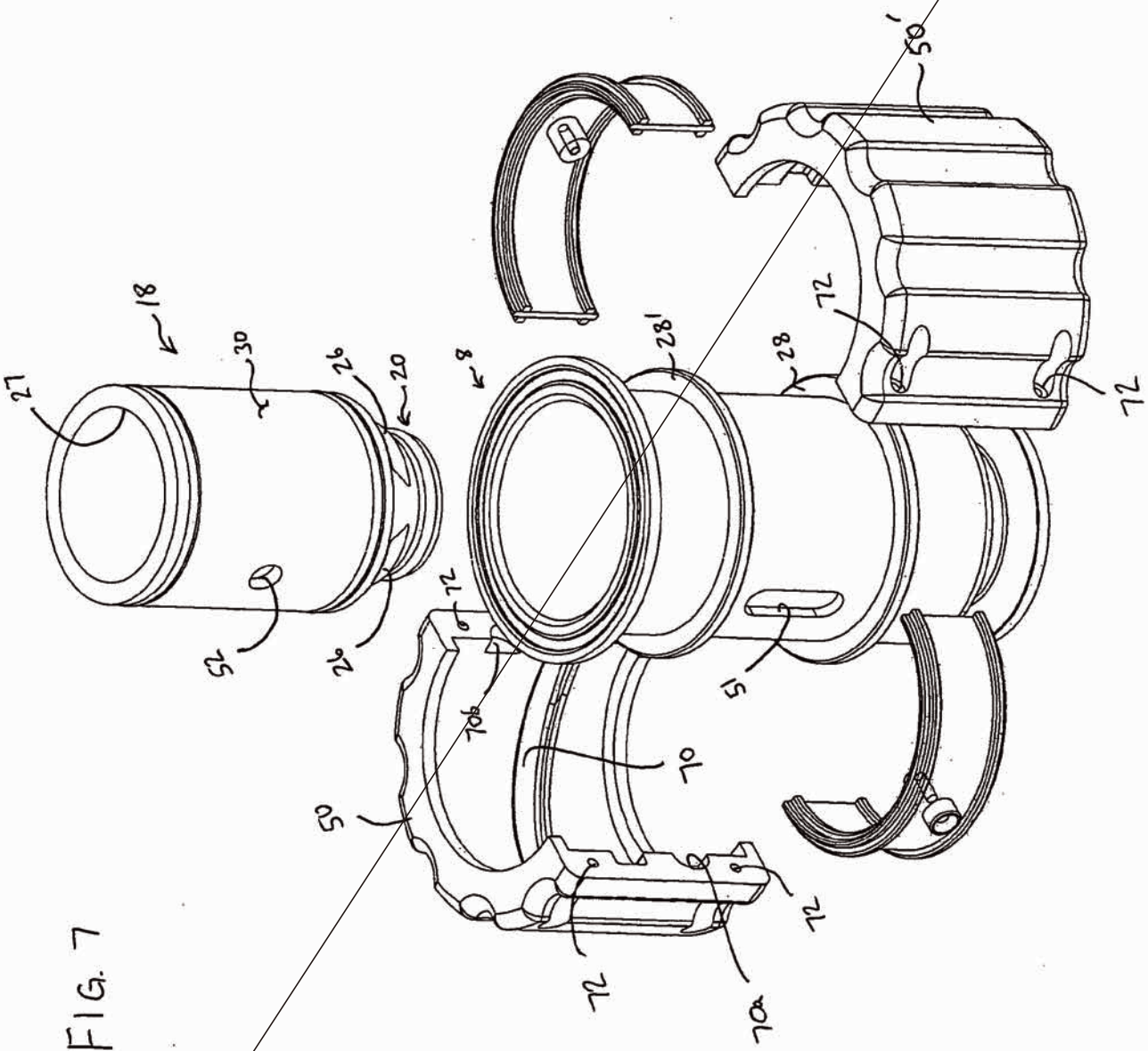
18
27
30
26
20
8
28'
28
72
50'
52
24
22
70
50
70a
72
72
72

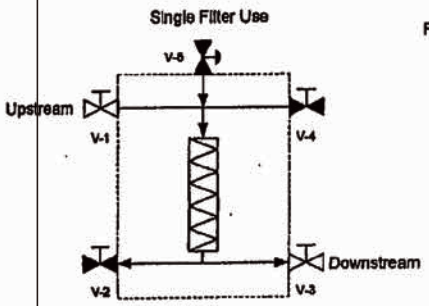

FIG. 8A

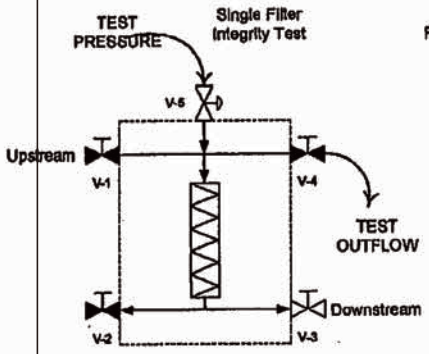

FIG. 8B

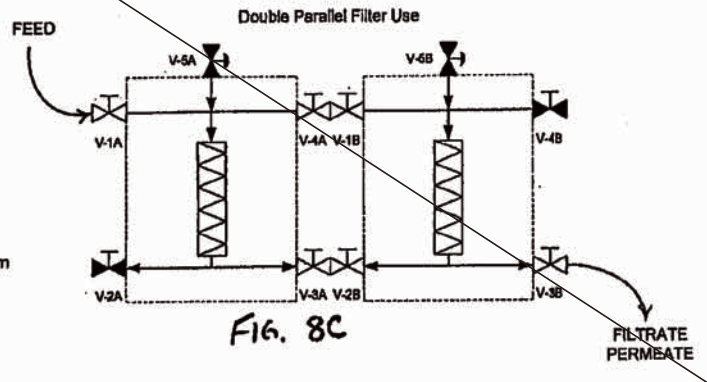

FIG. 8C

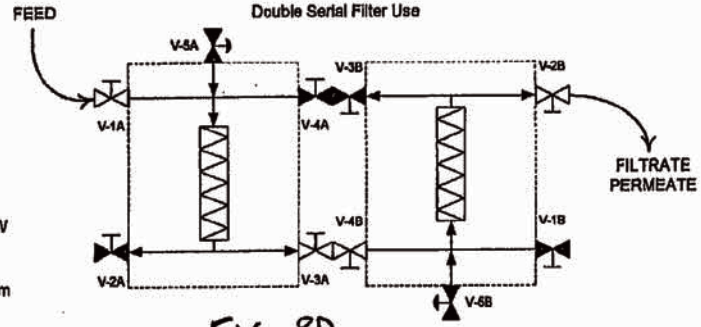

FIG. 8D

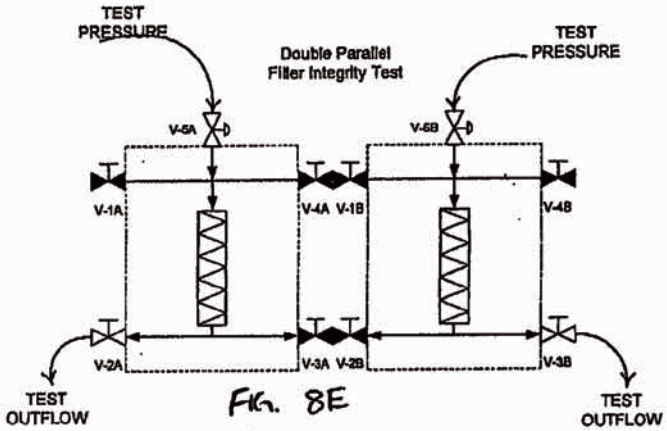

FIG. 8E

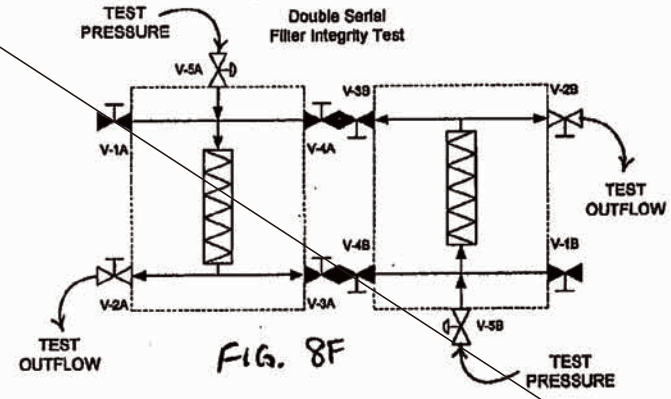

FIG. 8F

Fig. 9

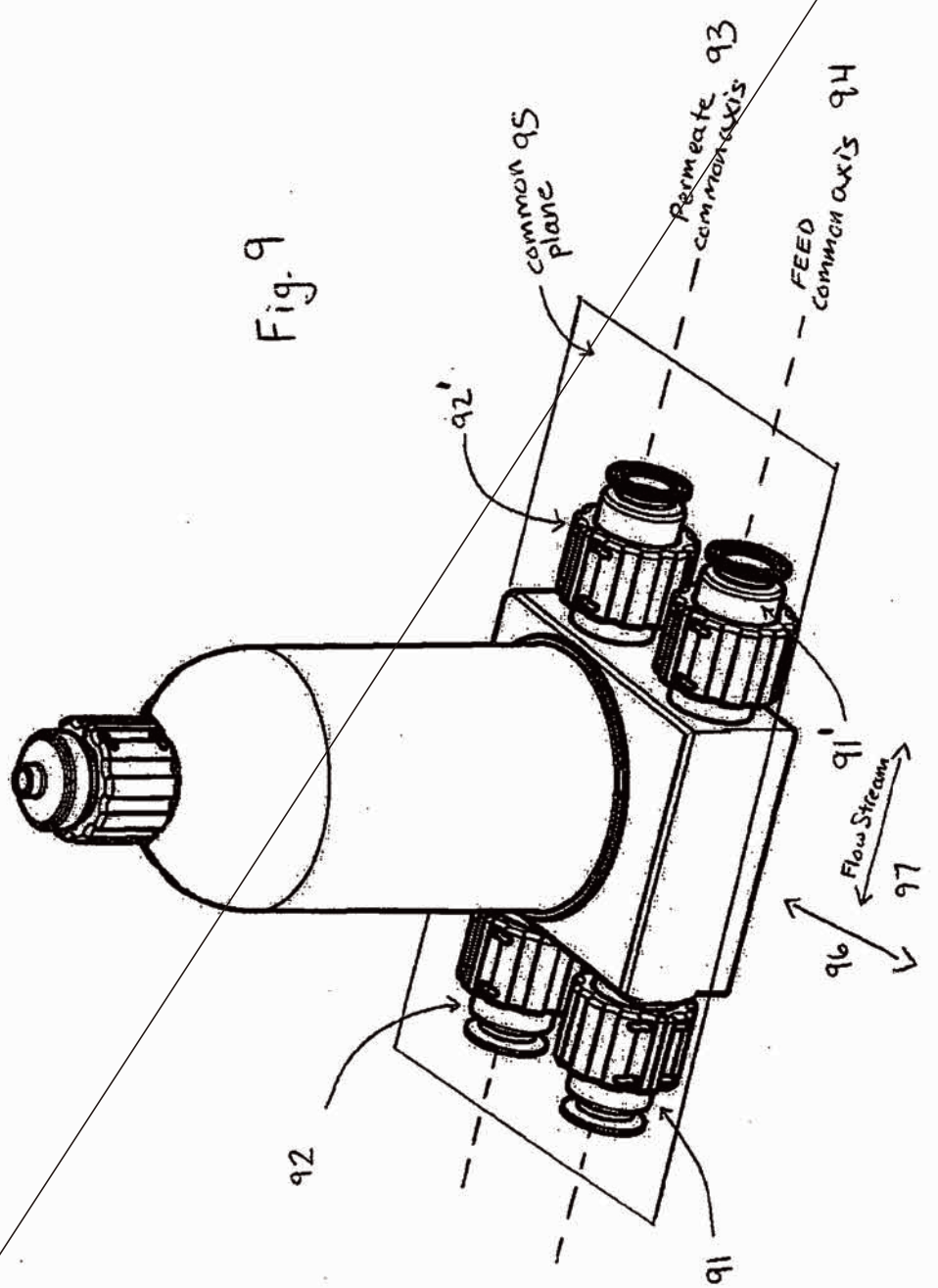
common 95 plane
Permeate 93 common axis
FEED common axis 94
92'
91'
Flow Streams 97
96
92
91

FIG. 10

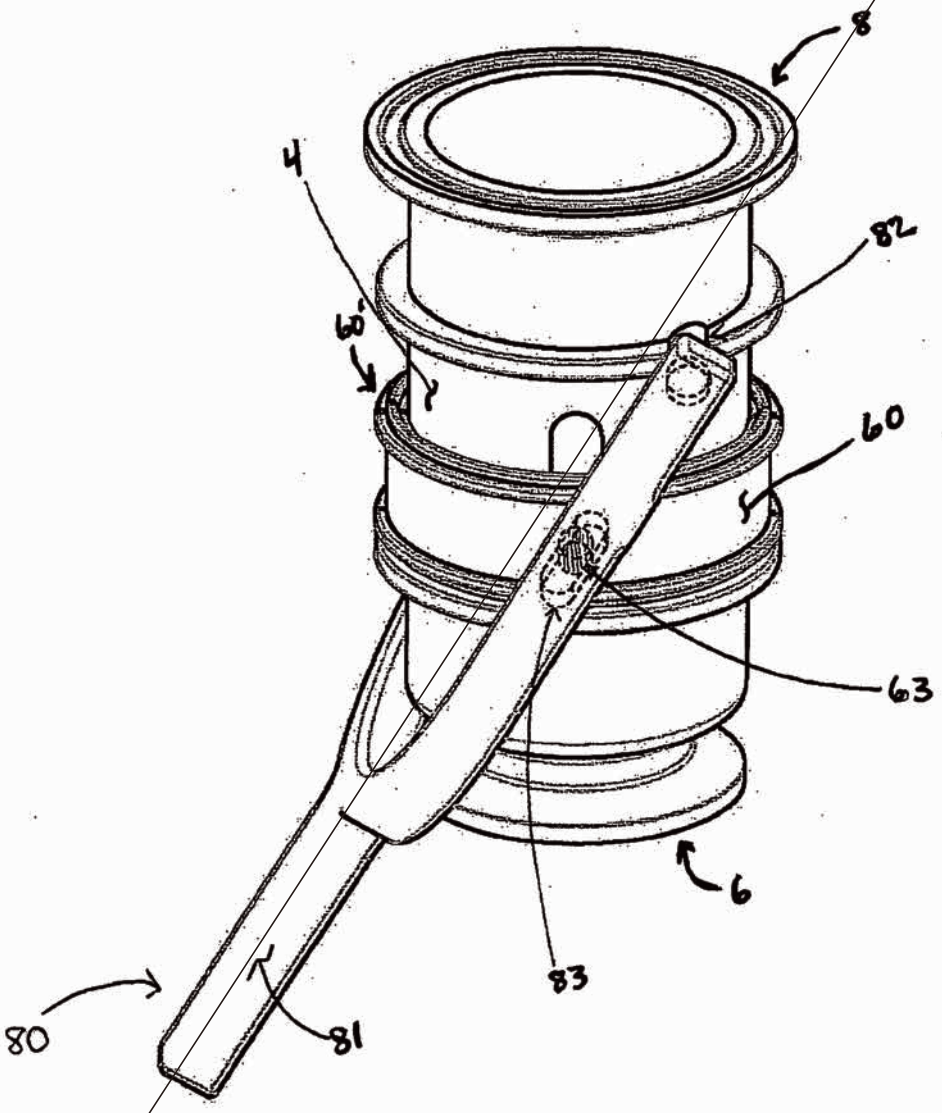

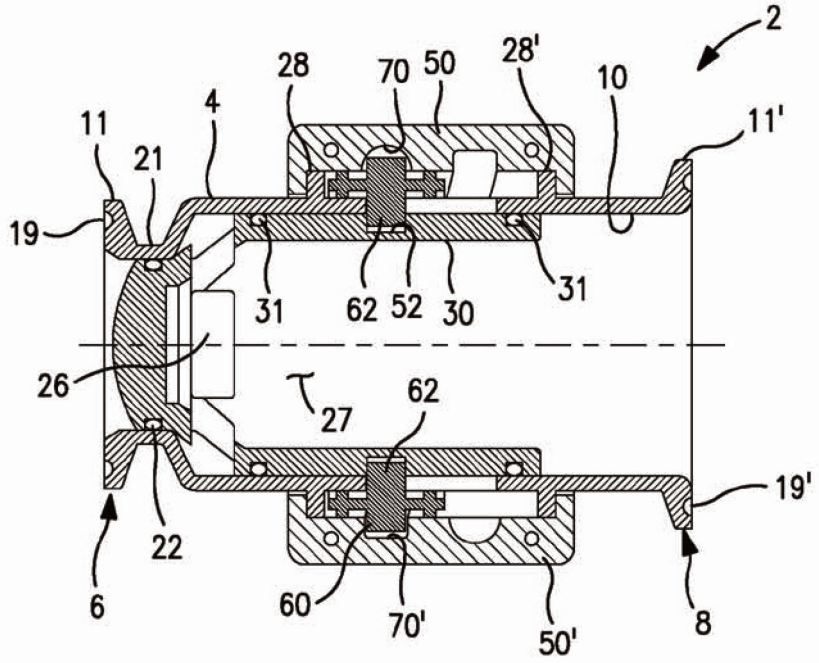
2
28
70
50
28'
10
11'
11
21
4
19
31
62
52
30
31
26
27
62
19'
22
6
60
70'
50'
8

FIG. 1

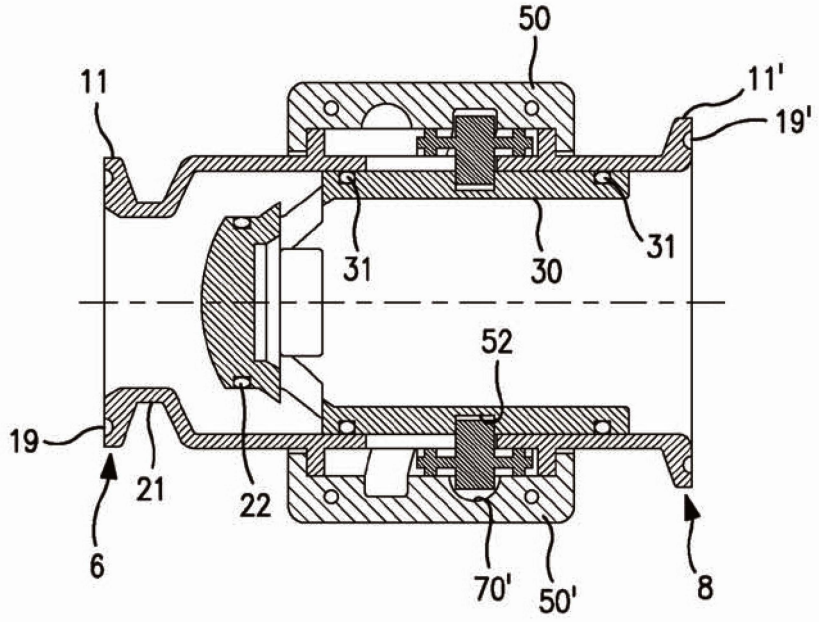
50
11
11'
19'
31
30
31
52
19
21
22
6
70'
50'
8

FIG. 2

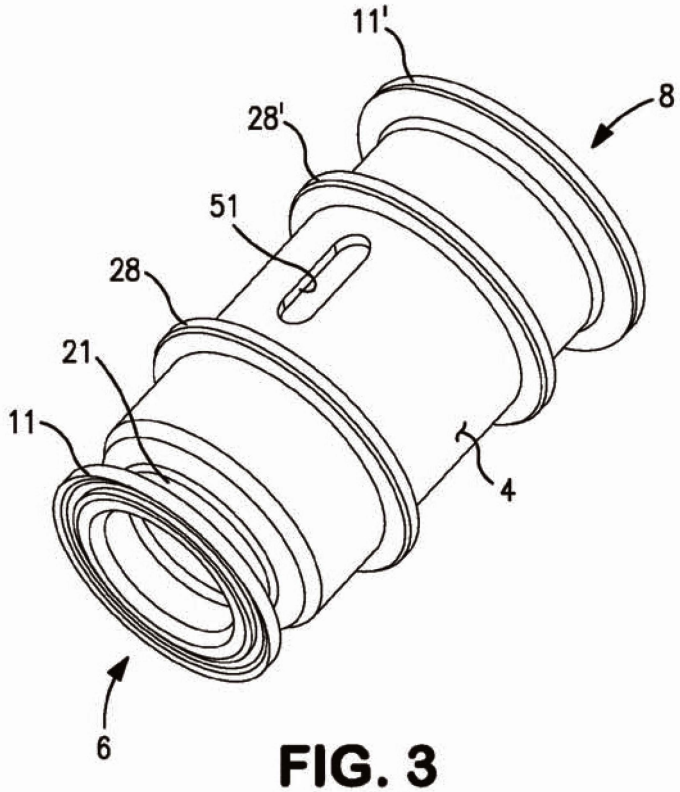

FIG. 3

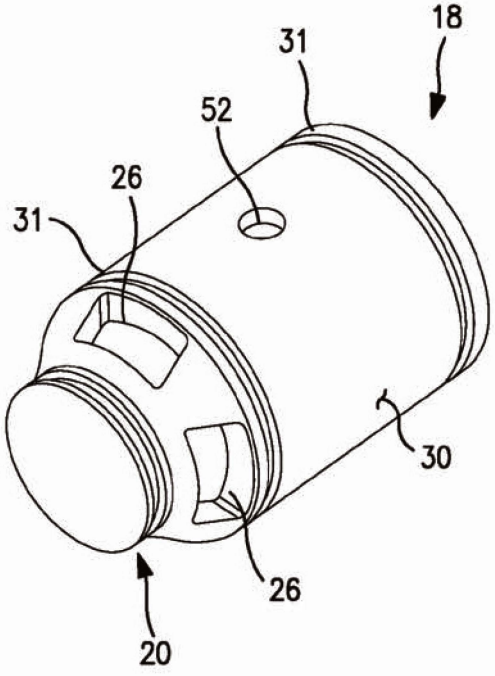

FIG. 4

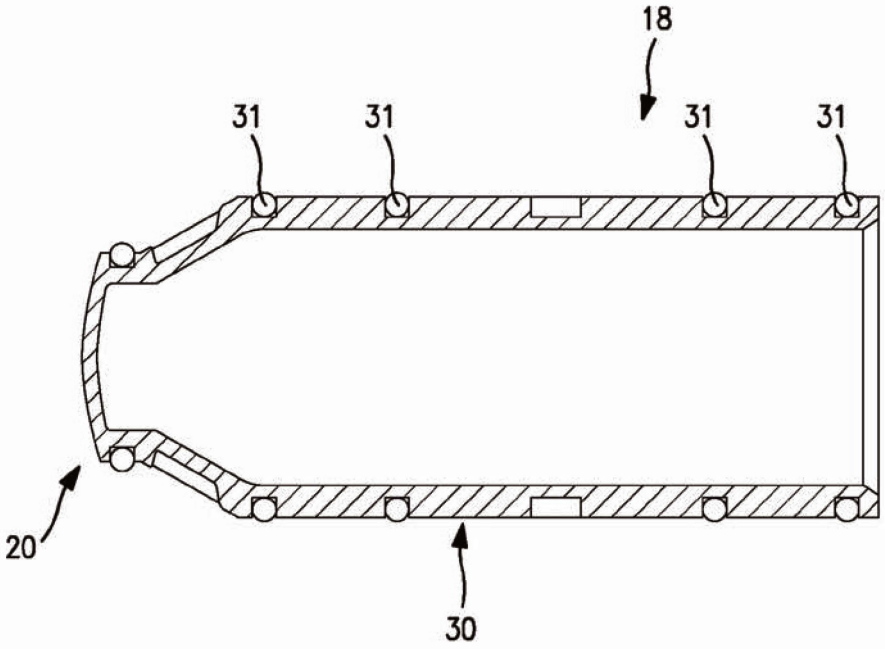

FIG. 4A

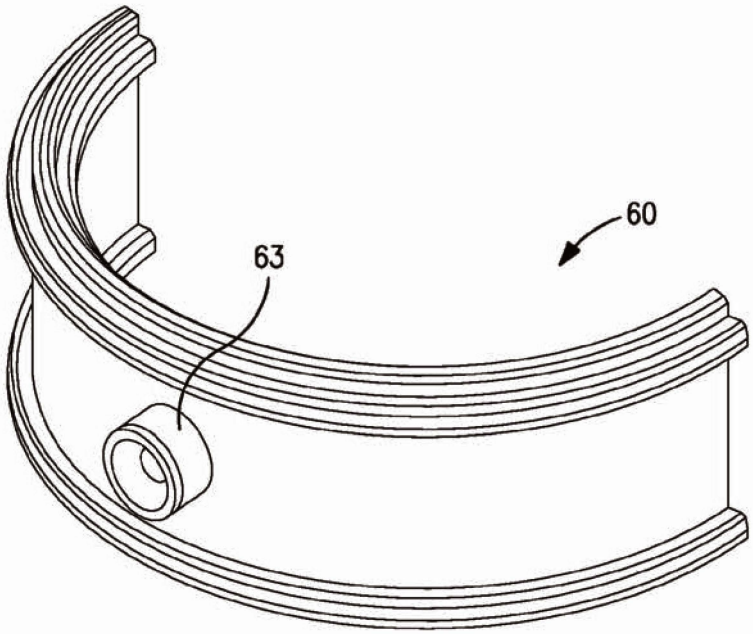

FIG. 5

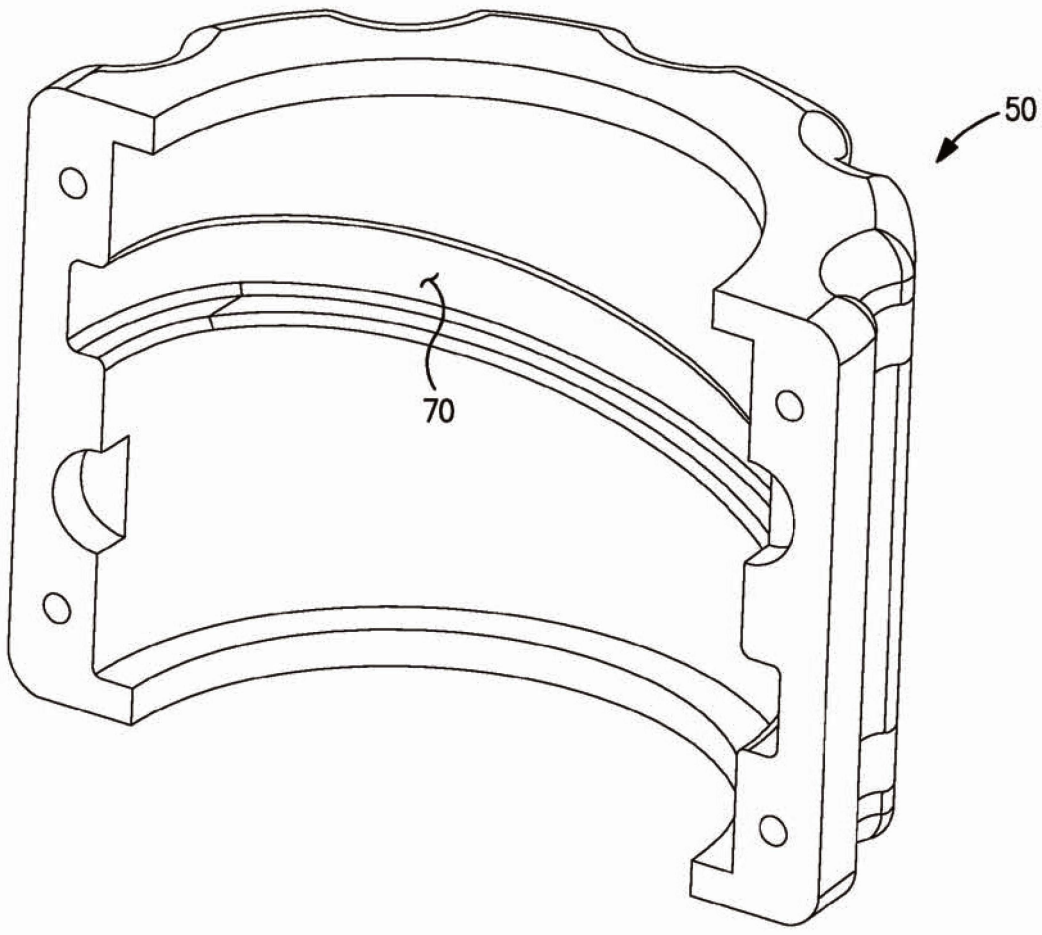

FIG. 6

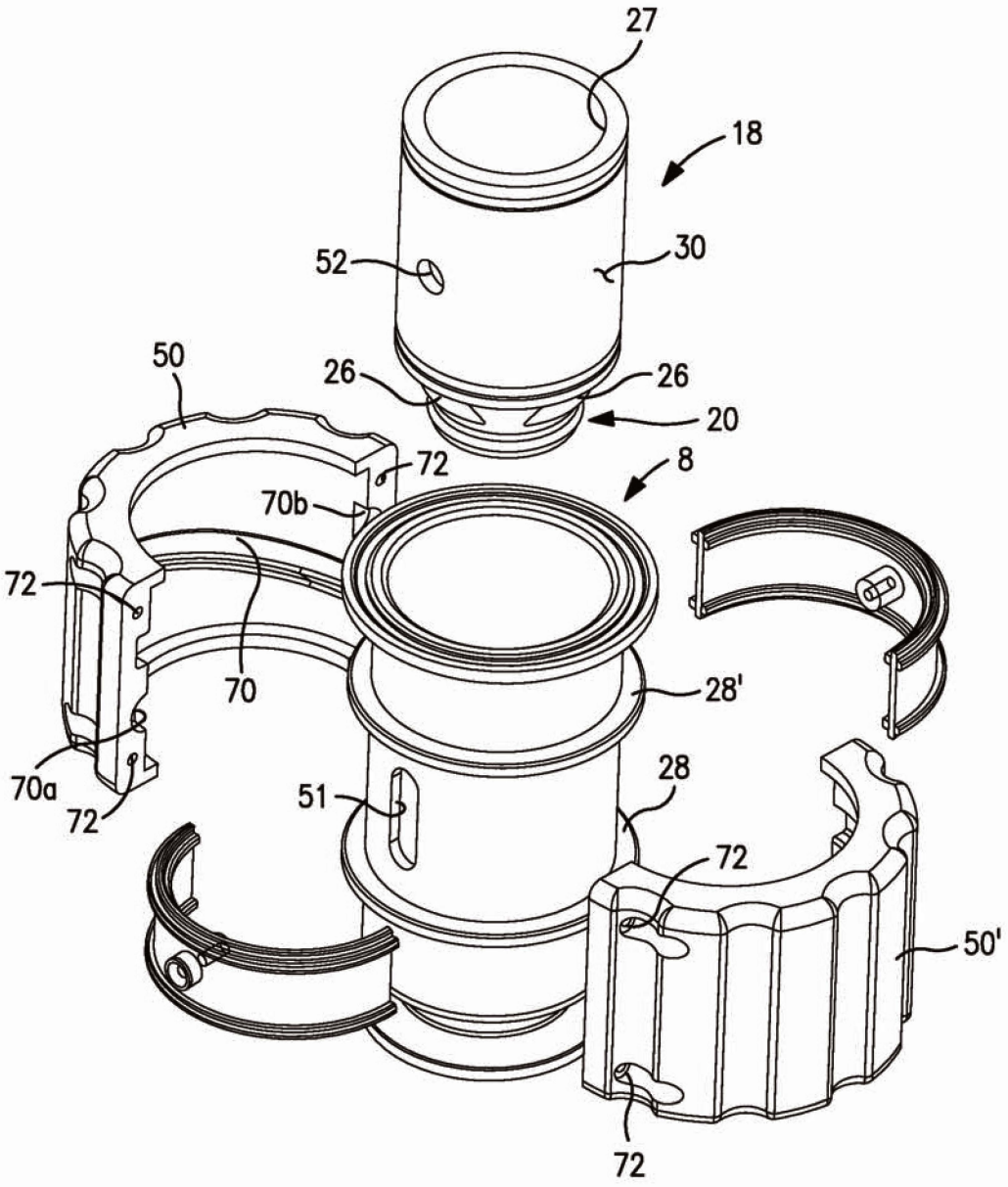

FIG. 7

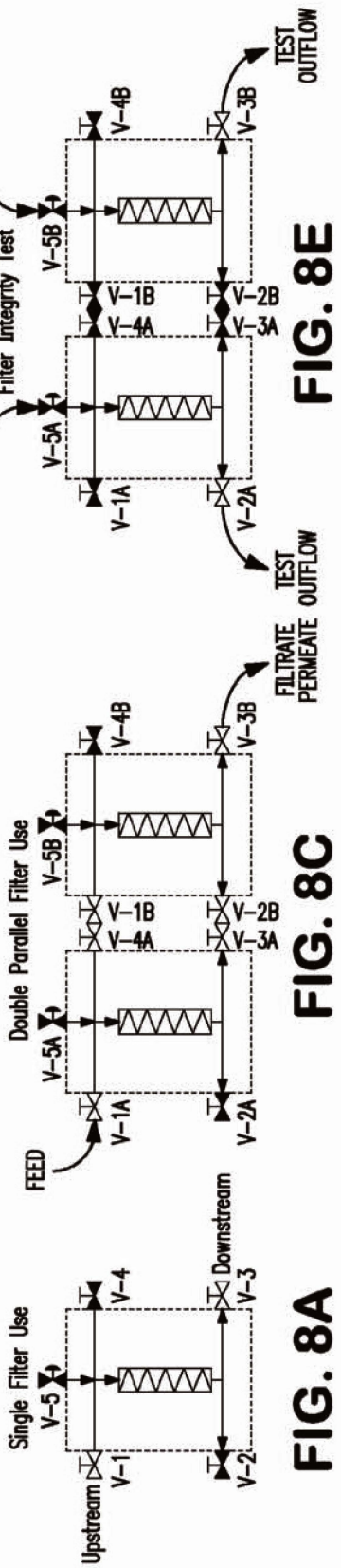

FIG. 8A

FIG. 8C

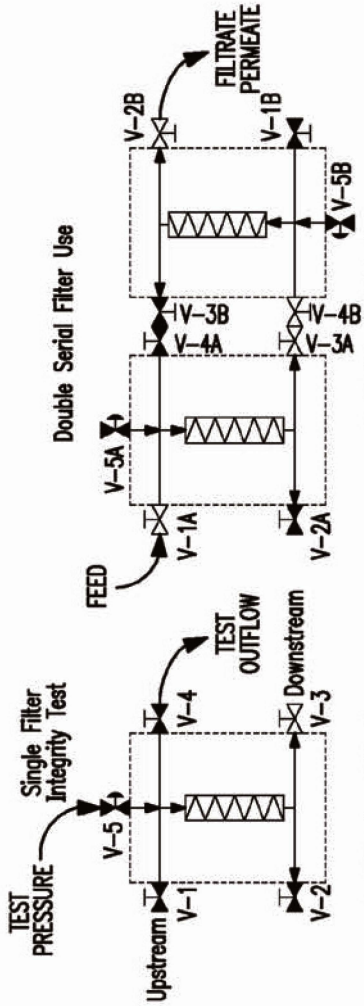

FIG. 8D

FIG. 8E

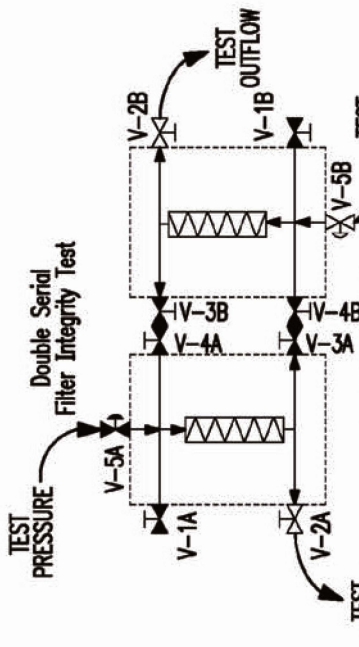

FIG. 8F

FIG. 8B

FIG. 9

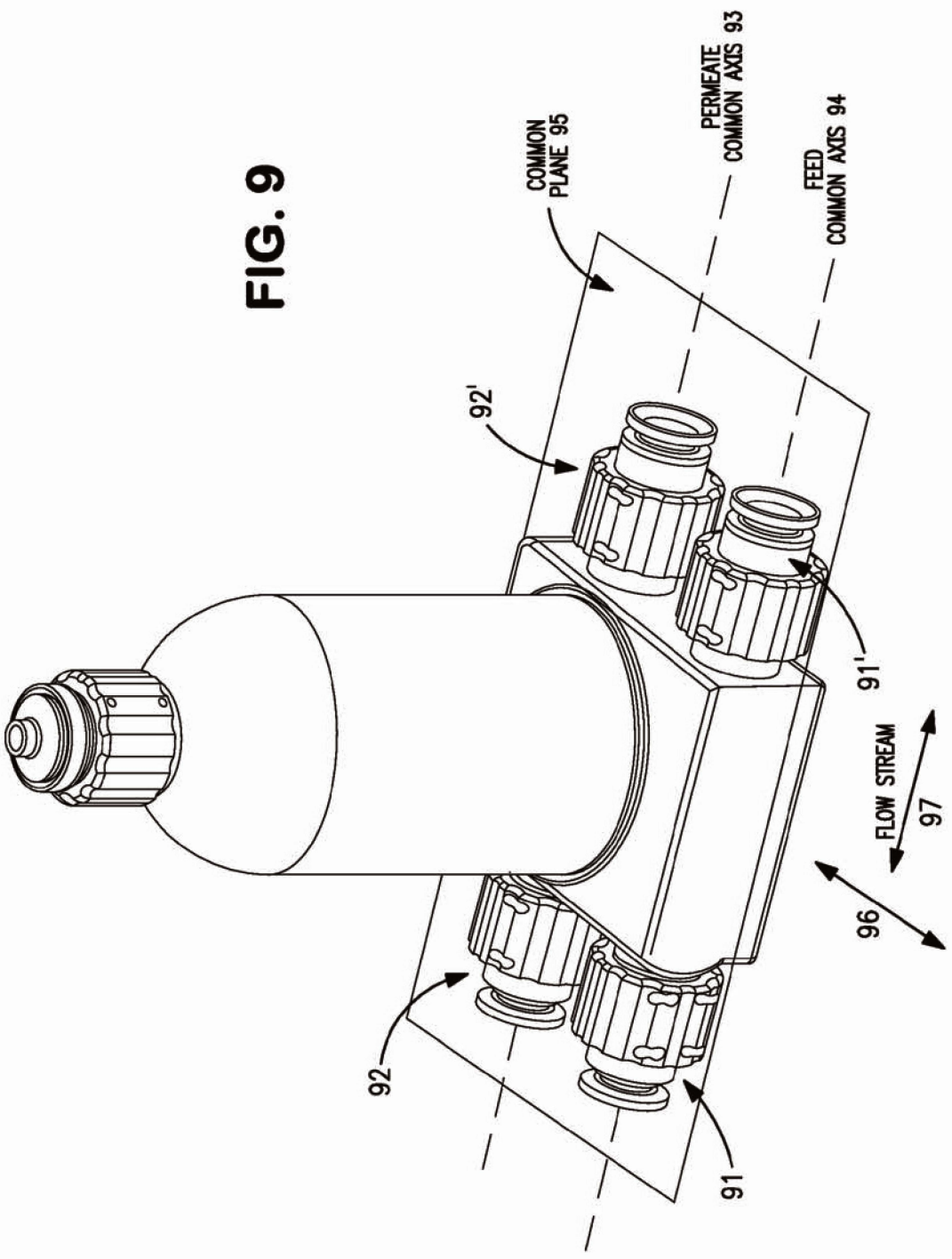
COMMON PLANE 95
PERMEATE COMMON AXIS 93
FEED COMMON AXIS 94
92'
91'
92
91
FLOW STREAM
97
96

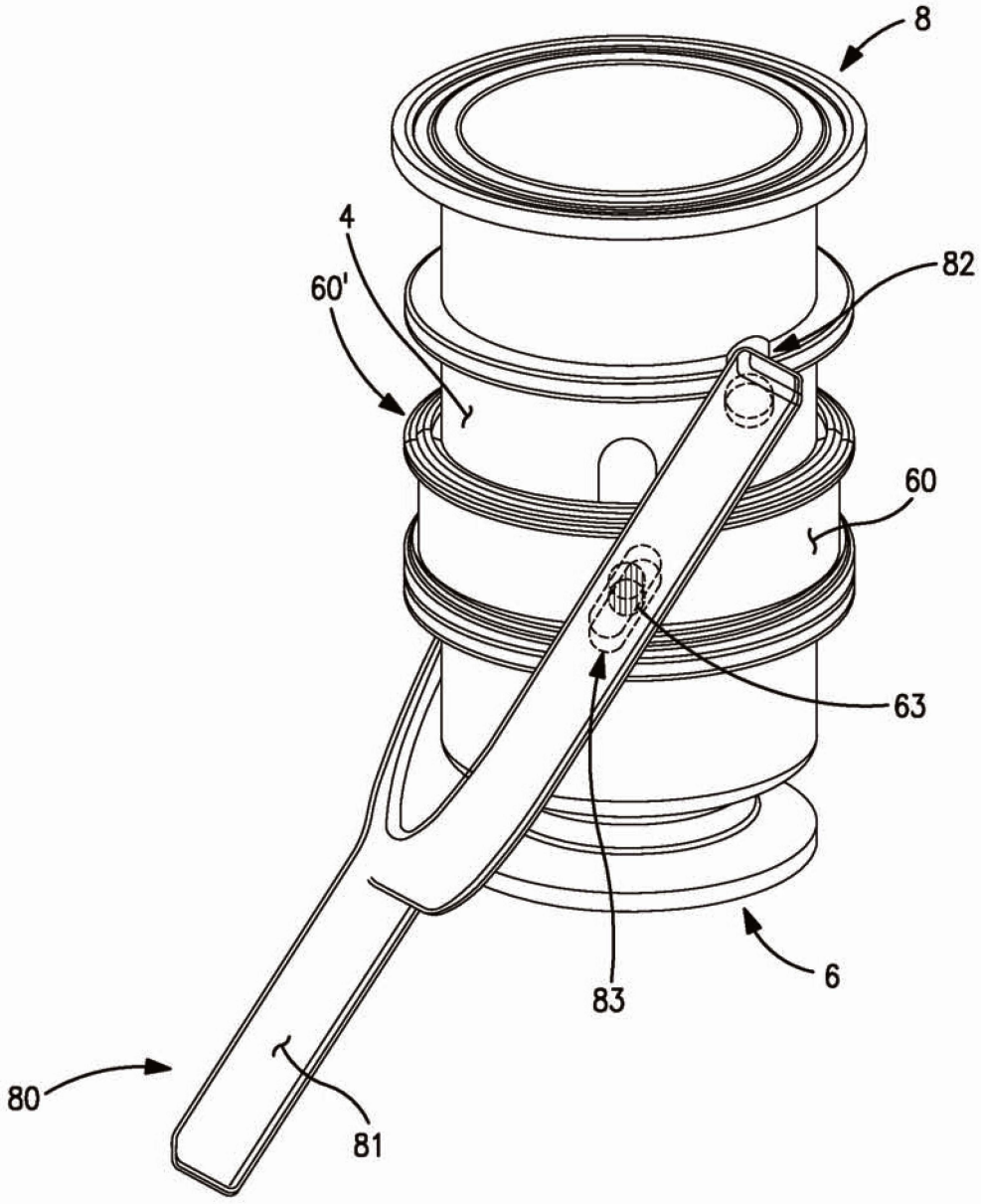

FIG. 10