(12) INTERNATIONAL APPLICATION PUBLISHED UNDER THE PATENT COOPERATION TREATY (PCT)

(19) World Intellectual Property Organization
International Bureau

(43) International Publication Date
10 June 2010 (10.06.2010)

PCT

(10) International Publication Number
WO 2010/064138 A1

(51) International Patent Classification:
G06F 3/01 (2006.01)

(21) International Application Number:
PCT/IB2009/007728

(22) International Filing Date:
1 December 2009 (01.12.2009)

(25) Filing Language: English

(26) Publication Language: English

(30) Priority Data:
61/118,733 1 December 2008 (01.12.2008) US

(71) Applicant *(for all designated States except US)*: **NATIONAL UNIVERSITY SINGAPORE** [SG/SG]; Industry Liaison Office, 21 Heng Mui Keng Terrace, Level 5, Singapore 119613 (SG).

(72) Inventors; and

(75) Inventors/Applicants *(for US only)*: **GE, Shuzhi** [SG/SG]; c/o National University Singapore, Faculty of Engineering, Department of Electrical And Computer Engineering, Block E4 #05-48, 4 Engineering Drive 3, Singapore, 117576 (SG). **HOU, Junsong** [SG/SG]; c/o National University Singapore, Faculty of Engineering, Department of Electrical And Computer Engineering, Block E4 #05-48, 4 Engineering Drive 3, Singapore, 117576 (SG). **WANG, Bin** [SG/SG]; c/o National University Singapore, Faculty of Engineering, Department of Electrical And Computer Engineering, Block E4 #05-48, 4 Engineering Drive 3, Singapore, 117576 (SG).

(81) Designated States *(unless otherwise indicated, for every kind of national protection available)*: AE, AG, AL, AM, AO, AT, AU, AZ, BA, BB, BG, BH, BR, BW, BY, BZ, CA, CH, CL, CN, CO, CR, CU, CZ, DE, DK, DM, DO, DZ, EC, EE, EG, ES, FI, GB, GD, GE, GH, GM, GT, HN, HR, HU, ID, IL, IN, IS, JP, KE, KG, KM, KN, KP, KR, KZ, LA, LC, LK, LR, LS, LT, LU, LY, MA, MD, ME, MG, MK, MN, MW, MX, MY, MZ, NA, NG, NI, NO, NZ, OM, PE, PG, PH, PL, PT, RO, RS, RU, SC, SD, SE, SG, SK, SL, SM, ST, SV, SY, TJ, TM, TN, TR, TT, TZ, UA, UG, US, UZ, VC, VN, ZA, ZM, ZW.

(84) Designated States *(unless otherwise indicated, for every kind of regional protection available)*: ARIPO (BW, GH, GM, KE, LS, MW, MZ, NA, SD, SL, SZ, TZ, UG, ZM, ZW), Eurasian (AM, AZ, BY, KG, KZ, MD, RU, TJ, TM), European (AT, BE, BG, CH, CY, CZ, DE, DK, EE, ES, FI, FR, GB, GR, HR, HU, IE, IS, IT, LT, LU, LV, MC, MK, MT, NL, NO, PL, PT, RO, SE, SI, SK, SM,

[Continued on next page]

(54) Title: PORTABLE ENGINE FOR ENTERTAINMENT, EDUCATION, OR COMMUNICATION

(57) Abstract: To simplify human-machine interaction, a portable interaction module includes multiple channels through which input is received. Different types of input mechanisms or sensors allow use of multiple techniques for capturing input, such as motion sensing, audio sensing, image tracking, image sensing, or physiological sensing. A fusion module included in the portable input device receives data from the input mechanisms or sensors and generates an input description identifying which input mechanisms or sensors receive data. The input description is communicated to a target device, which determines an output corresponding to the input description. Using multiple input capture techniques simplifies interaction with the target device by providing a variety of methods for obtaining input.

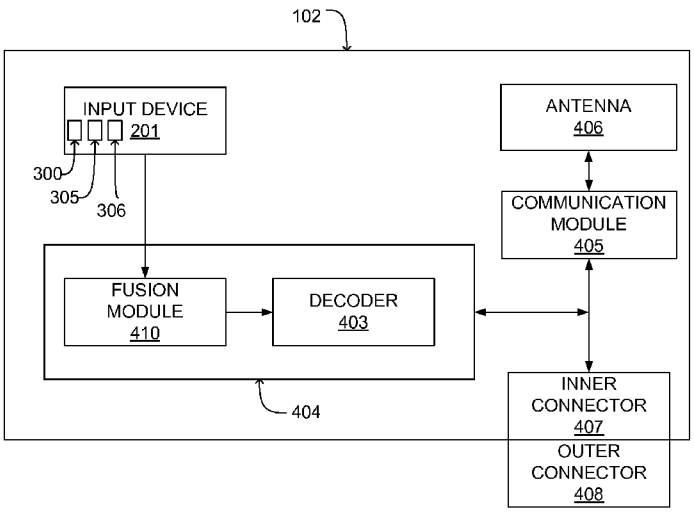

FIG. 4

WO 2010/064138 A1

TR), OAPI (BF, BJ, CF, CG, CI, CM, GA, GN, GQ, GW, ML, MR, NE, SN, TD, TG).

Published:

— *with international search report (Art. 21(3))*

— *before the expiration of the time limit for amending the claims and to be republished in the event of receipt of amendments (Rule 48.2(h))*