(12) INTERNATIONAL APPLICATION PUBLISHED UNDER THE PATENT COOPERATION TREATY (PCT)

(19) World Intellectual Property Organization
International Bureau

(43) International Publication Date
1 May 2003 (01.05.2003)

PCT

(10) International Publication Number
WO 03/036308 A1

(51) International Patent Classification[7]: G01R 1/073

(21) International Application Number: PCT/US02/32360

(22) International Filing Date: 9 October 2002 (09.10.2002)

(25) Filing Language: English

(26) Publication Language: English

(30) Priority Data:
10/035,508 22 October 2001 (22.10.2001) US

(71) Applicant *(for all designated States except US)*: **ELECTROGLAS, INC.** [US/US]; 6024 Silver Creek Valley Road, San Jose, CA 95138 (US).

(72) Inventors; and

(75) Inventors/Applicants *(for US only)*: **BOYLE, Timothy, J.** [US/US]; 21030 Hazelbrook Drive, Cupertino, CA 95014 (US). **RICHTER, Wayne, E.** [US/US]; 4297 Houndsbrook Way, San Jose, CA 95111 (US). **JOHNSON, Ladd, T.** [US/US]; 560 Pinecone Drive, Scotts Valley, CA 95066 (US). **TOM, Lawrence, A.** [US/US]; 454-H Costa Mesa Terrace, Sunnyvale, CA 94085 (US).

(74) Agents: **SCHELLER, James, C., Jr.** et al.; Blakely, Sokoloff, Taylor & Zafman LLP, 7th floor, 12400 Wilshire Boulevard, Los Angeles, CA 90025 (US).

(81) Designated States *(national)*: AE, AG, AL, AM, AT, AU, AZ, BA, BB, BG, BR, BY, BZ, CA, CH, CN, CO, CR, CU, CZ, DE, DK, DM, DZ, EC, EE, ES, FI, GB, GD, GE, GH, GM, HR, HU, ID, IL, IN, IS, JP, KE, KG, KP, KR, KZ, LC, LK, LR, LS, LT, LU, LV, MA, MD, MG, MK, MN, MW, MX, MZ, NO, NZ, OM, PH, PL, PT, RO, RU, SD, SE, SG, SI, SK, SL, TJ, TM, TN, TR, TT, TZ, UA, UG, US, UZ, VN, YU, ZA, ZM, ZW.

(84) Designated States *(regional)*: ARIPO patent (GH, GM, KE, LS, MW, MZ, SD, SL, SZ, TZ, UG, ZM, ZW),

[Continued on next page]

(54) Title: APPARATUS AND METHOD FOR HANDLING AND TESTING OF WAFERS

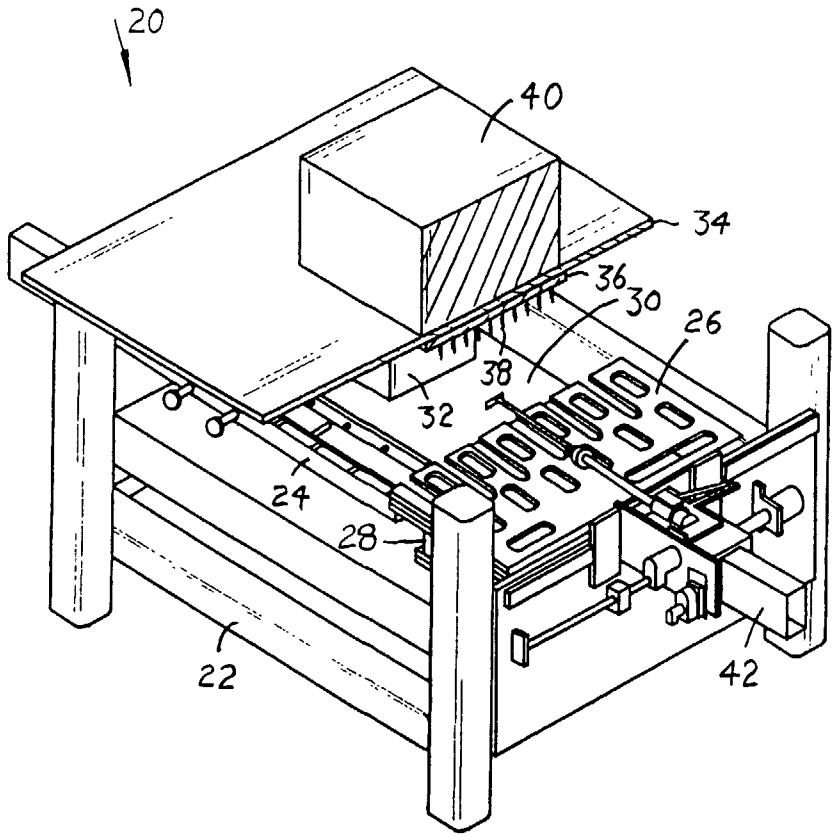

(57) Abstract: The invention provides a method of testing a circuit on a substrate. Generally speaking, a substrate is located in a transfer chuck (26), a surface of a test chuck (32) is moved into contact with a substrate, the substrate is secured to the test chuck (32), the test chuck (32) is moved relative to the transfer chuck (26) so that the substrate moves off the transfer chuck (26), terminals on the substrate are moved into contact with contacts to electrically connect the circuit through the terminals and the contacts to an electric tester, signals are relayed through the terminal and the contacts between the electric tester and the circuit, the terminals are disengaged from the contacts, and the substrate is removed from the test chuck (32).

WO 03/036308 A1

Eurasian patent (AM, AZ, BY, KG, KZ, MD, RU, TJ, TM), European patent (AT, BE, BG, CH, CY, CZ, DE, DK, EE, ES, FI, FR, GB, GR, IE, IT, LU, MC, NL, PT, SE, SK, TR), OAPI patent (BF, BJ, CF, CG, CI, CM, GA, GN, GQ, GW, ML, MR, NE, SN, TD, TG).

Published:
— *with international search report*

For two-letter codes and other abbreviations, refer to the "Guidance Notes on Codes and Abbreviations" appearing at the beginning of each regular issue of the PCT Gazette.