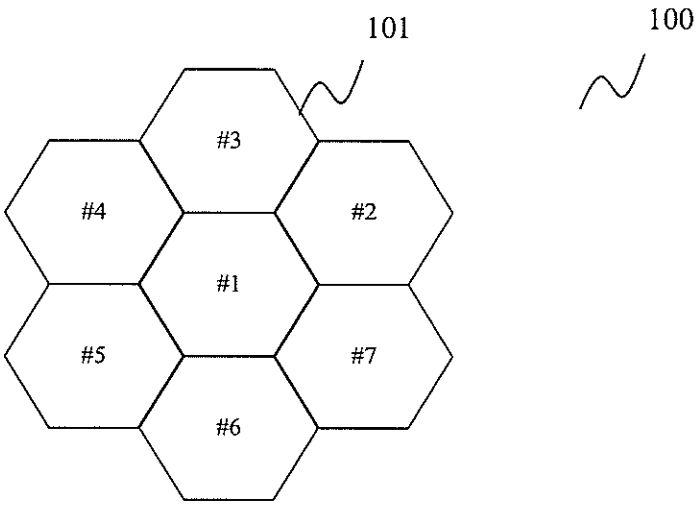

Figure 1

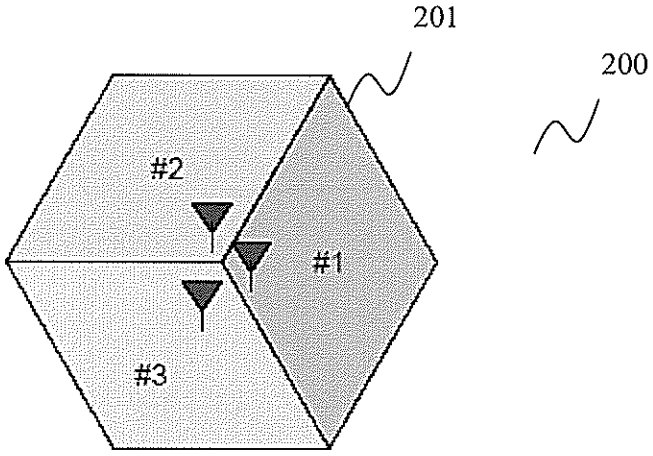

Figure 2

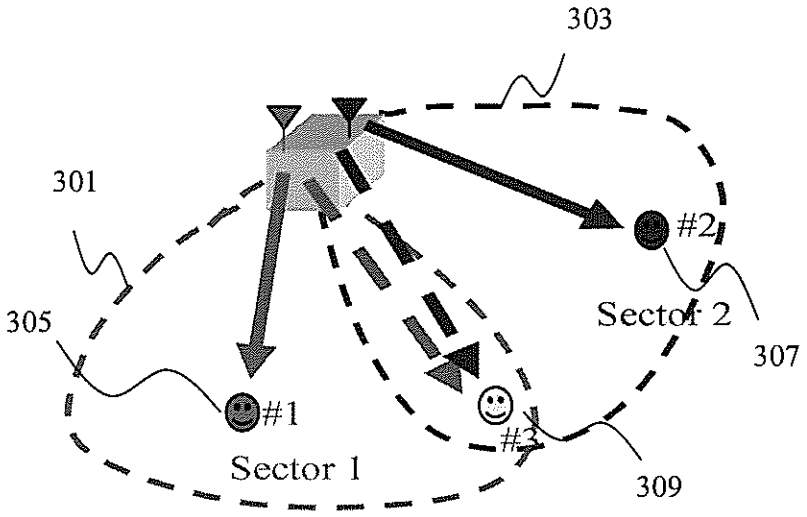

Figure 3

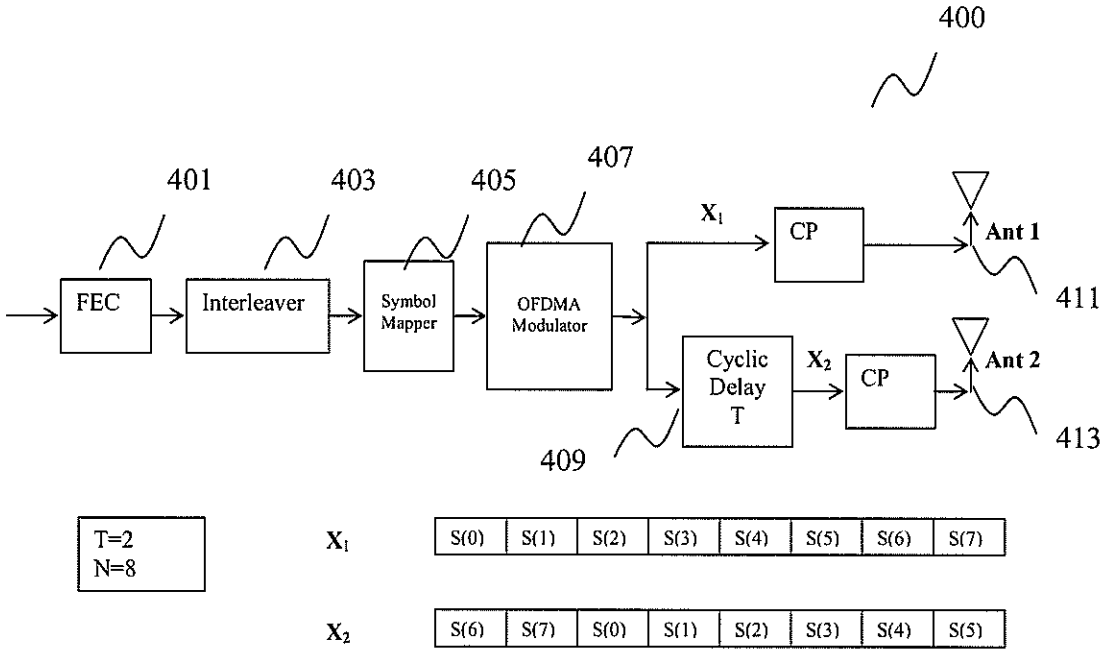

Figure 4

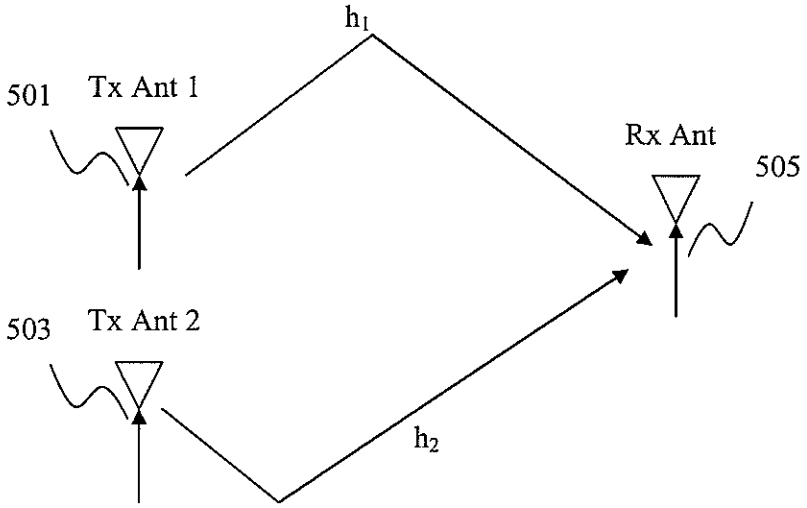

Figure 5

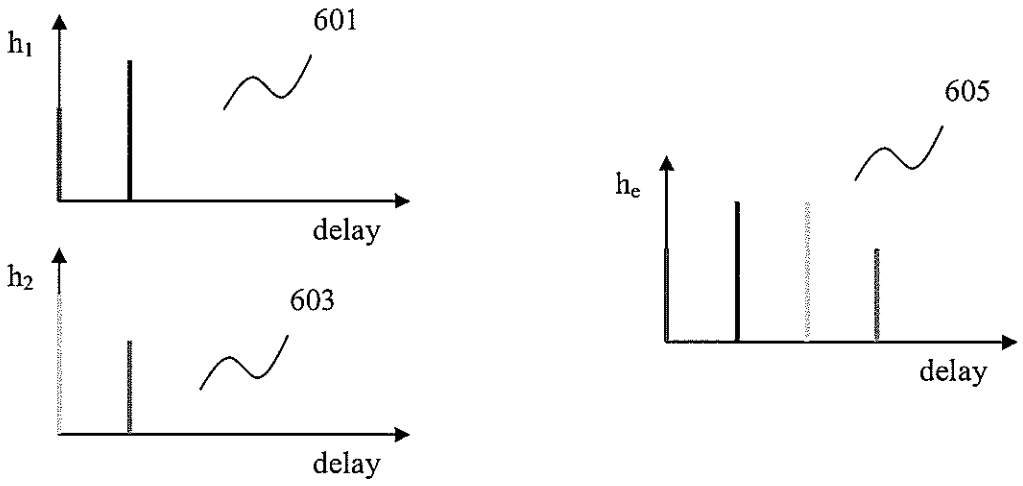

Figure 6

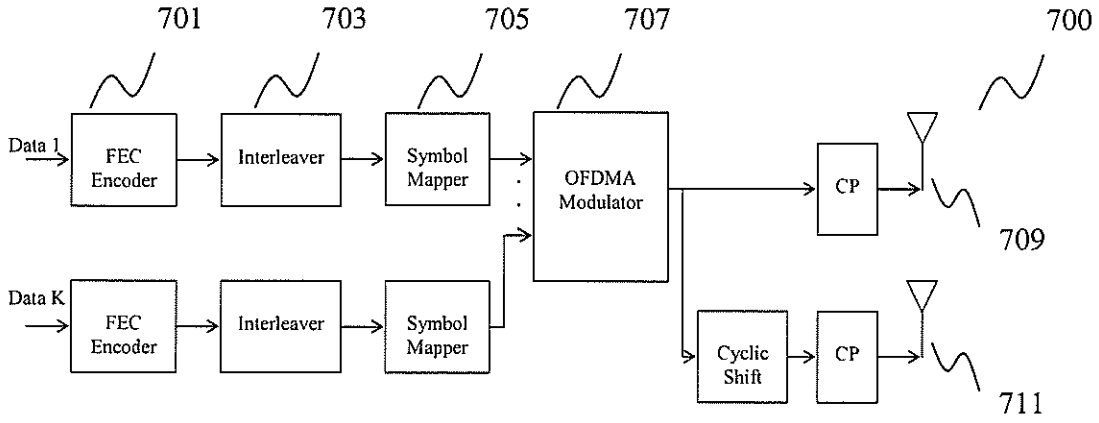

Figure 7

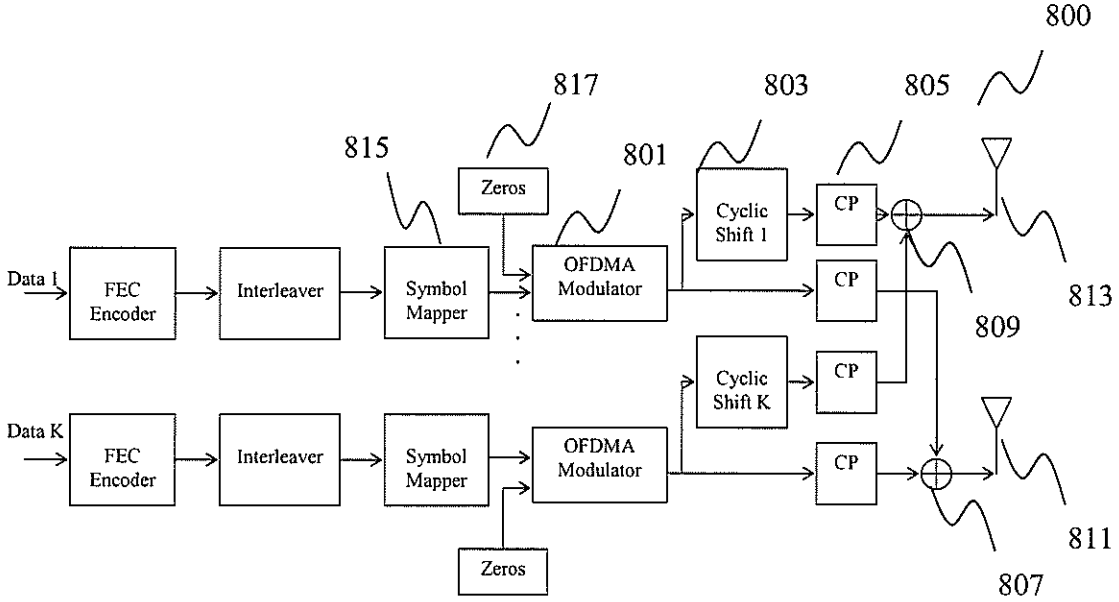

Figure 8

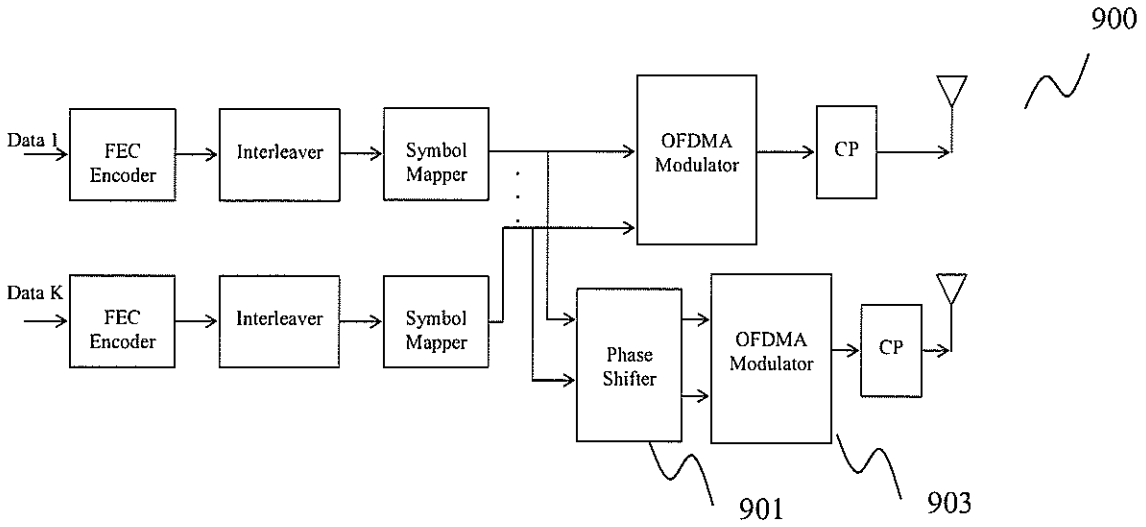

Figure 9

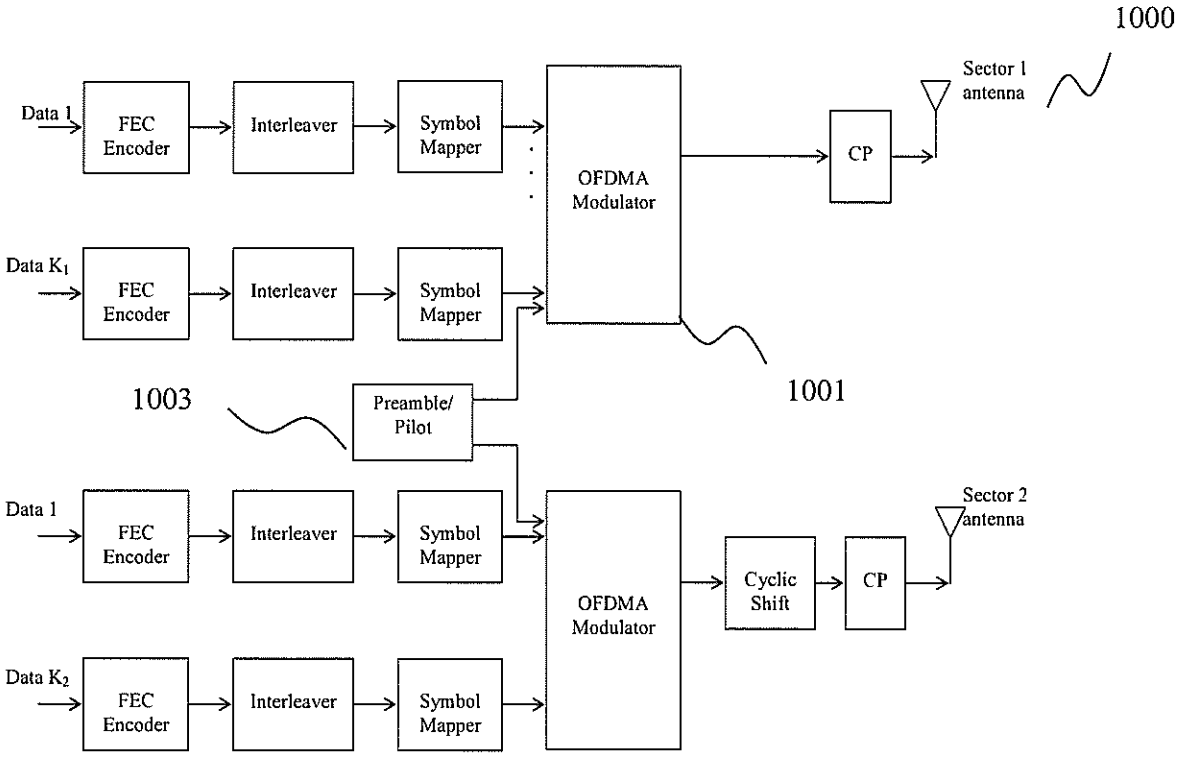

Figure 10

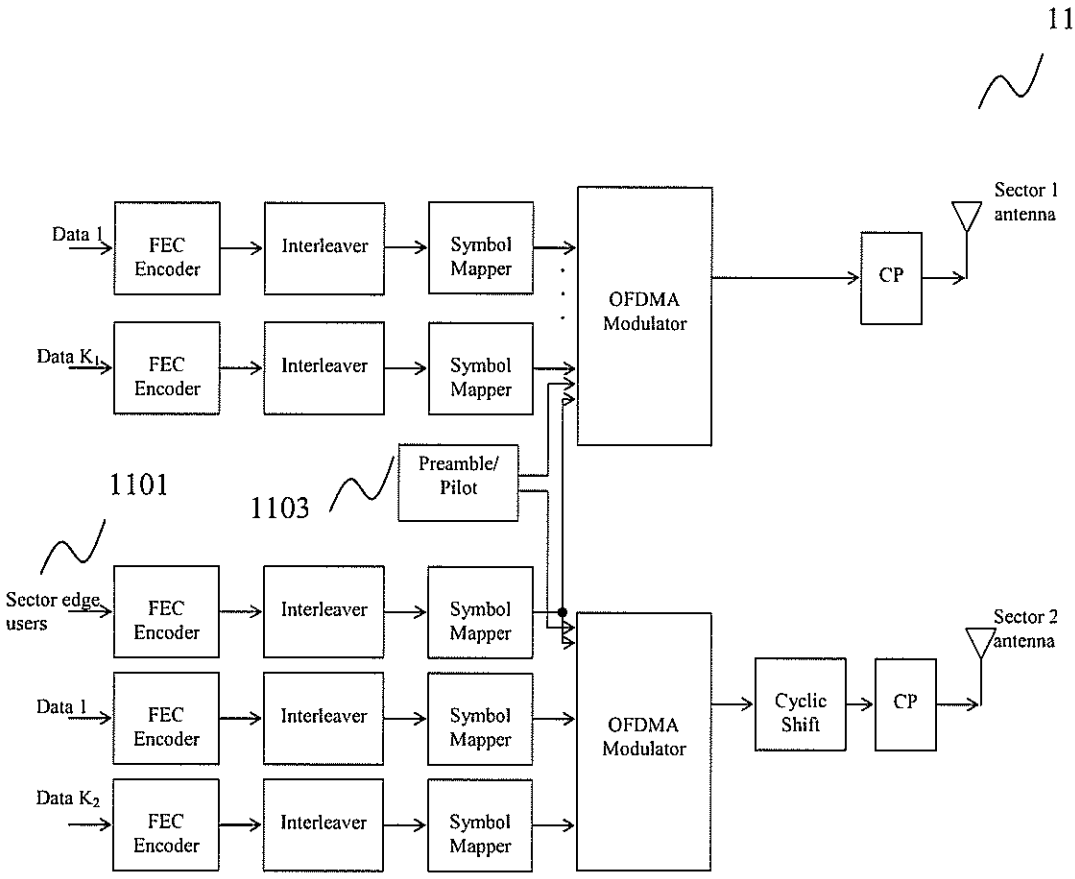
1100
Data 1
FEC Encoder
Interleaver
Symbol Mapper
Data K_1
FEC Encoder
Interleaver
Symbol Mapper
OFDMA Modulator
CP
Sector 1 antenna
1101
1103
Preamble/ Pilot
Sector edge users
FEC Encoder
Interleaver
Symbol Mapper
Data 1
FEC Encoder
Interleaver
Symbol Mapper
Data K_2
FEC Encoder
Interleaver
Symbol Mapper
OFDMA Modulator
Cyclic Shift
CP
Sector 2 antenna

Figure 11

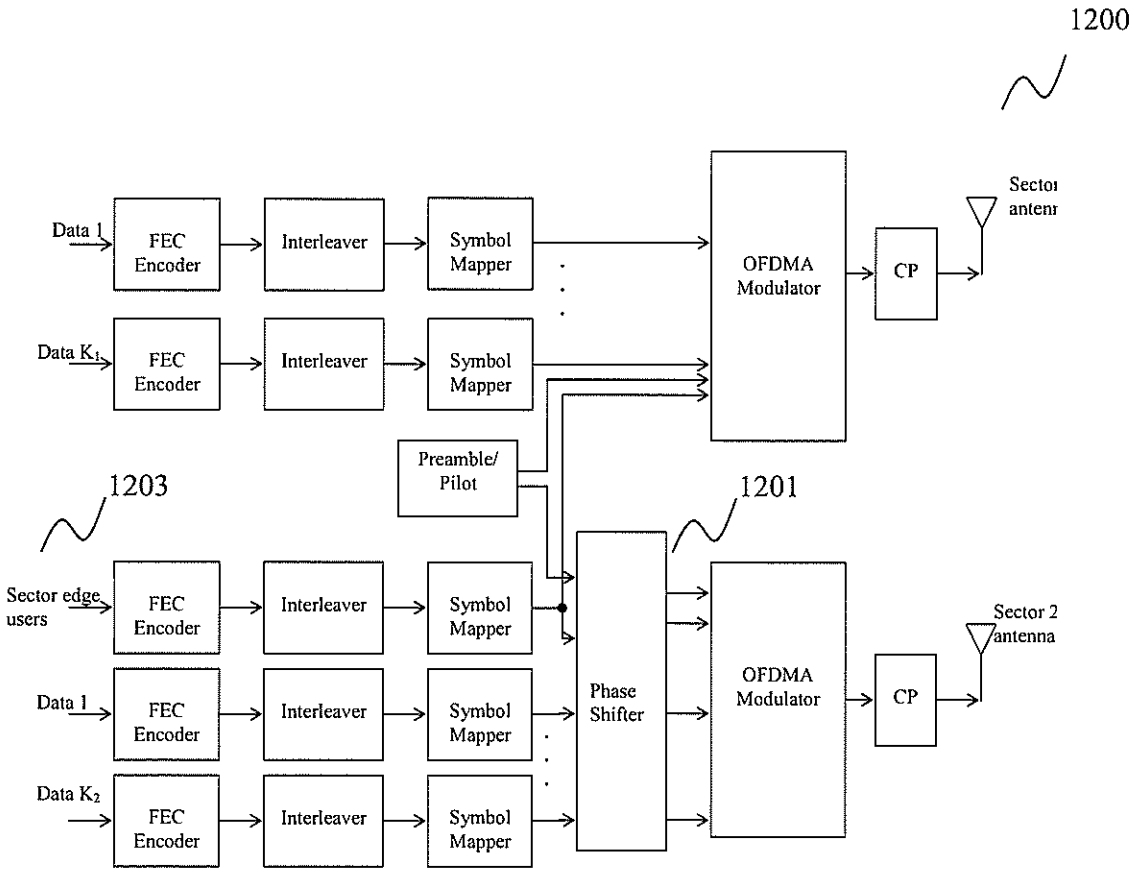
1200
Data 1
FEC Encoder
Interleaver
Symbol Mapper
Data K1
FEC Encoder
Interleaver
Symbol Mapper
OFDMA Modulator
CP
Sector antenn
Preamble/ Pilot
1203
1201
Sector edge users
FEC Encoder
Interleaver
Symbol Mapper
Data 1
FEC Encoder
Interleaver
Symbol Mapper
Data K2
FEC Encoder
Interleaver
Symbol Mapper
Phase Shifter
OFDMA Modulator
CP
Sector 2 antenna

Figure 12

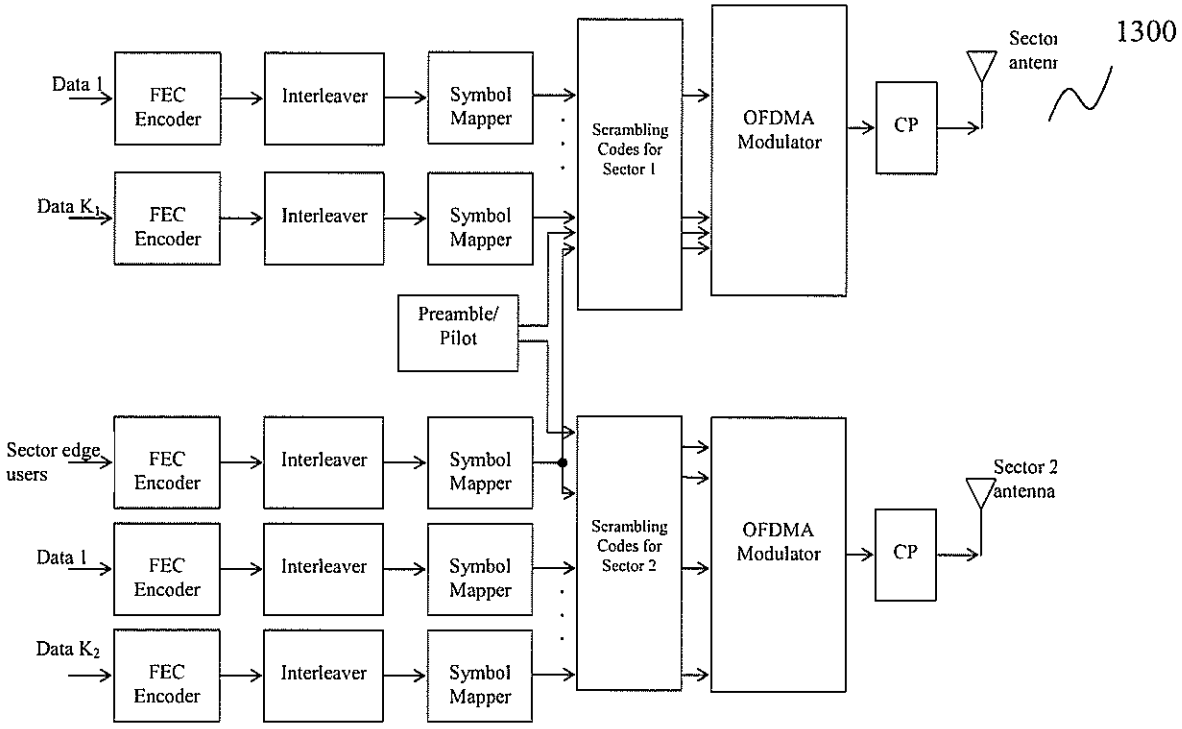

Figure 13

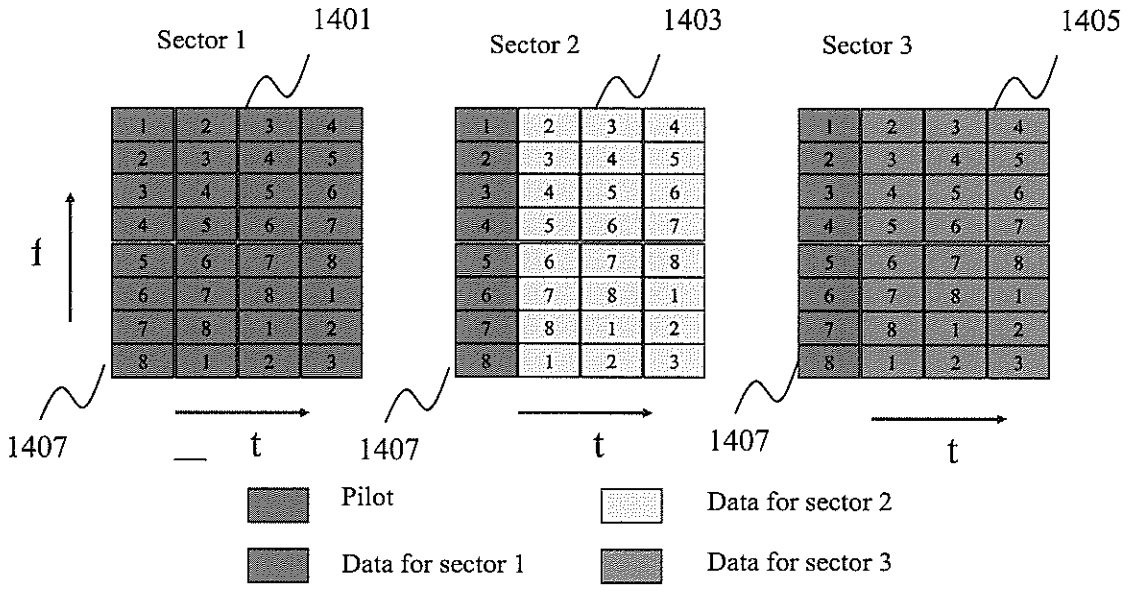

Figure 14

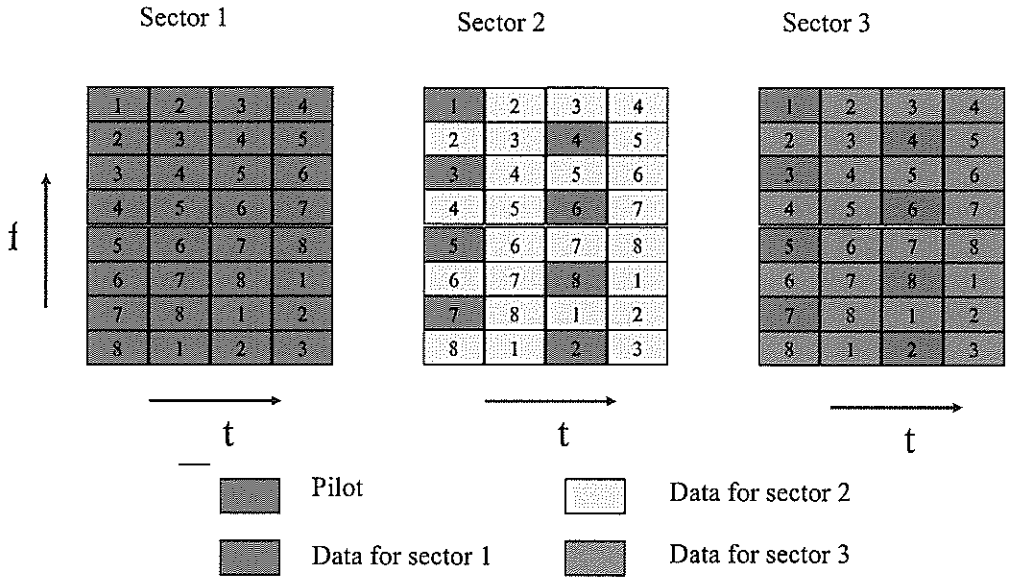

Figure 15

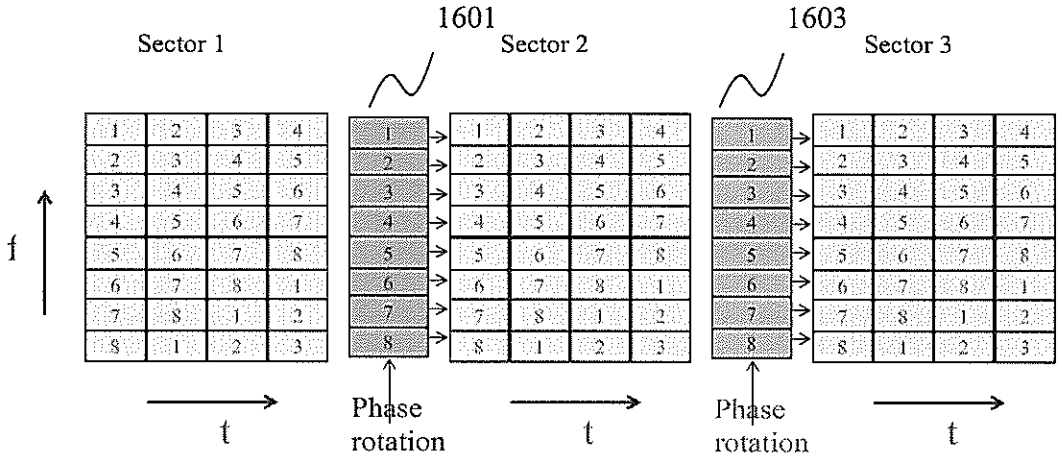

Figure 16

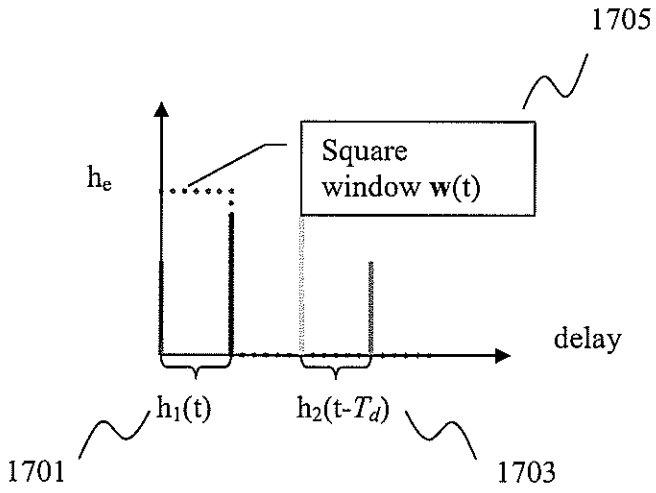

Figure 17