(12) INTERNATIONAL APPLICATION PUBLISHED UNDER THE PATENT COOPERATION TREATY (PCT)

(19) World Intellectual Property Organization
International Bureau

(43) International Publication Date
20 June 2013 (20.06.2013)

WIPO | PCT

(10) International Publication Number
WO 2013/088165 A1

(51) International Patent Classification:
B60N 2/48 (2006.01) *B60N 2/44* (2006.01)

(21) International Application Number:
PCT/GB2012/053141

(22) International Filing Date:
14 December 2012 (14.12.2012)

(25) Filing Language: English

(26) Publication Language: English

(30) Priority Data:
1121706.4 16 December 2011 (16.12.2011) GB

(72) Inventor; and
(71) Applicant : **LAMBERT, Trevor Edouard** [GB/GB]; 38b Archer House, Vicarage Crescent, London, Greater London SW11 3LF (GB).

(74) Agent: **BROOKES BATCHELLOR LLP**; 46 Chancery Lane, London, Greater London WC2A 1JE (GB).

(81) Designated States *(unless otherwise indicated, for every kind of national protection available)*: AE, AG, AL, AM, AO, AT, AU, AZ, BA, BB, BG, BH, BN, BR, BW, BY, BZ, CA, CH, CL, CN, CO, CR, CU, CZ, DE, DK, DM, DO, DZ, EC, EE, EG, ES, FI, GB, GD, GE, GH, GM, GT, HN, HR, HU, ID, IL, IN, IS, JP, KE, KG, KM, KN, KP, KR, KZ, LA, LC, LK, LR, LS, LT, LU, LY, MA, MD, ME, MG, MK, MN, MW, MX, MY, MZ, NA, NG, NI, NO, NZ, OM, PA, PE, PG, PH, PL, PT, QA, RO, RS, RU, RW, SC, SD, SE, SG, SK, SL, SM, ST, SV, SY, TH, TJ, TM, TN, TR, TT, TZ, UA, UG, US, UZ, VC, VN, ZA, ZM, ZW.

(84) Designated States *(unless otherwise indicated, for every kind of regional protection available)*: ARIPO (BW, GH, GM, KE, LR, LS, MW, MZ, NA, RW, SD, SL, SZ, TZ, UG, ZM, ZW), Eurasian (AM, AZ, BY, KG, KZ, RU, TJ, TM), European (AL, AT, BE, BG, CH, CY, CZ, DE, DK, EE, ES, FI, FR, GB, GR, HR, HU, IE, IS, IT, LT, LU, LV, MC, MK, MT, NL, NO, PL, PT, RO, RS, SE, SI, SK, SM, TR), OAPI (BF, BJ, CF, CG, CI, CM, GA, GN, GQ, GW, ML, MR, NE, SN, TD, TG).

Published:

— *with international search report (Art. 21(3))*

— *before the expiration of the time limit for amending the claims and to be republished in the event of receipt of amendments (Rule 48.2(h))*

WO 2013/088165 A1

(54) Title: VEHICLE SEAT

Fig 1

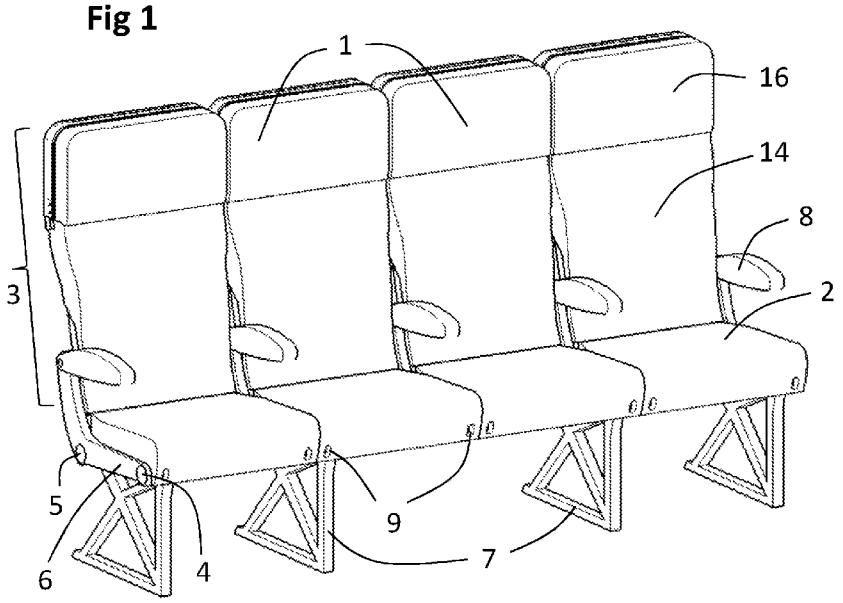

(57) Abstract: A vehicle seat such as an aircraft seat (1) comprises a seat pan (2) and a backrest (3). The backrest (3) includes a movable element (16) which is detachable from the backrest and attachable to the seat pan (2) to extend the seat pan surface. The movable element (16) may for example comprise the cushion and supporting structure of the headrest part of the backrest or may comprise just the cushion. Thus, in a row of such seats, an extended bed-like surface may be provided without adding substantially to the weight or bulk of the seat