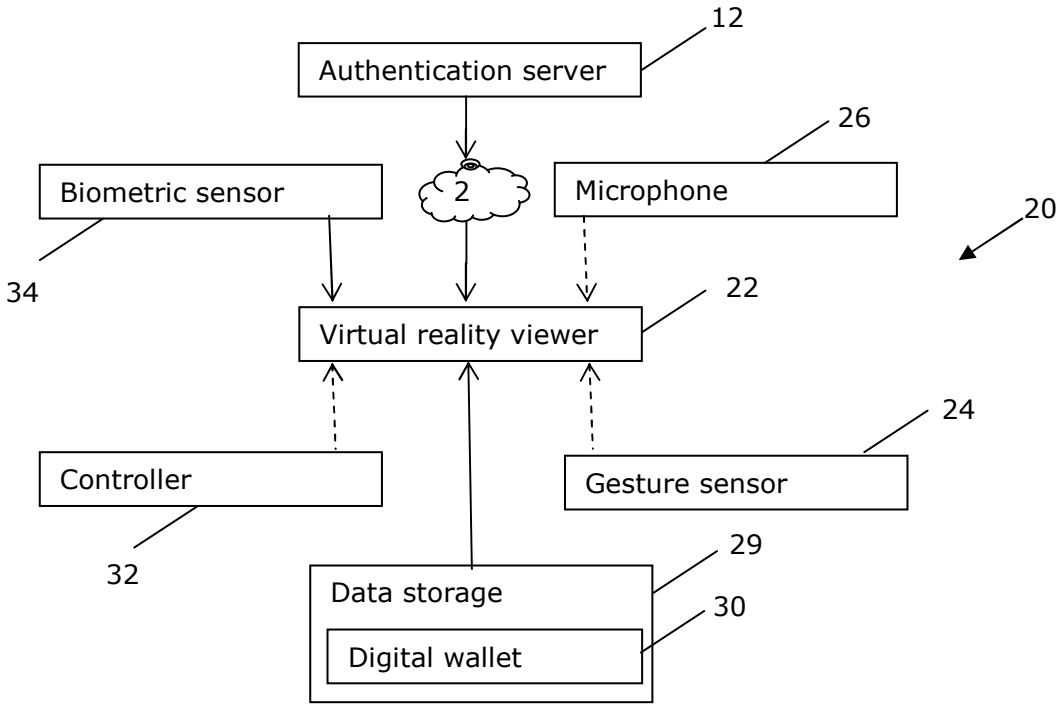

Figure 1

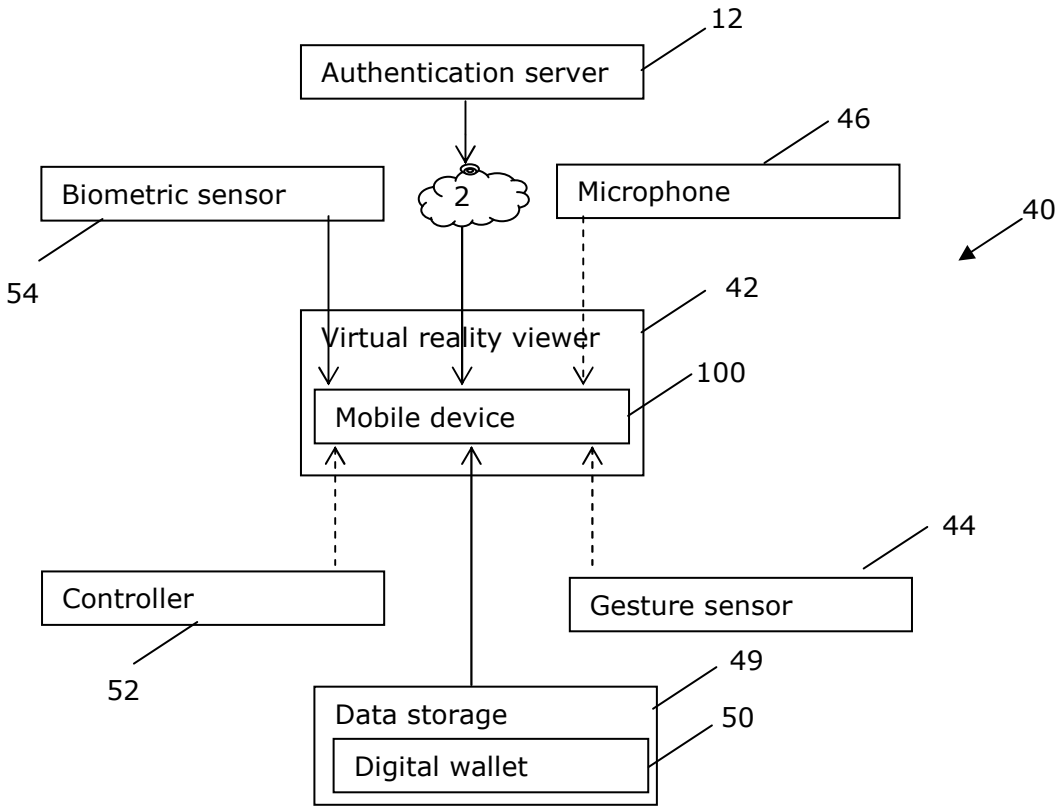

Figure 2

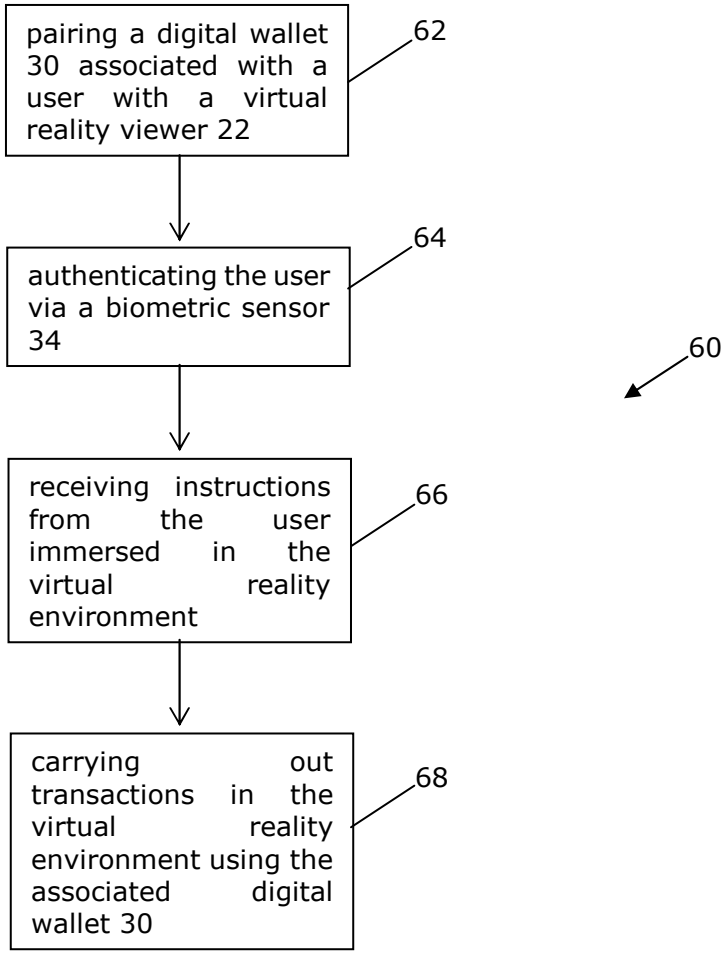
pairing a digital wallet 30 associated with a user with a virtual reality viewer 22
62
authenticating the user via a biometric sensor 34
64
60
receiving instructions from the user immersed in the virtual reality environment
66
carrying out transactions in the virtual reality environment using the associated digital wallet 30
68

Figure 3

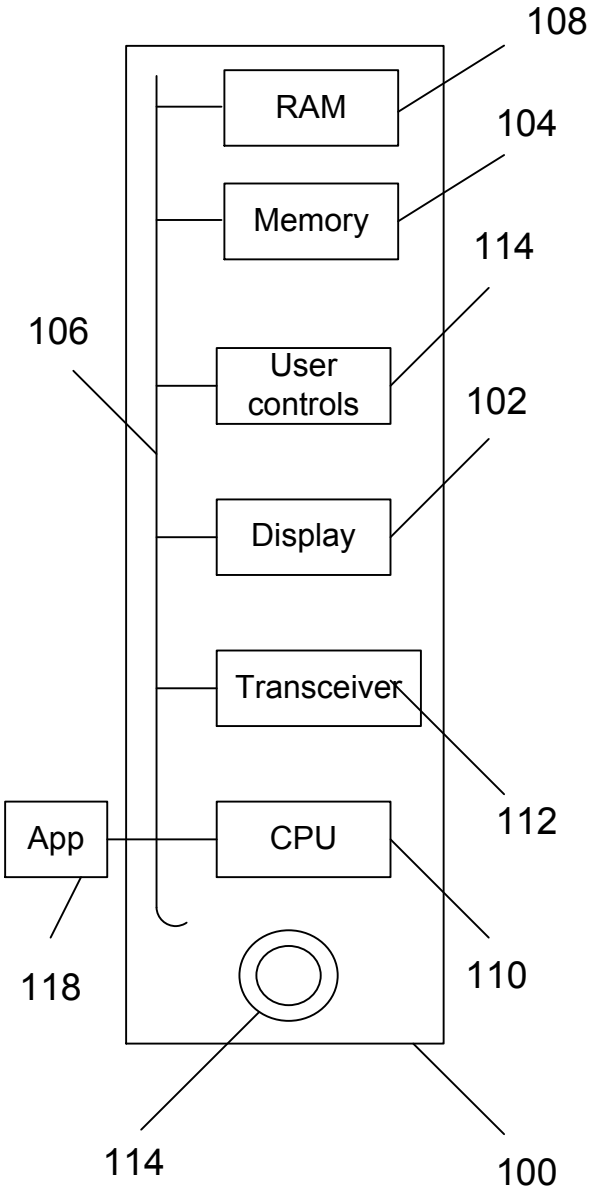
108
RAM
104
Memory
114
106
User controls
102
Display
Transceiver
112
App
CPU
110
118
114
100

Figure 4

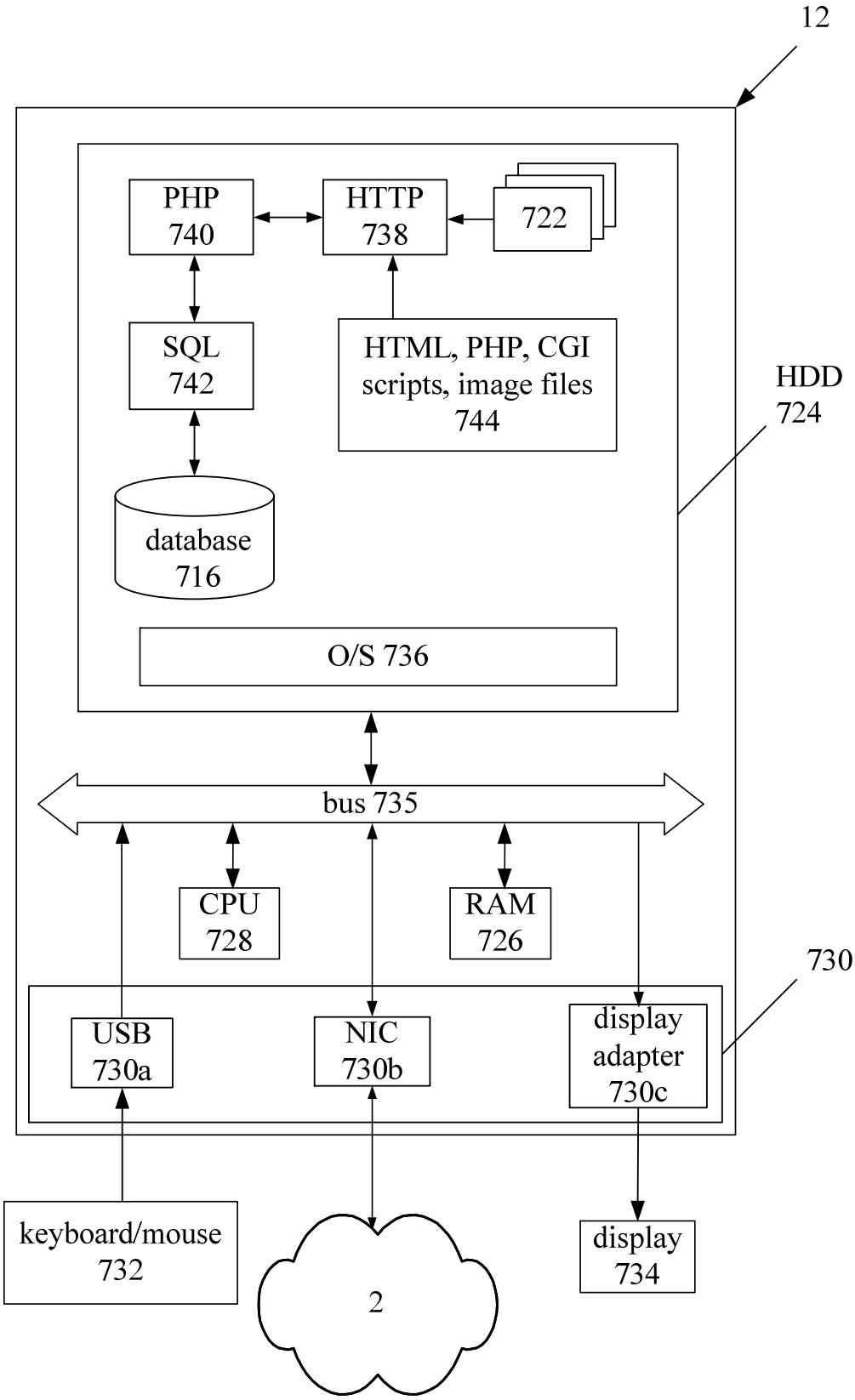
12
PHP
740
HTTP
738
722
SQL
742
HTML, PHP, CGI
scripts, image files
744
HDD
724
database
716
O/S 736
bus 735
CPU
728
RAM
726
730
USB
730a
NIC
730b
display
adapter
730c
keyboard/mouse
732
2
display
734

Figure 5