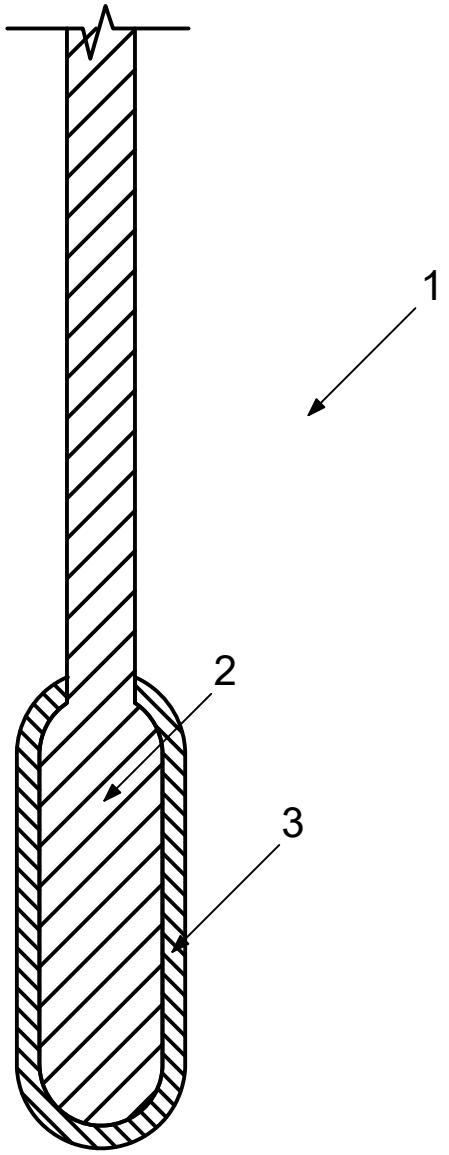


FIGURE 1

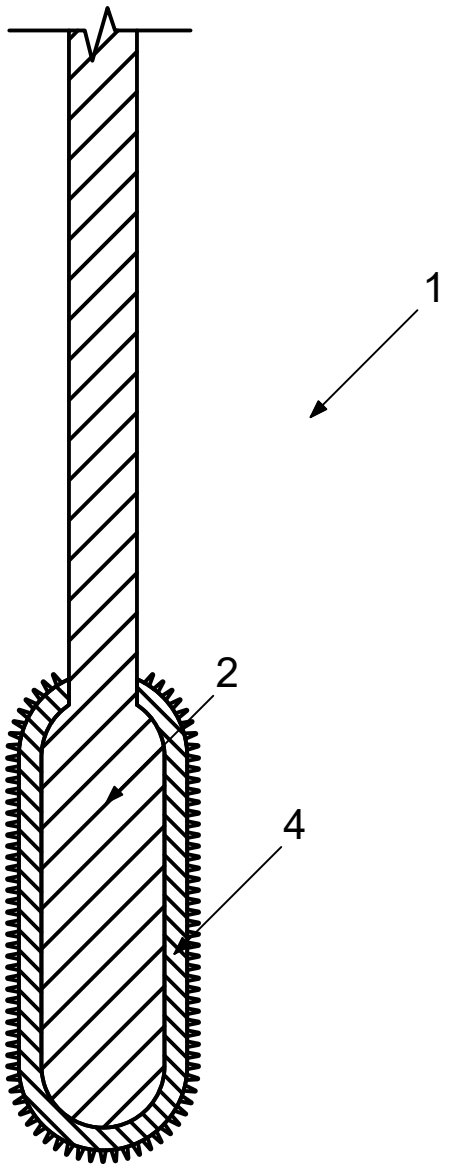


FIGURE 2