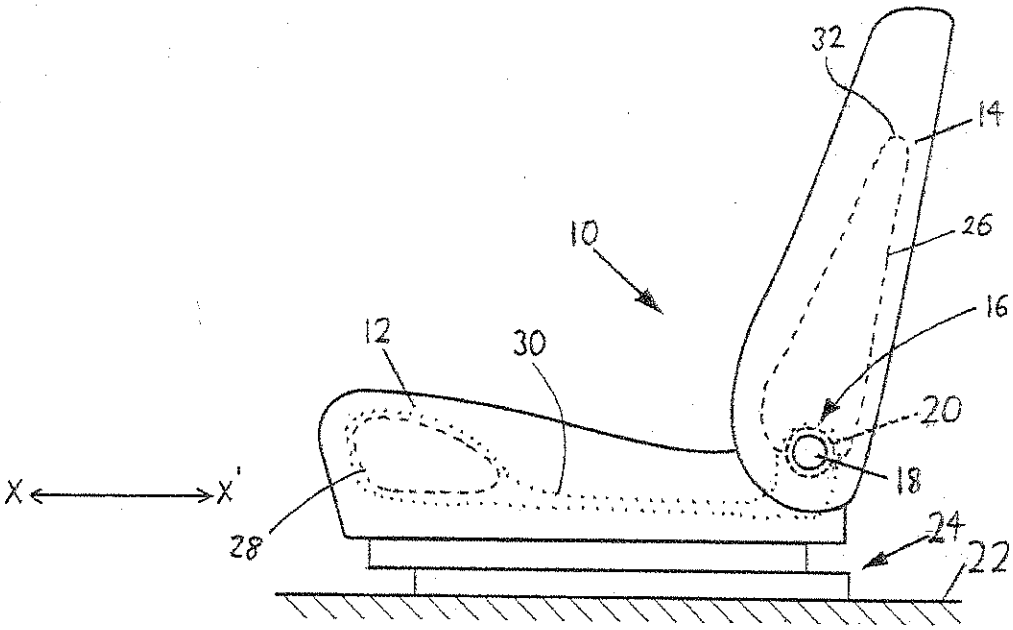
32
14
26
10
16
12
30
20
18
X
X'
28
24
22

FIG. 1

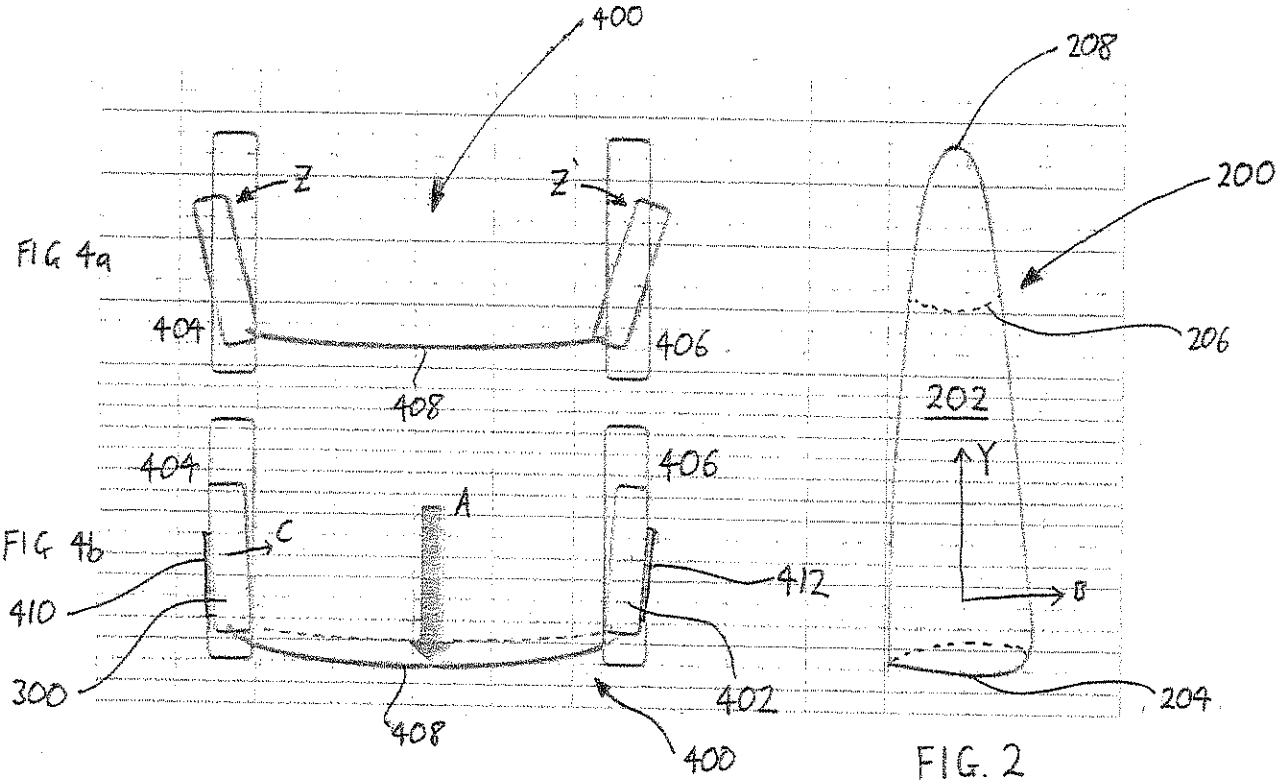
400
208
200
Z
Z'
FIG 4a
404
406
206
408
202
404
406
Y
A
FIG 4b
C
412
410
B
300
402
204
408
400

FIG. 2

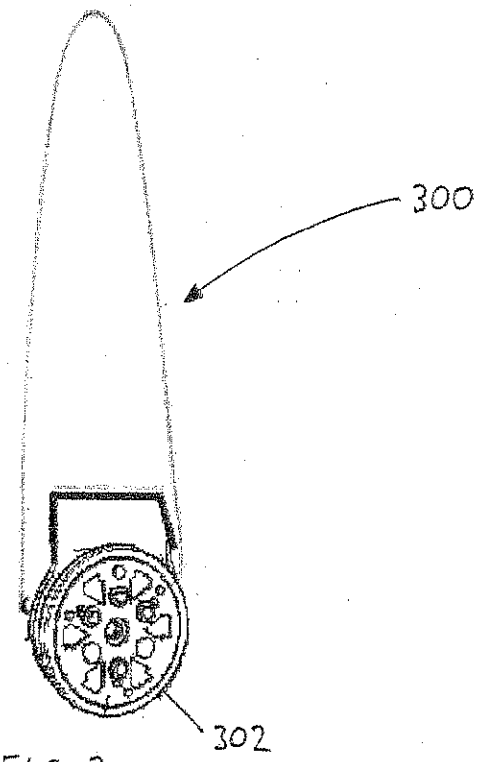
300
302

FIG. 3

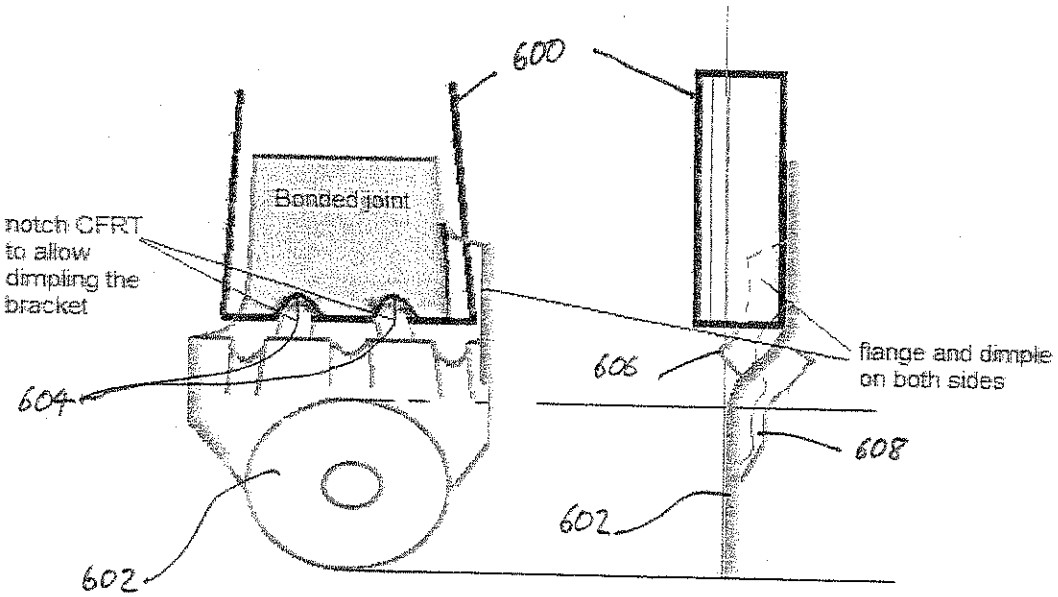
600
Bonded joint
notch CFRT to allow dimpling the bracket
604
602
606
flange and dimple on both sides
608
602

FIG 6.

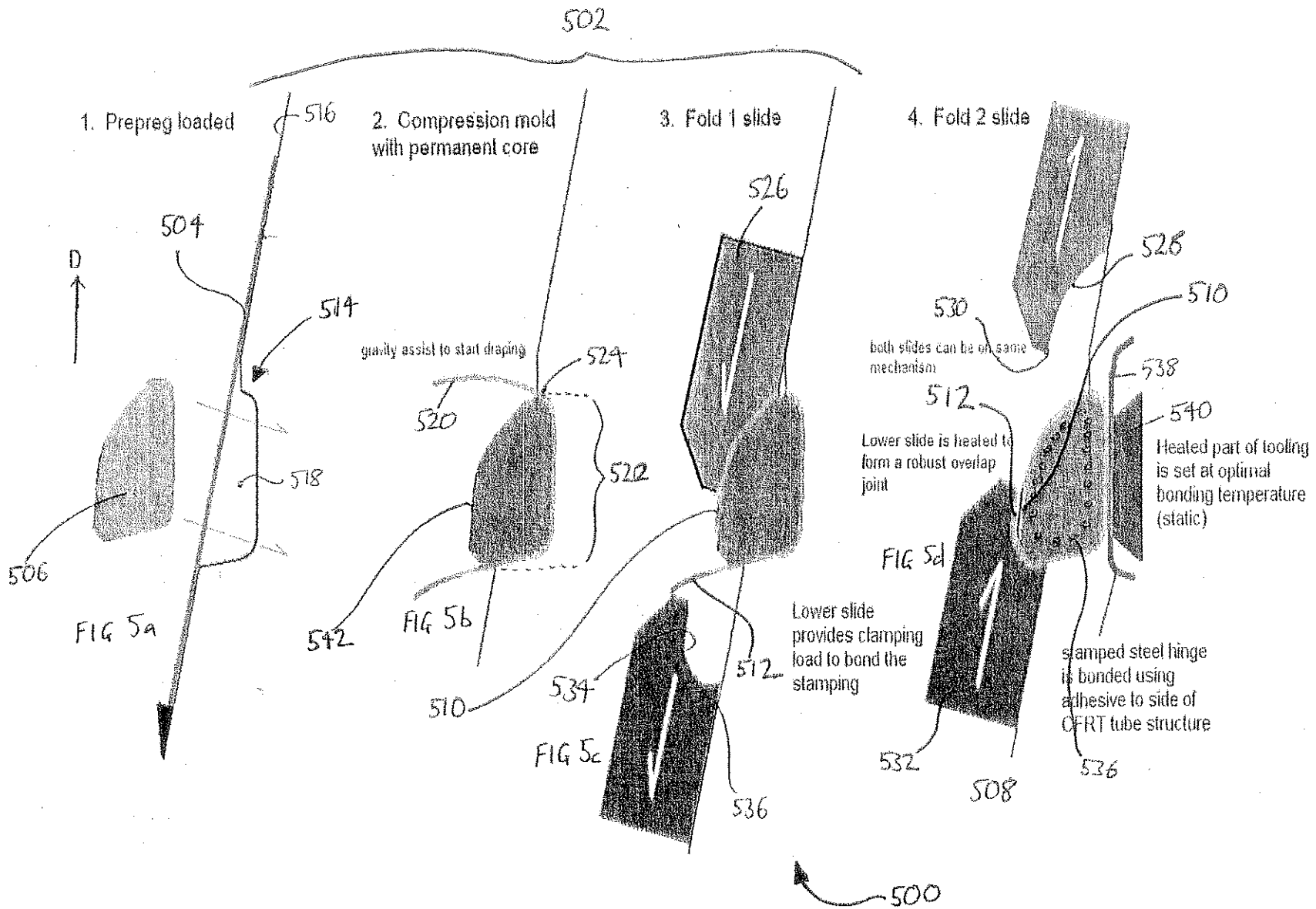
502
1. Prepreg loaded
516
504
D
514
518
506
FIG 5a
2. Compression mold with permanent core
gravity assist to start draping
524
520
522
542
FIG 5b
3. Fold 1 slide
526
510
534
512
536
Lower slide provides clamping load to bond the stamping
FIG 5c
4. Fold 2 slide
526
530
510
both slides can be on same mechanism
538
512
540
Lower slide is heated to form a robust overlap joint
Heated part of tooling is set at optimal bonding temperature (static)
FIG 5d
stamped steel hinge is bonded using adhesive to side of CFRT tube structure
532
508
536
500

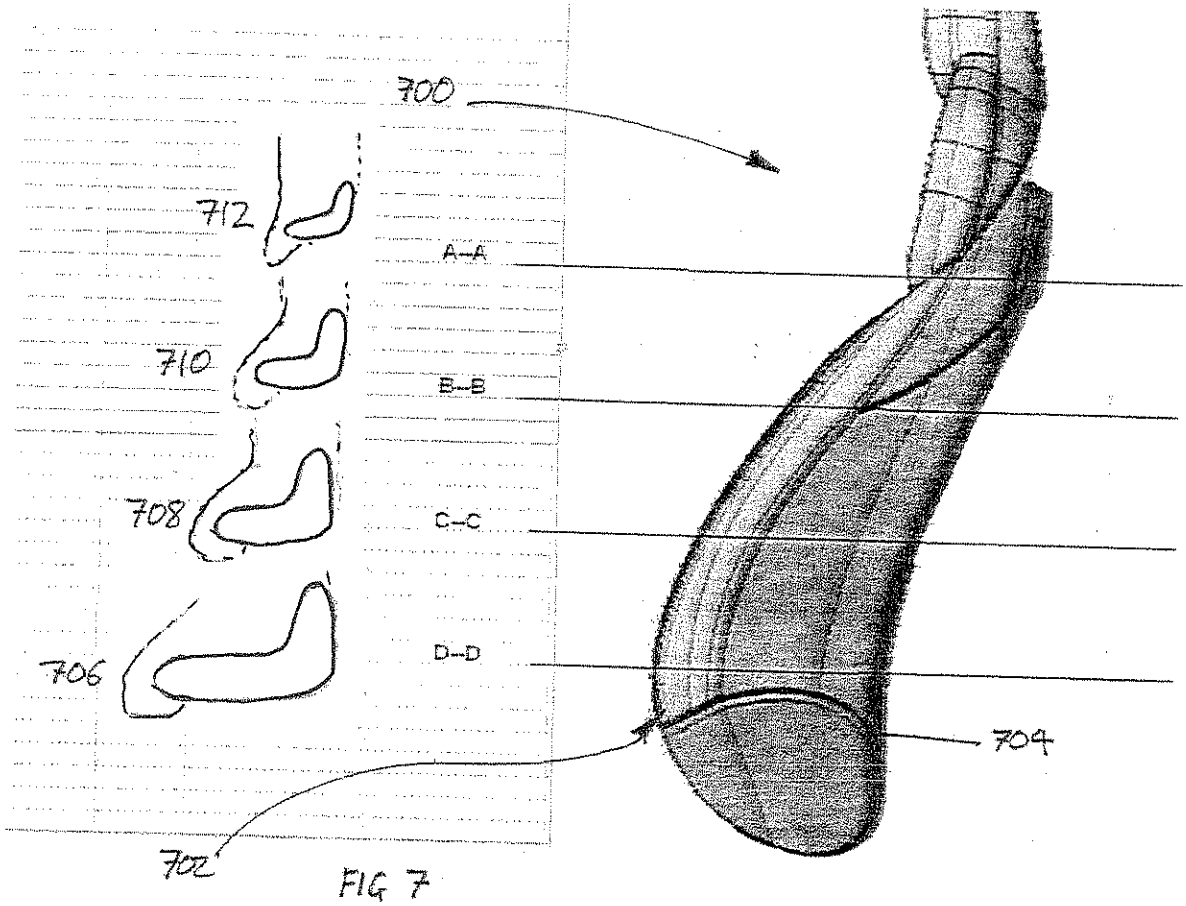

FIG 7

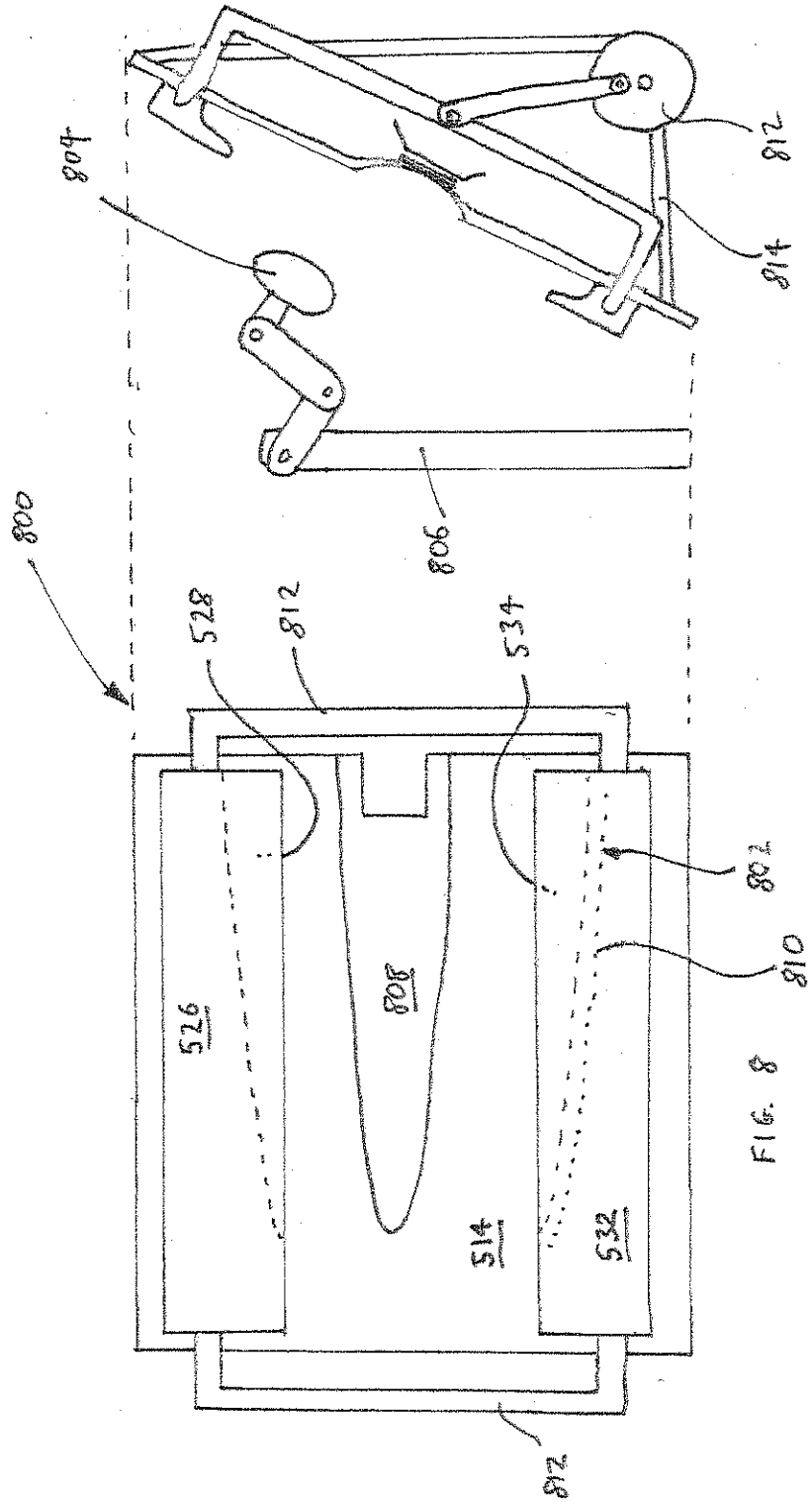

FIG. 8

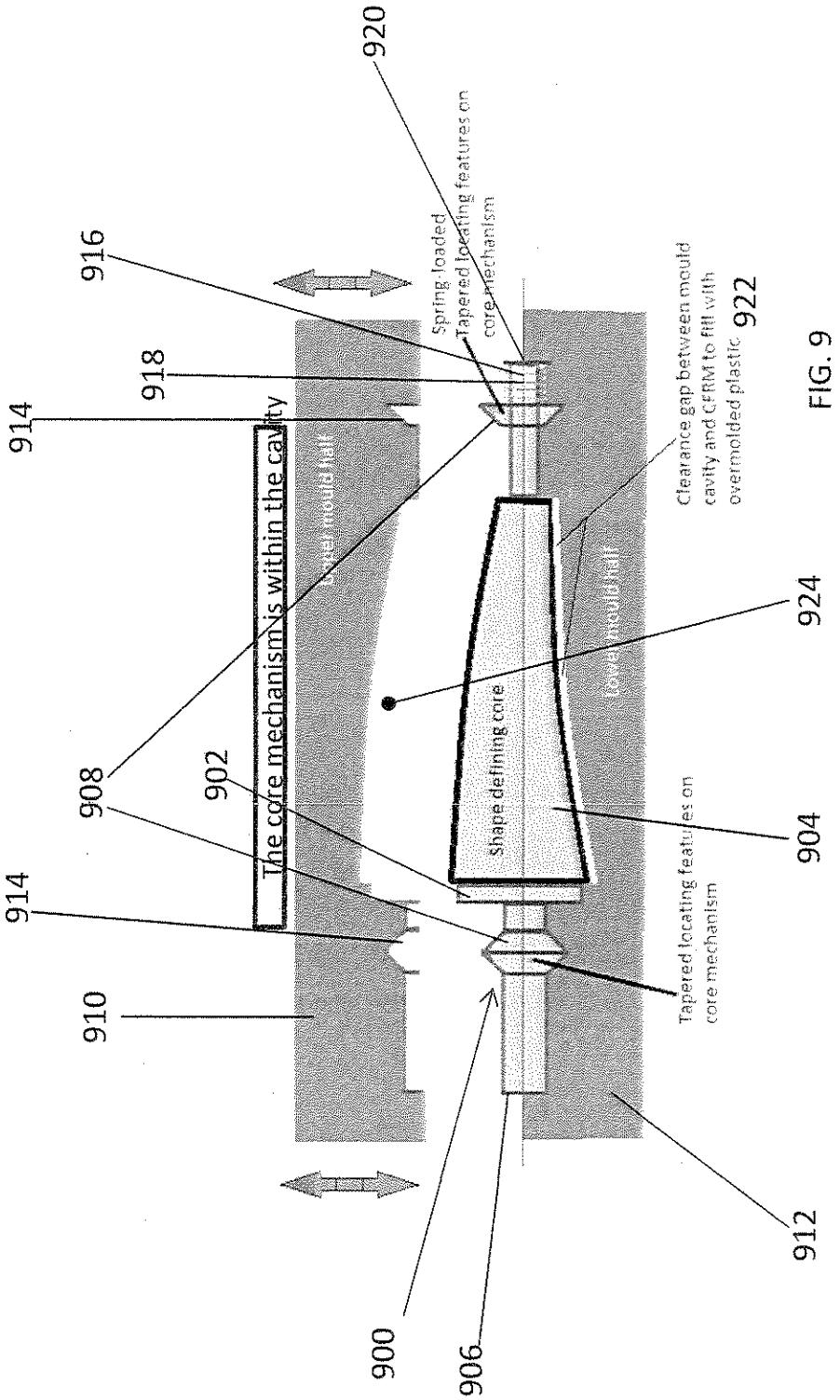
920
916
918
914
914
908
902
910
900
906
912
904
924
922
The core mechanism is within the cavity
Upper mould half
Lower mould half
Shape defining core
Spring loaded
Tapered locating features on
core mechanism
Clearance gap between mould
cavity and CFRM to fill with
overmolded plastic
Tapered locating features on
core mechanism

FIG. 9