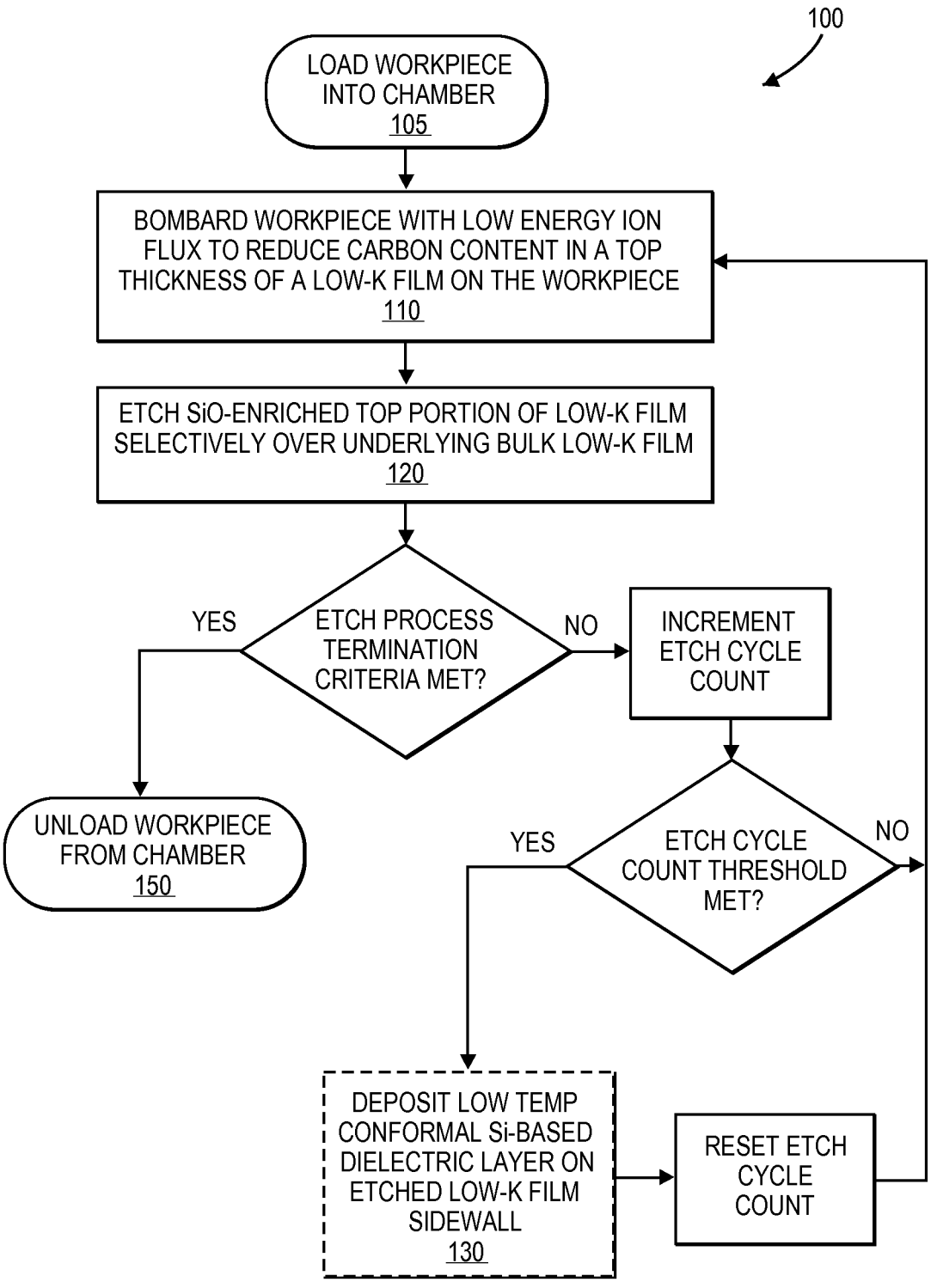
100
LOAD WORKPIECE INTO CHAMBER 105
BOMBARD WORKPIECE WITH LOW ENERGY ION FLUX TO REDUCE CARBON CONTENT IN A TOP THICKNESS OF A LOW-K FILM ON THE WORKPIECE 110
ETCH SiO-ENRICHED TOP PORTION OF LOW-K FILM SELECTIVELY OVER UNDERLYING BULK LOW-K FILM 120
ETCH PROCESS TERMINATION CRITERIA MET?
YES
NO
INCREMENT ETCH CYCLE COUNT
UNLOAD WORKPIECE FROM CHAMBER 150
ETCH CYCLE COUNT THRESHOLD MET?
YES
NO
DEPOSIT LOW TEMP CONFORMAL Si-BASED DIELECTRIC LAYER ON ETCHED LOW-K FILM SIDEWALL 130
RESET ETCH CYCLE COUNT

FIG. 1

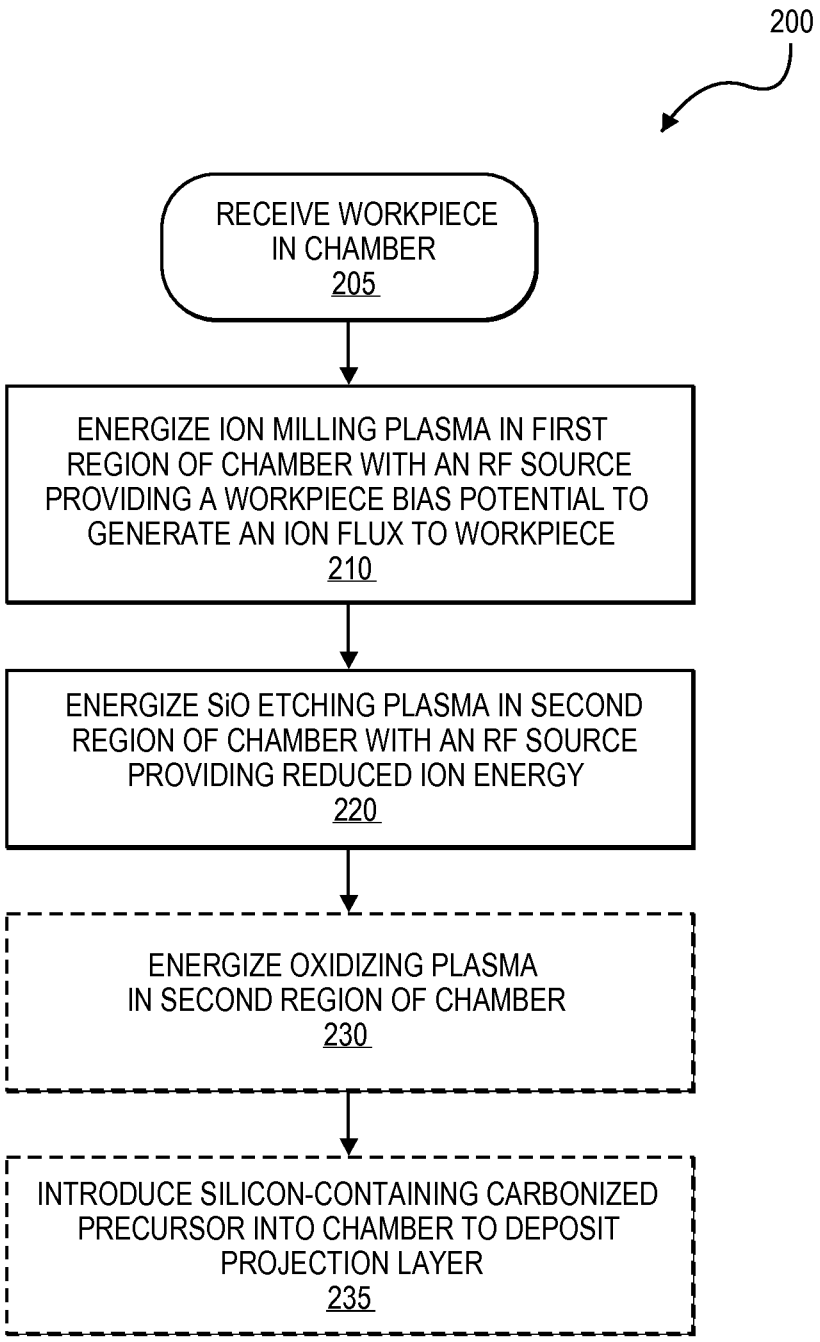
200
RECEIVE WORKPIECE IN CHAMBER 205
ENERGIZE ION MILLING PLASMA IN FIRST REGION OF CHAMBER WITH AN RF SOURCE PROVIDING A WORKPIECE BIAS POTENTIAL TO GENERATE AN ION FLUX TO WORKPIECE 210
ENERGIZE SiO ETCHING PLASMA IN SECOND REGION OF CHAMBER WITH AN RF SOURCE PROVIDING REDUCED ION ENERGY 220
ENERGIZE OXIDIZING PLASMA IN SECOND REGION OF CHAMBER 230
INTRODUCE SILICON-CONTAINING CARBONIZED PRECURSOR INTO CHAMBER TO DEPOSIT PROJECTION LAYER 235

FIG. 2

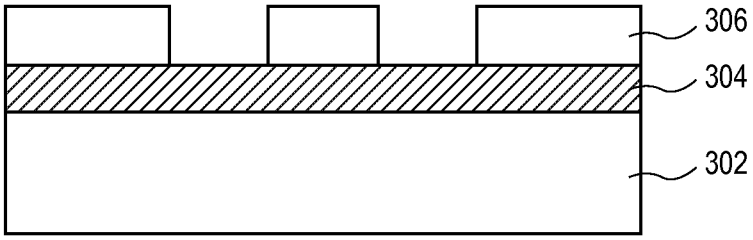

FIG. 3A

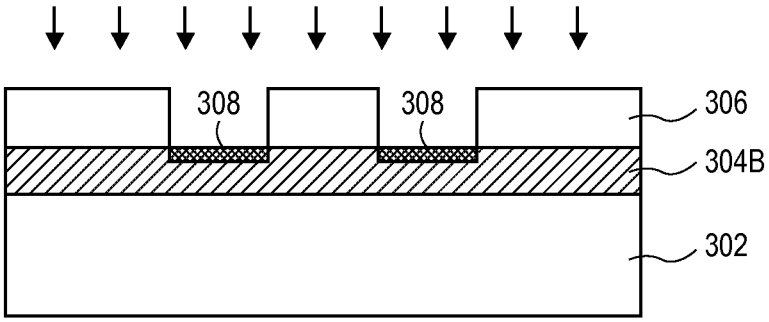

FIG. 3B

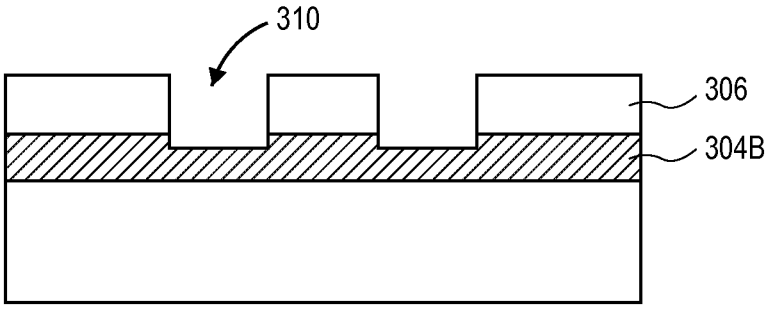

FIG. 3C

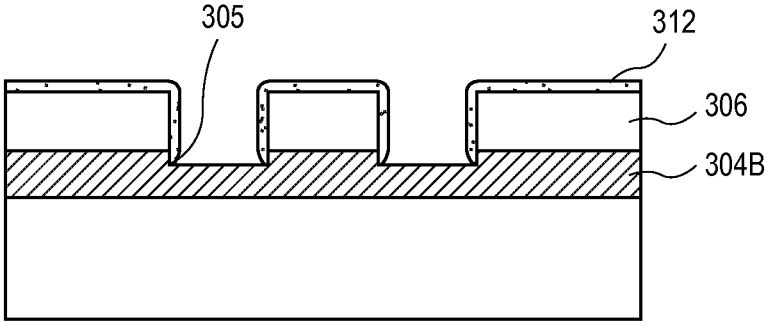

FIG. 3D

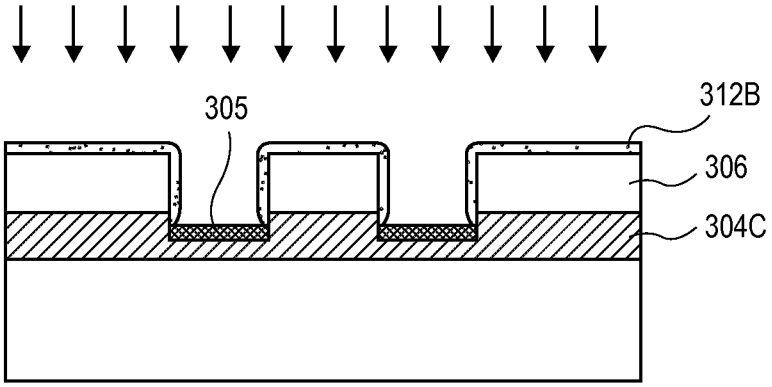

FIG. 3E

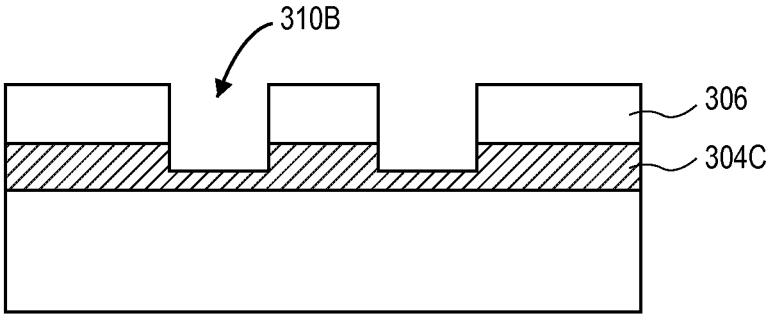

FIG. 3F

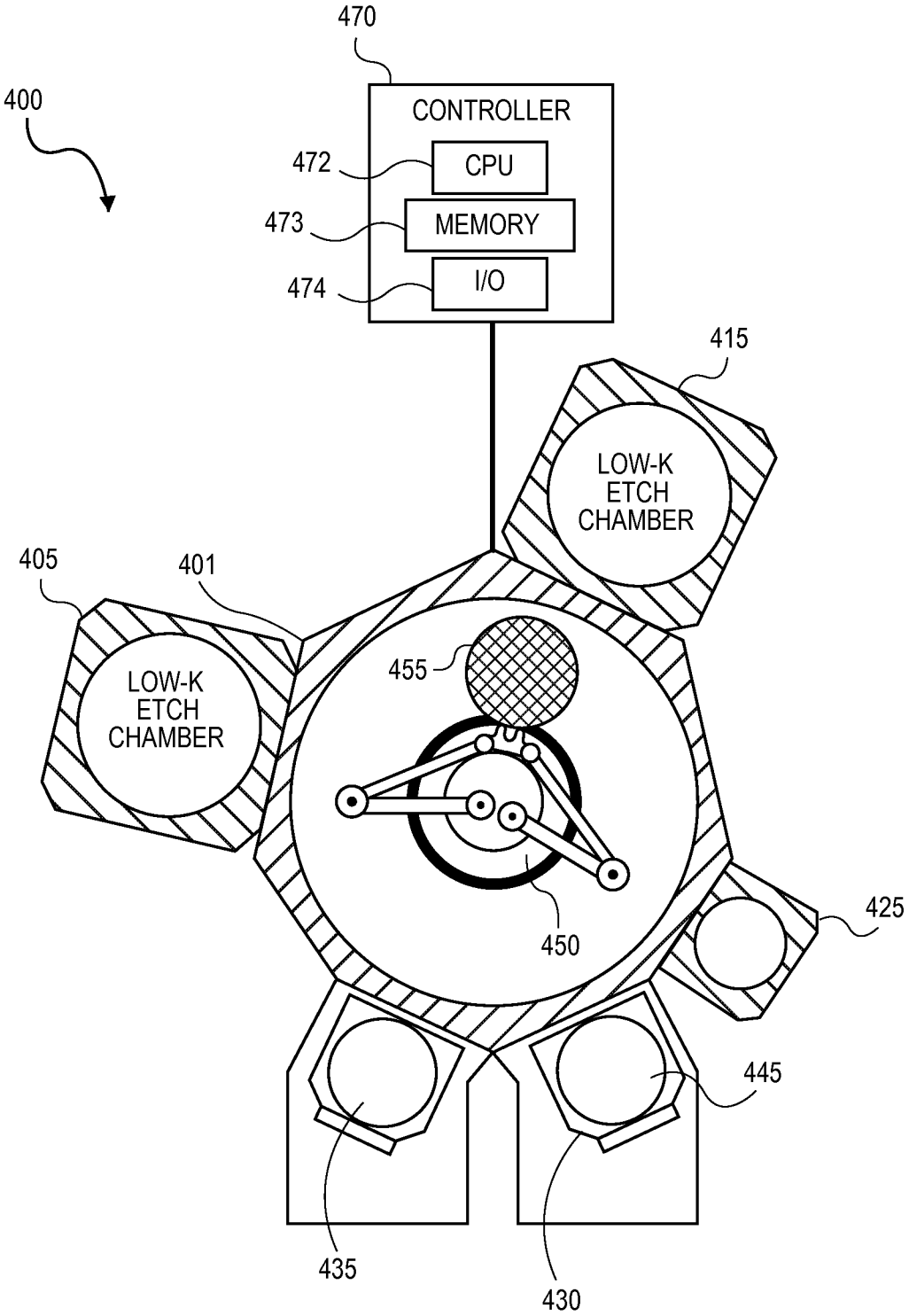
400
470
CONTROLLER
472
CPU
473
MEMORY
474
I/O
415
LOW-K
ETCH
CHAMBER
405
401
LOW-K
ETCH
CHAMBER
455
450
425
445
435
430

FIG. 4

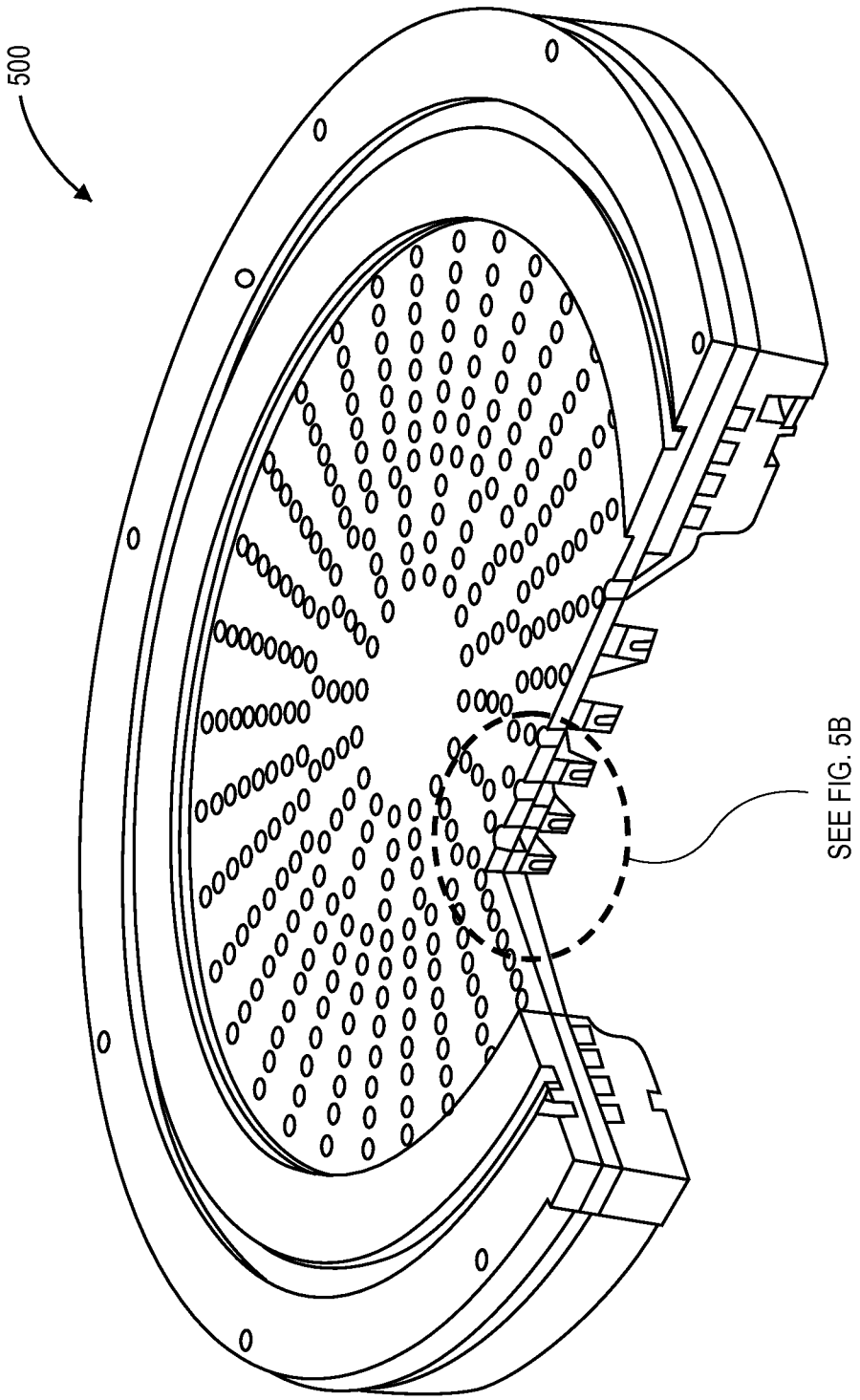

FIG. 5A

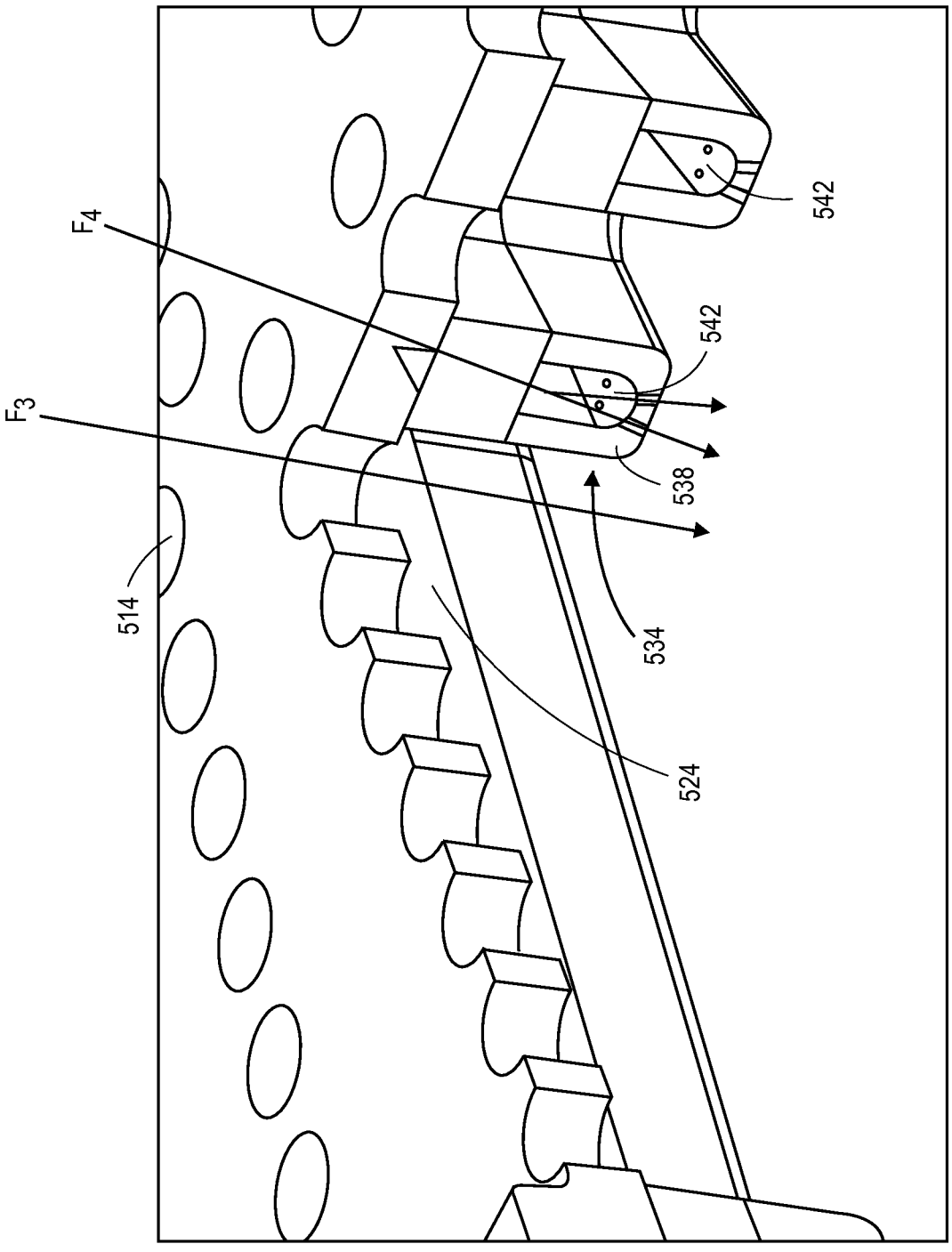

FIG. 5B

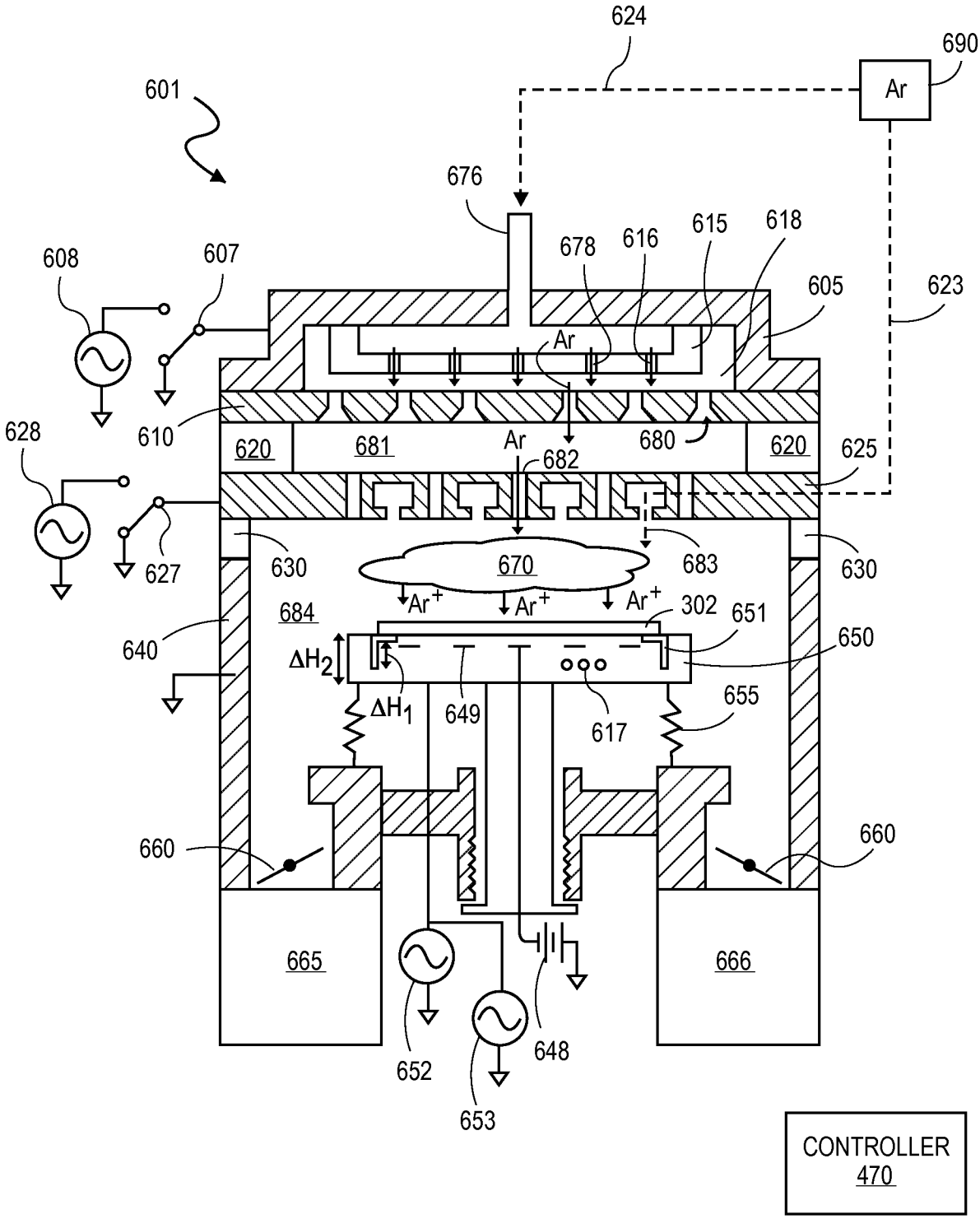
624
690
Ar
601
676
678
616
615
618
608
607
605
623
Ar
610
620
681
Ar
682
680
620
625
628
630
670
683
630
627
Ar+
Ar+
Ar+
684
302
651
640
650
ΔH2
ΔH1
649
617
655
660
660
665
666
652
653
648
CONTROLLER
470

FIG. 6A

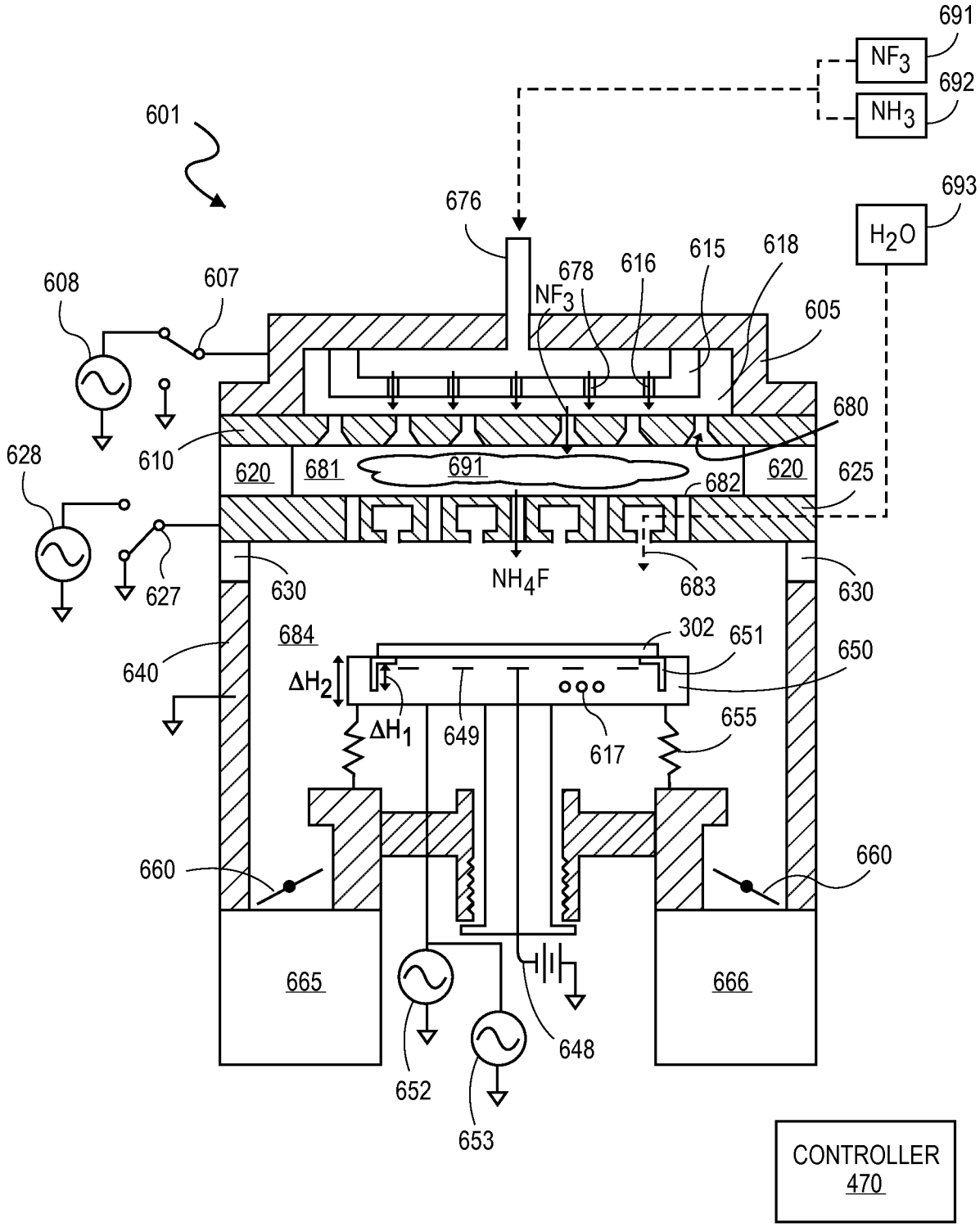
691
NF3
692
NH3
693
H2O
601
676
678
NF3
616
615
618
605
608
607
610
620
681
691
682
620
625
680
628
627
630
NH4F
683
630
684
302
651
650
640
ΔH2
ΔH1
649
617
655
660
660
665
666
652
653
648
CONTROLLER
470

FIG. 6B

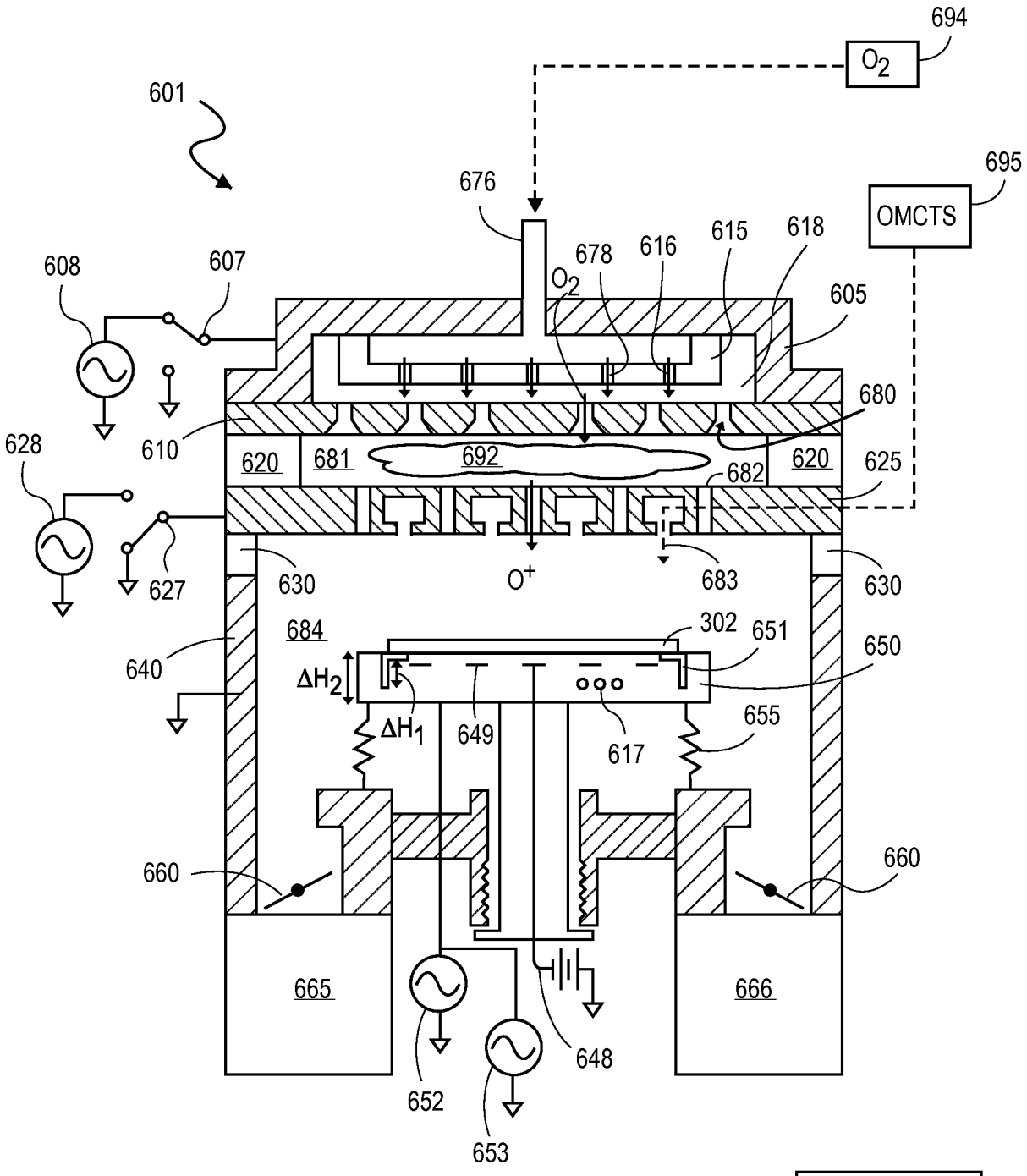
694
O_2
601
695
OMCTS
676
678
616
615
618
608
607
O_2
605
680
610
620
681
692
682
620
625
628
627
630
O^+
683
630
684
302
651
650
640
ΔH_2
ΔH_1
649
617
655
660
660
665
666
652
653
648
CONTROLLER
470

FIG. 6C

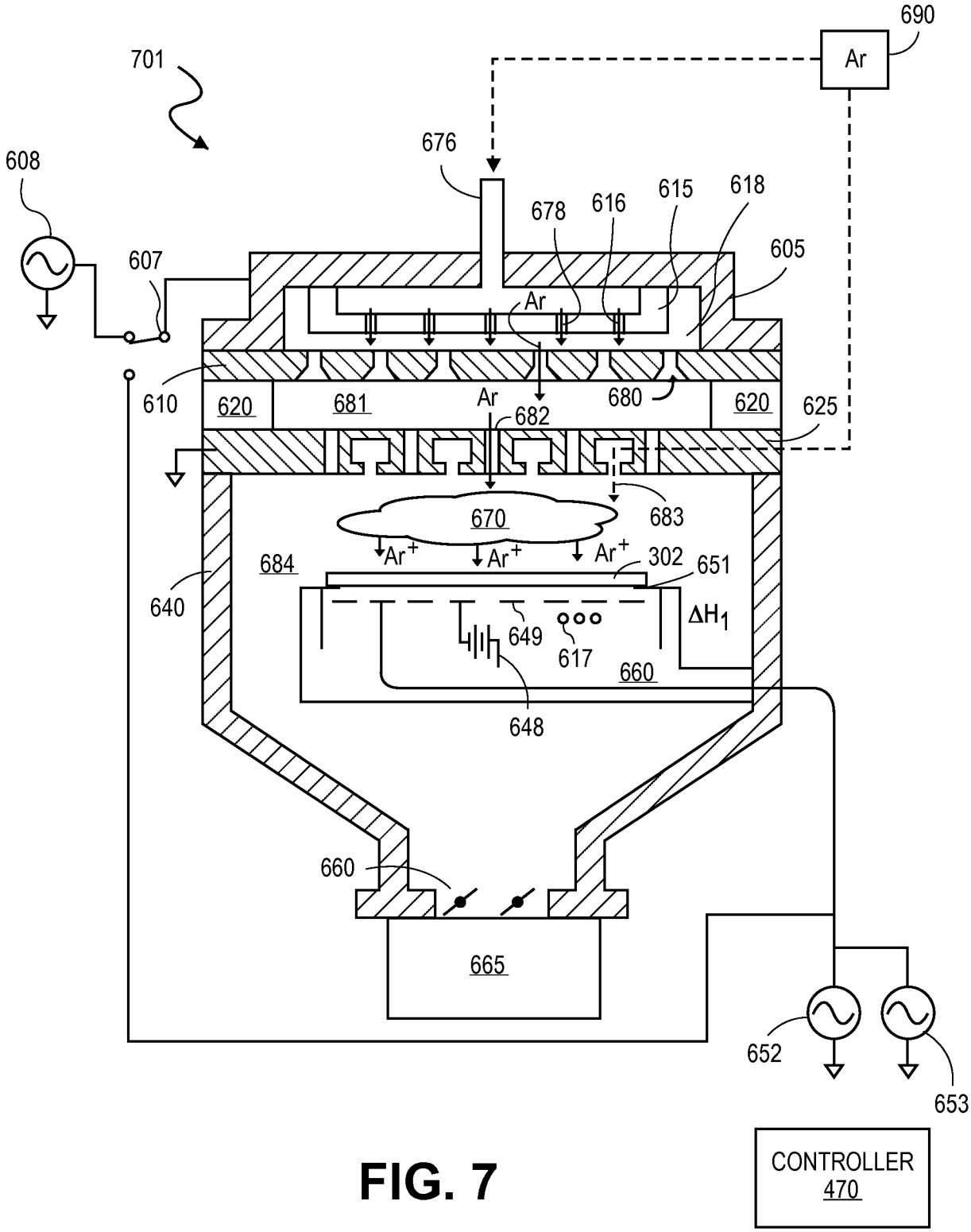
690
Ar
701
676
608
678
616
615
618
605
607
Ar
610
620
681
Ar
680
620
625
682
683
670
Ar+
Ar+
Ar+
684
302
651
640
ΔH1
649
617
660
648
660
665
652
653
CONTROLLER
470

FIG. 7

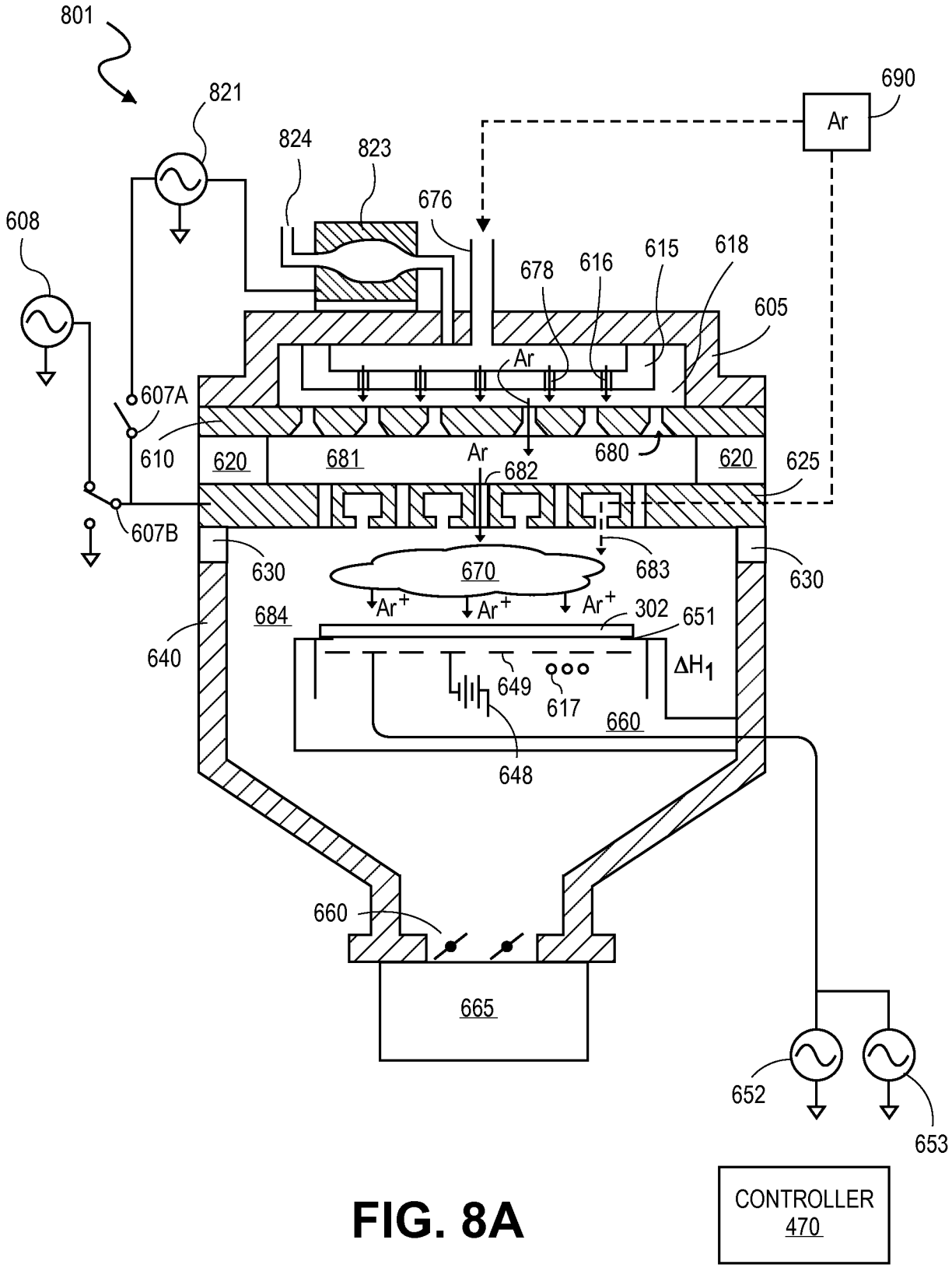
801
821
824
823
690
Ar
608
676
678
616
615
618
605
Ar
607A
610
620
681
Ar
682
680
620
625
607B
630
670
683
630
Ar+
Ar+
Ar+
684
302
651
640
ΔH1
649
617
660
648
660
665
652
653
CONTROLLER
470

FIG. 8A

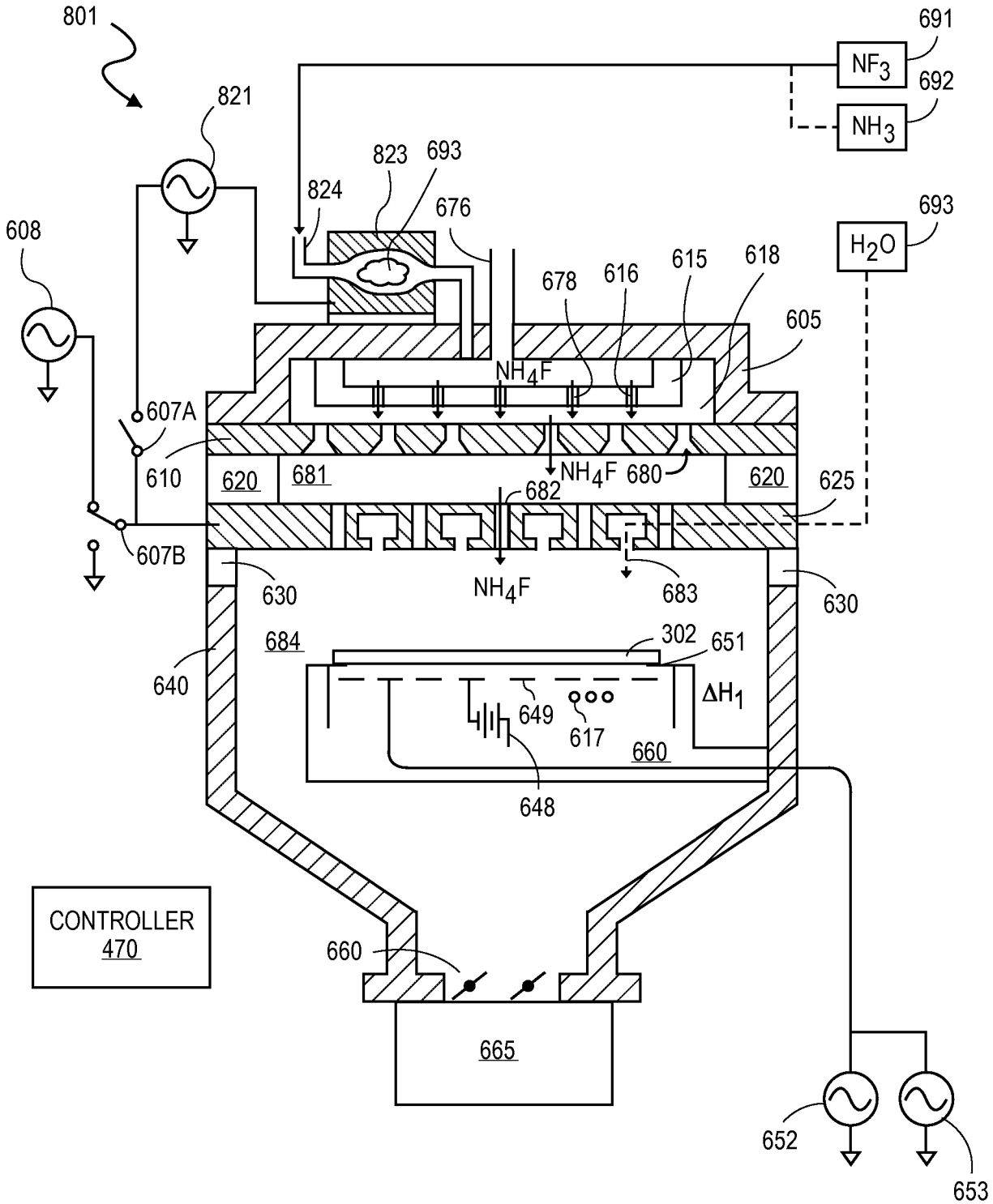
801
691
NF_3
692
NH_3
821
823
693
824
676
693
H_2O
608
678
616
615
618
605
NH_4F
607A
610
620
681
NH_4F
680
620
625
682
607B
630
NH_4F
683
630
684
302
651
640
649
617
ΔH_1
660
648
CONTROLLER
470
660
665
652
653

FIG. 8B

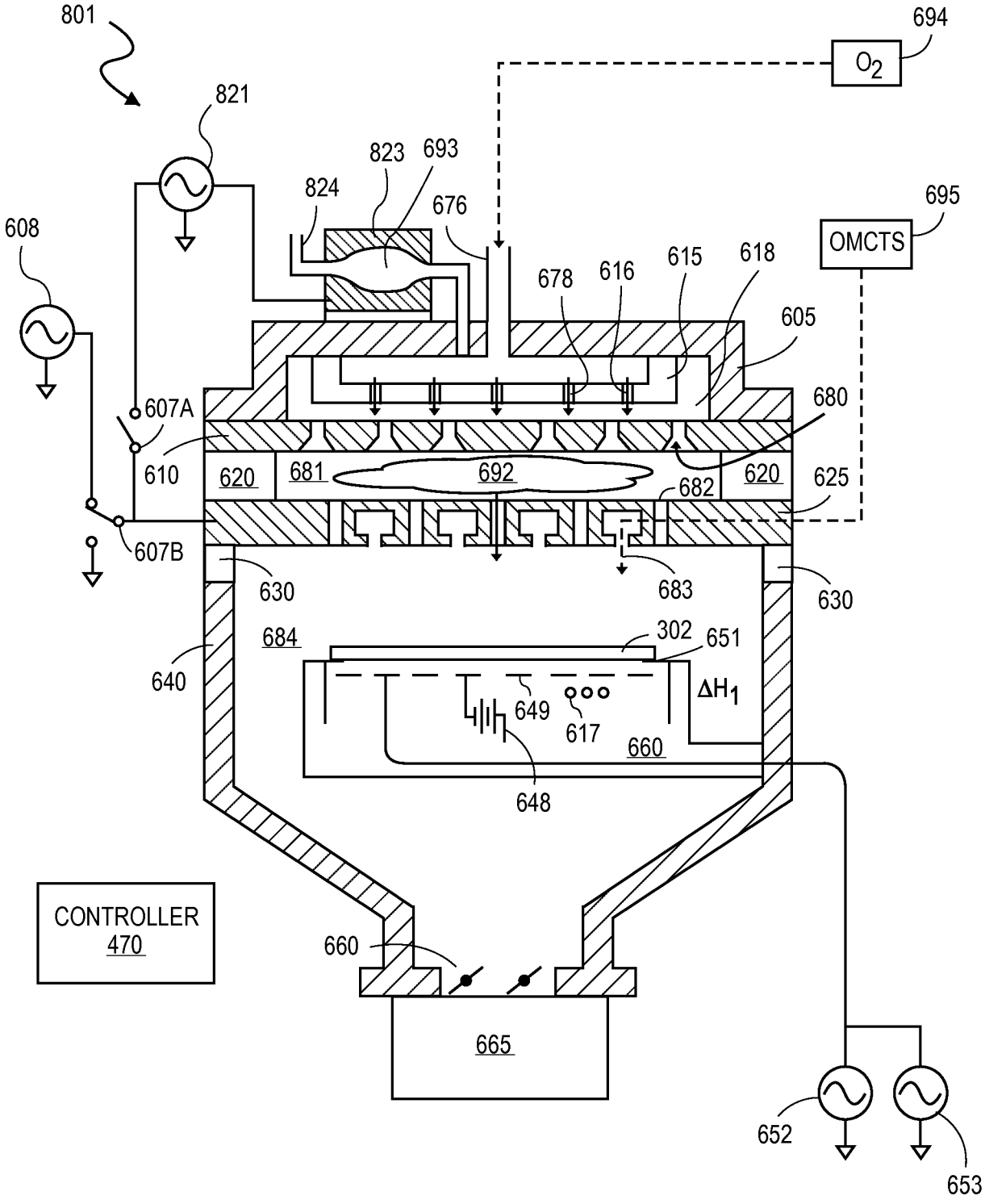
801
694
O_2
821
823
693
824
676
695
OMCTS
608
678
616
615
618
605
607A
680
610
620
681
692
620
625
682
607B
630
683
630
684
302
651
640
649
617
ΔH_1
660
648
CONTROLLER
470
660
665
652
653

FIG. 8C

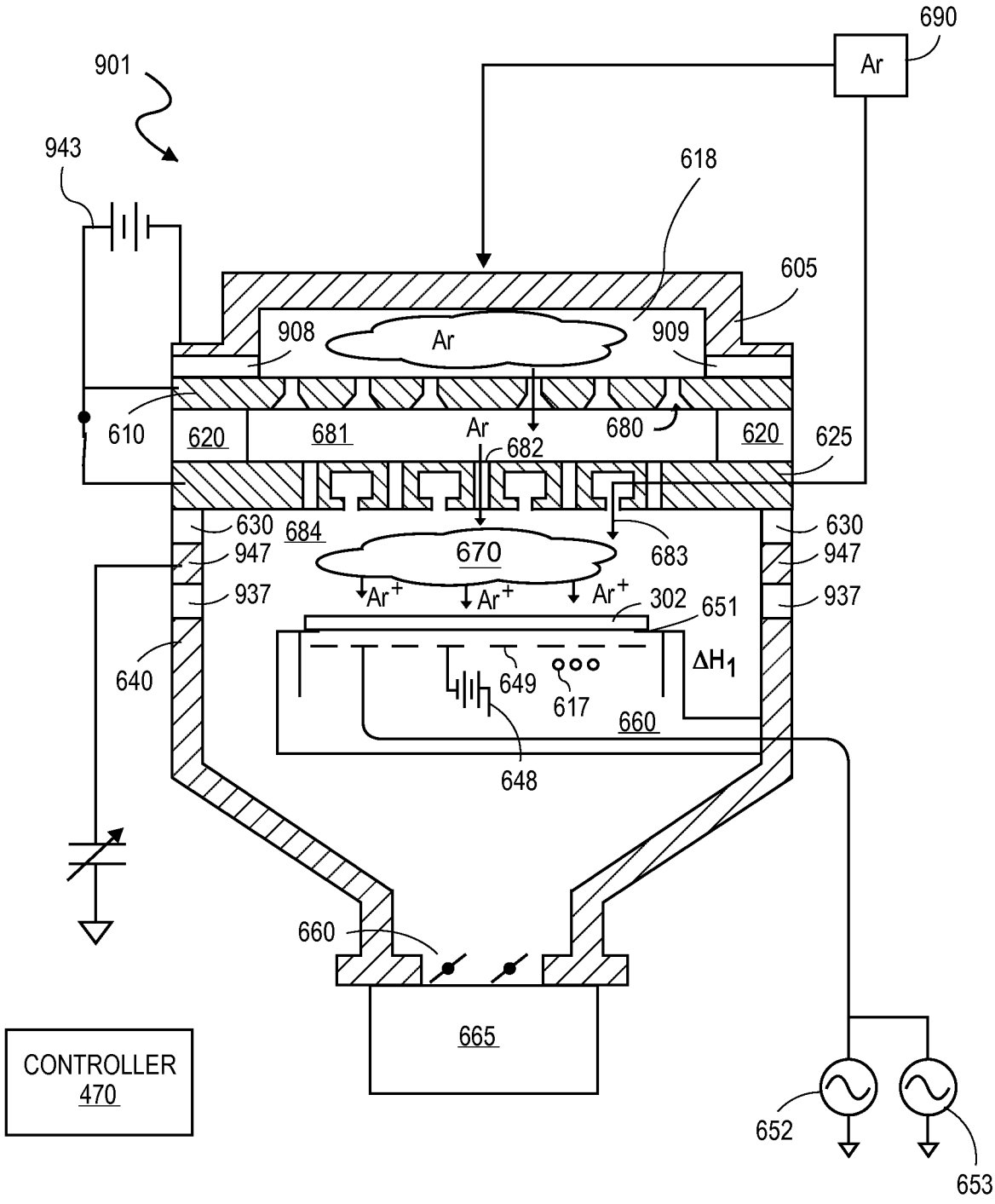
690
Ar
901
943
618
605
908
Ar
909
610
620
681
Ar
680
620
625
682
630
684
630
947
670
947
683
937
Ar+
Ar+
Ar+
302
651
937
640
649
617
ΔH1
660
648
660
665
CONTROLLER
470
652
653

FIG. 9A

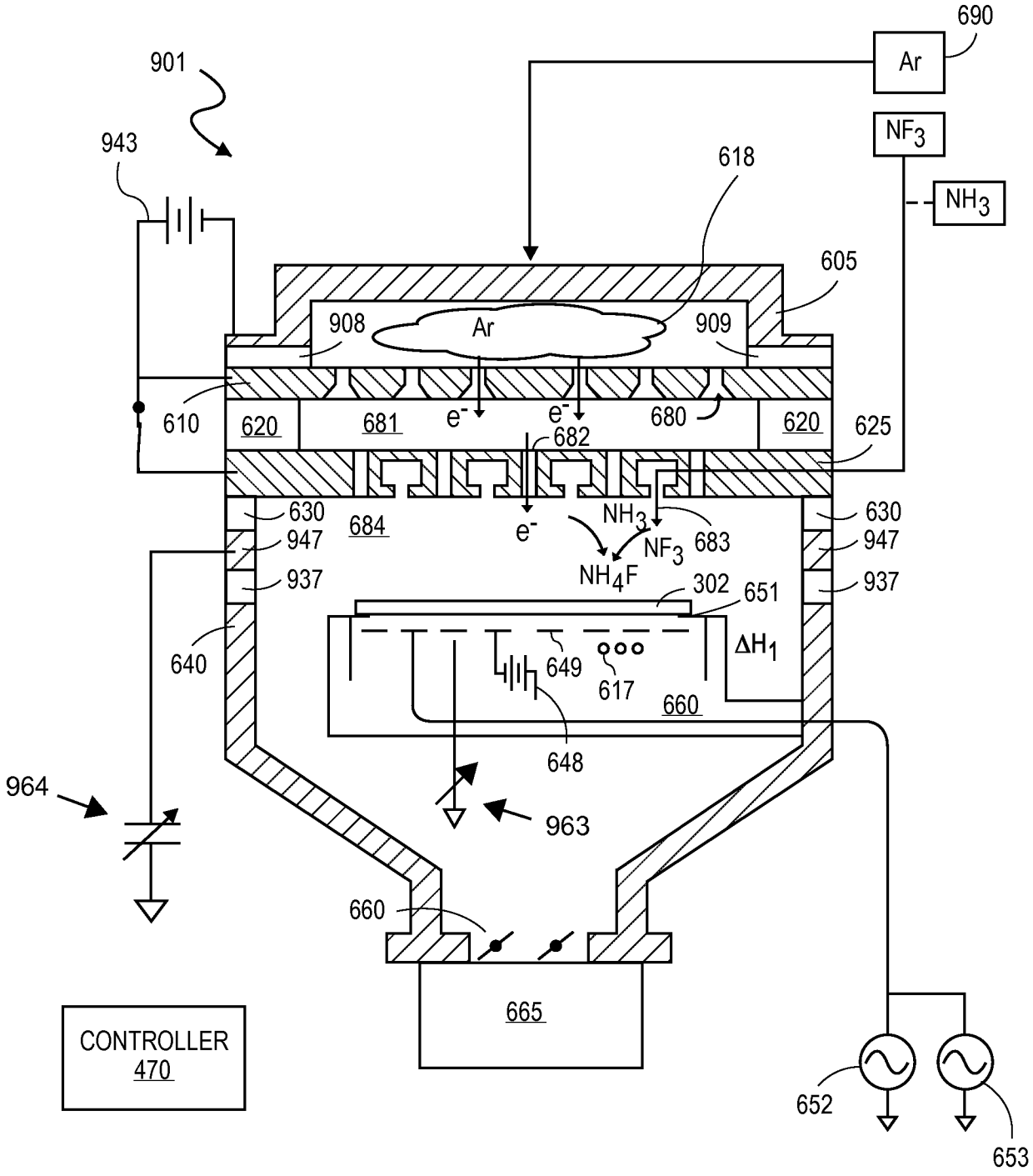
901
943
690
Ar
NF3
NH3
618
605
908
Ar
909
610
620
681
e-
e-
680
620
625
682
630
684
947
937
e-
NH3
NF3
683
NH4F
630
947
937
302
651
640
649
617
ΔH1
660
648
964
963
660
665
CONTROLLER
470
652
653

FIG. 9B

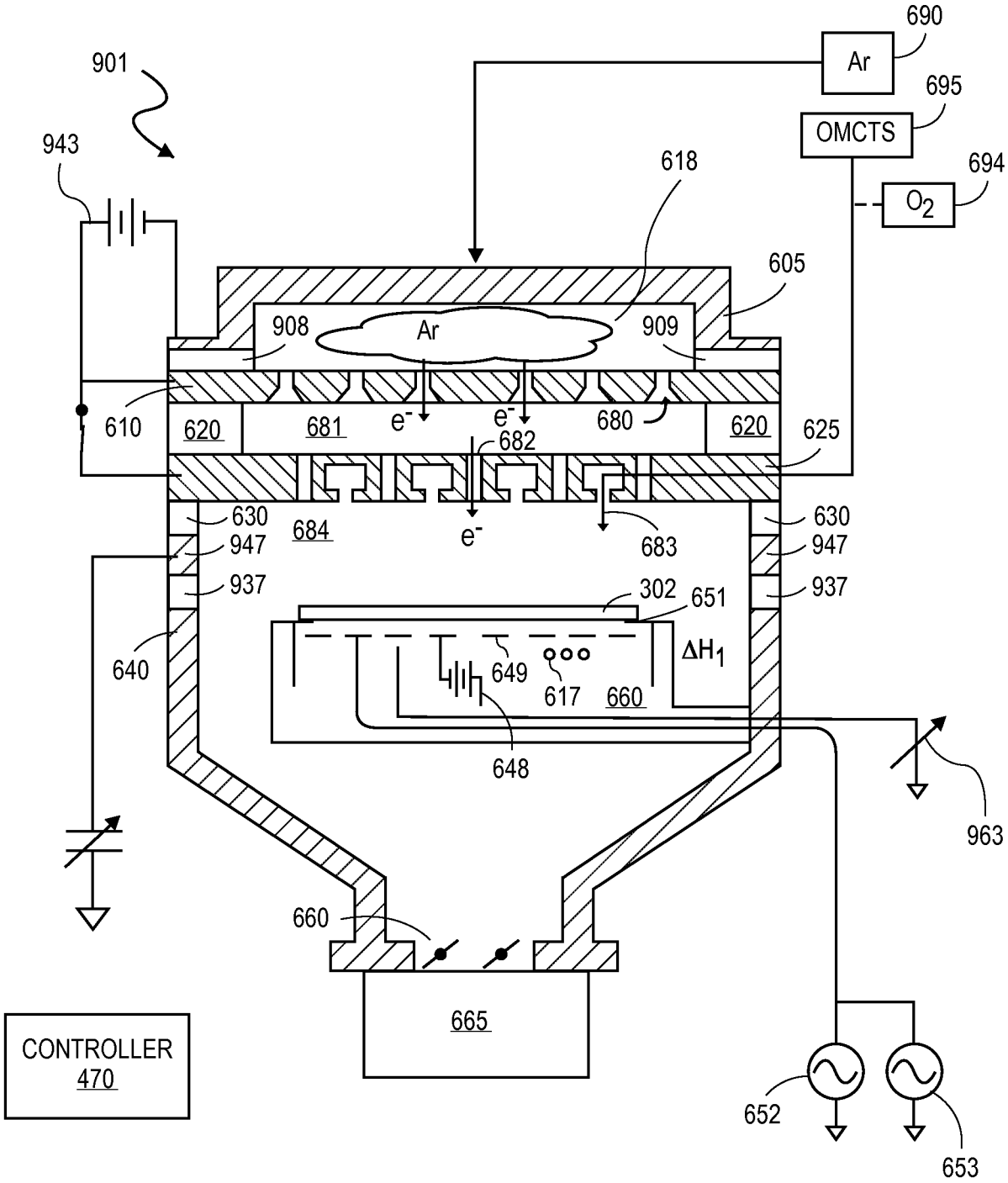
901
943
690
Ar
695
OMCTS
694
O_2
618
605
908
Ar
909
610
620
681
e^-
e^-
680
682
620
625
630
684
947
937
e^-
683
630
947
937
302
651
640
649
617
660
ΔH_1
648
963
660
665
CONTROLLER
470
652
653

FIG. 9C

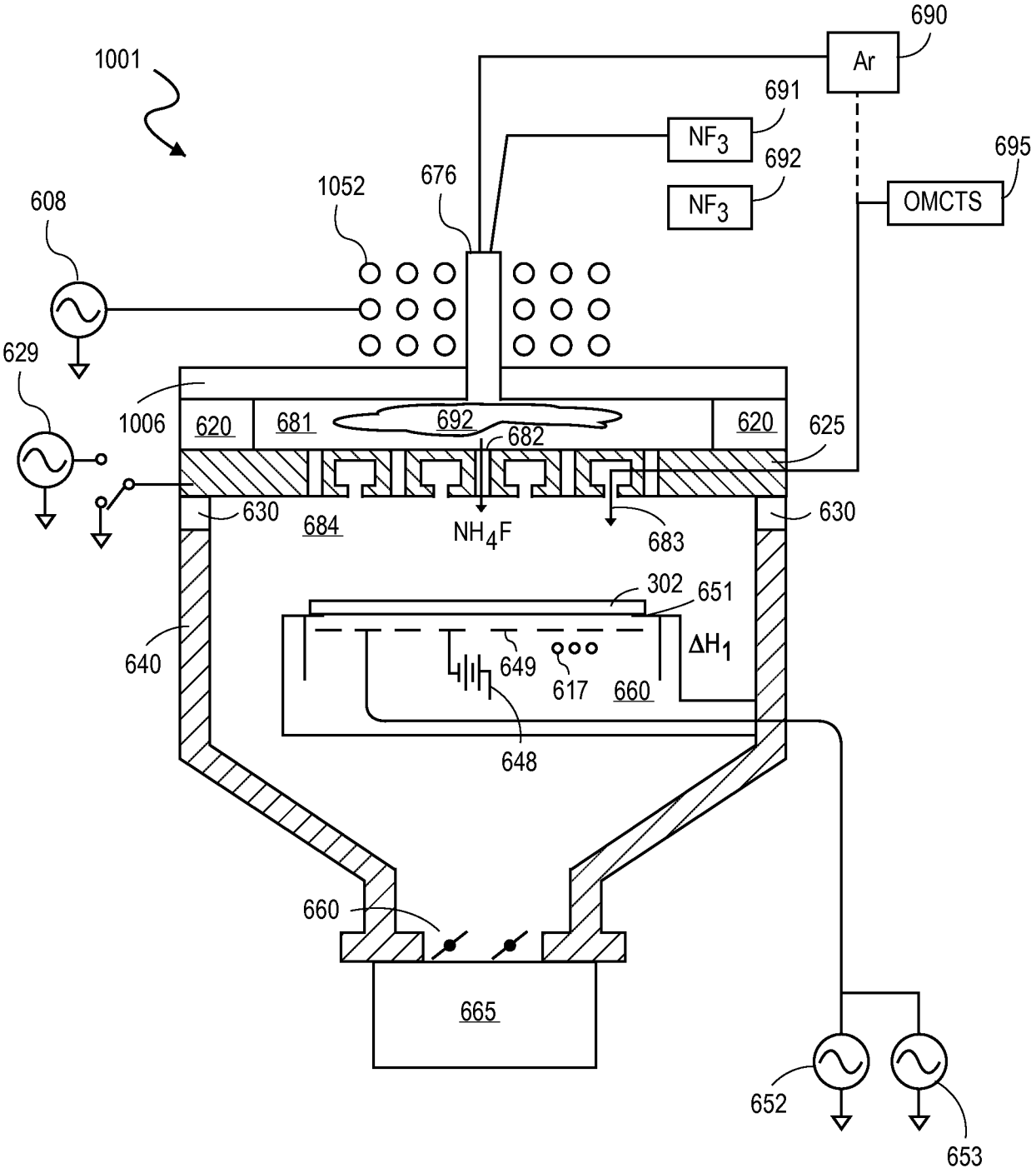
1001
690
Ar
691
NF3
692
NF3
695
OMCTS
608
1052
676
629
1006
620
681
692
620
625
682
630
684
NH4F
683
630
302
651
ΔH1
640
649
617
660
648
660
665
652
653

FIG. 10