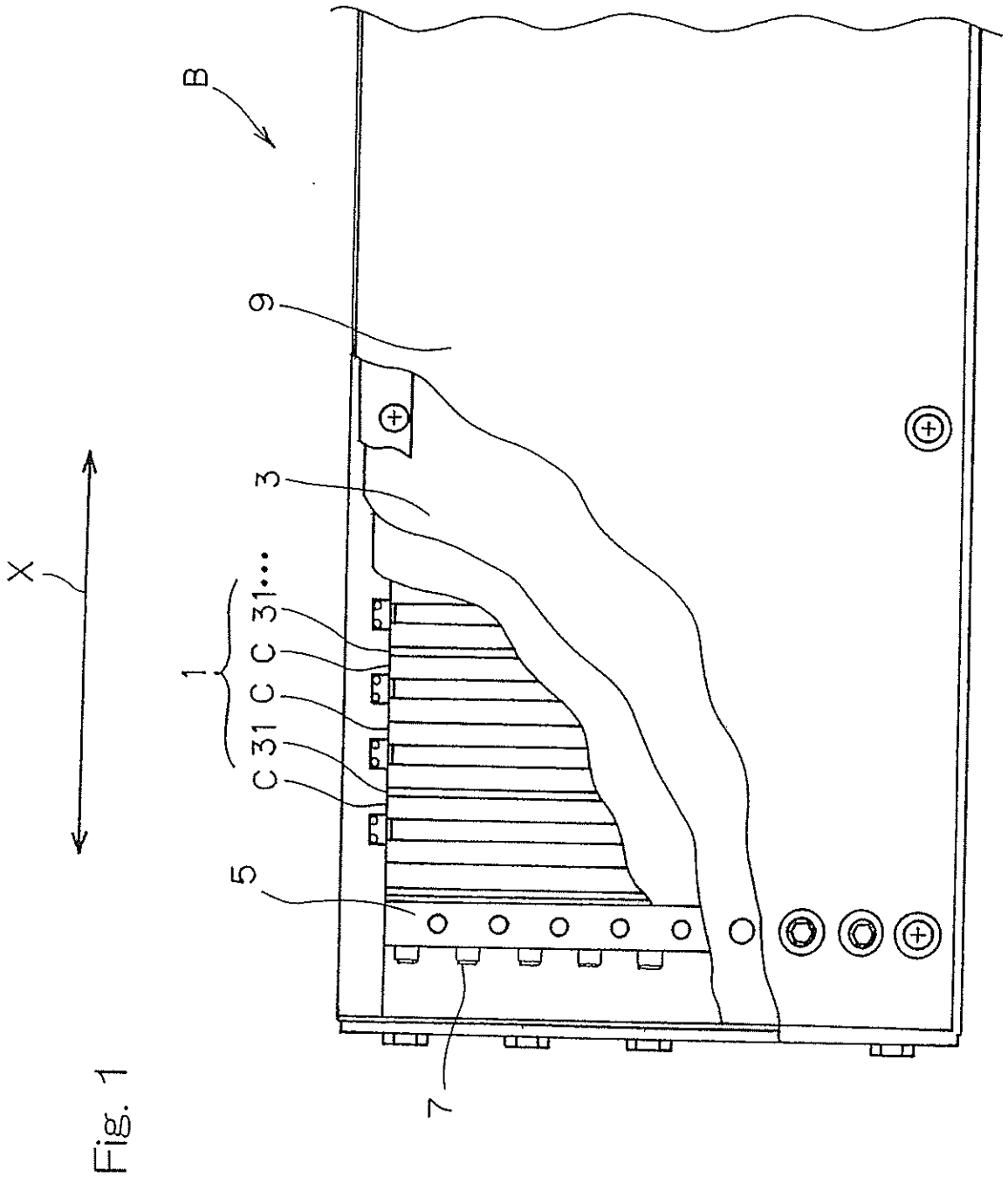

Fig. 1

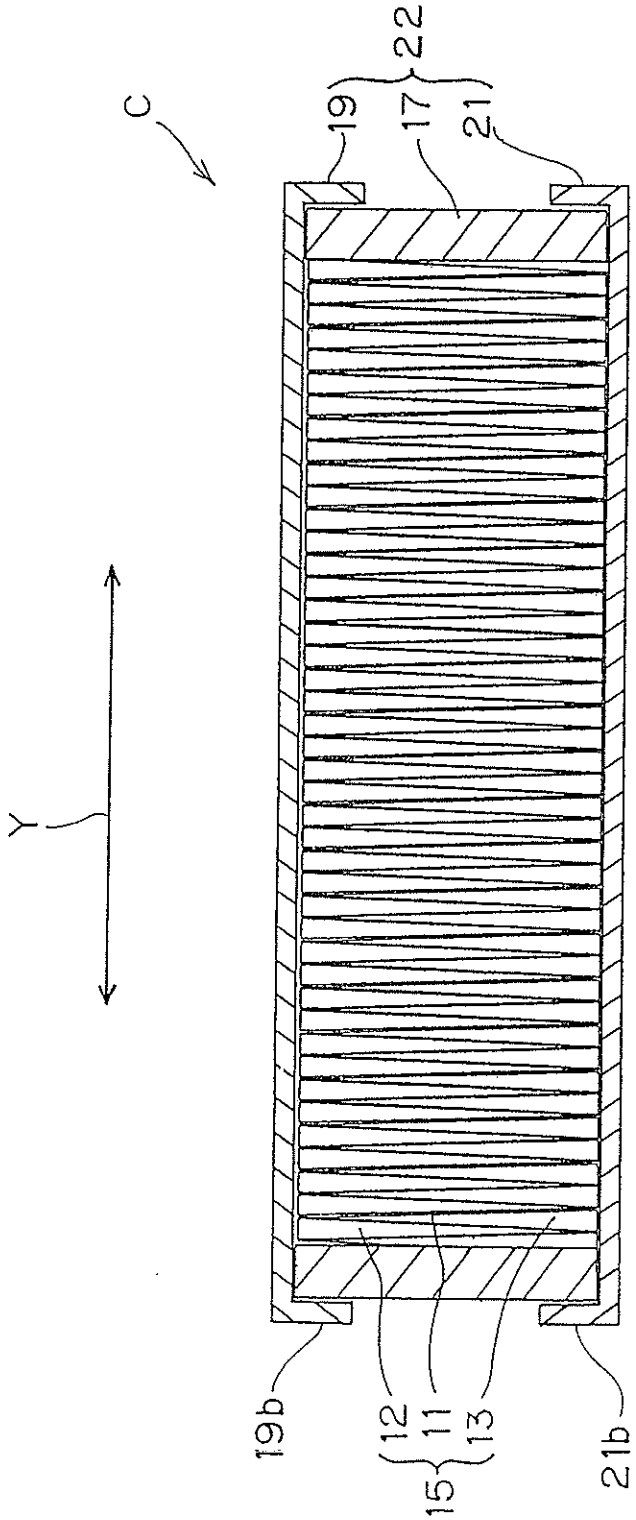

Fig. 2

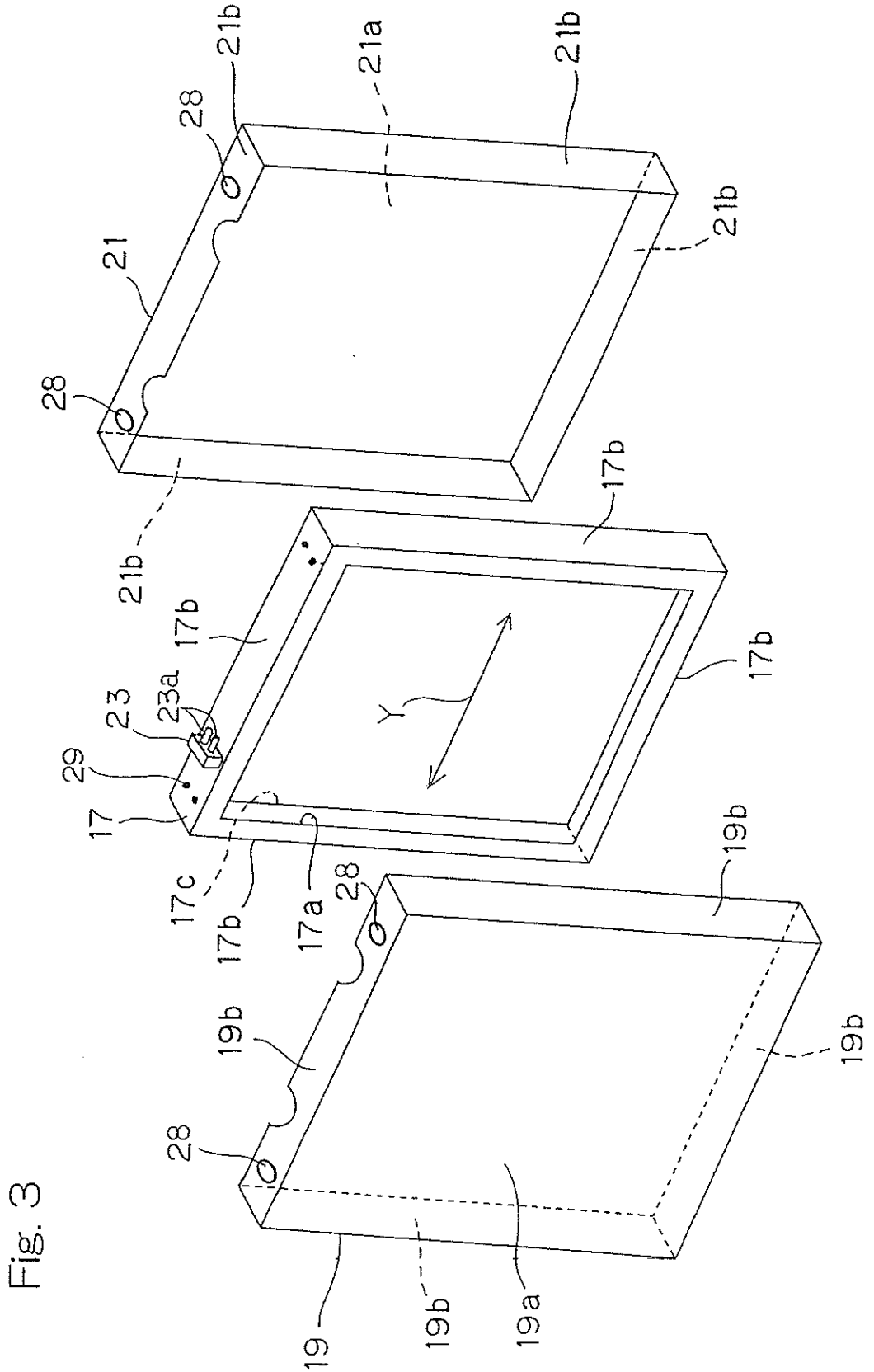
21b
21a
21b
28
21
21b
28
21b
17b
17b
23
23a
29
17
Y
17b
17c
17b
17a
28
19b
19b
28
19b
19
19b
19a

Fig. 3

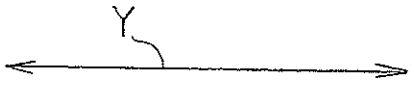

Fig. 4A

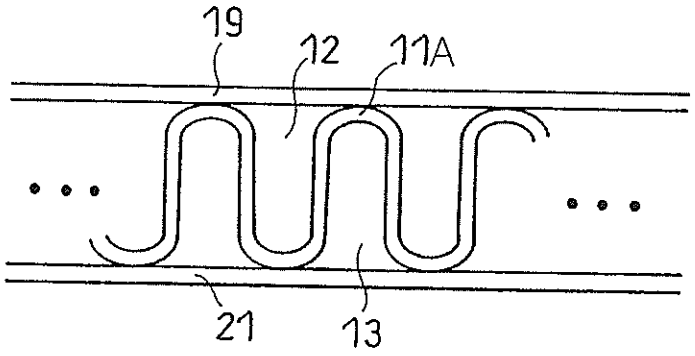

Fig. 4B

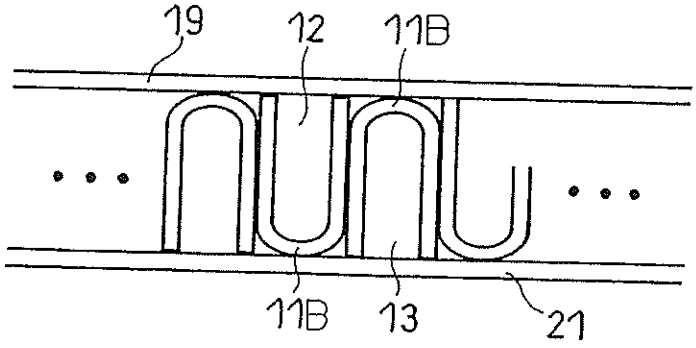

Fig. 4C

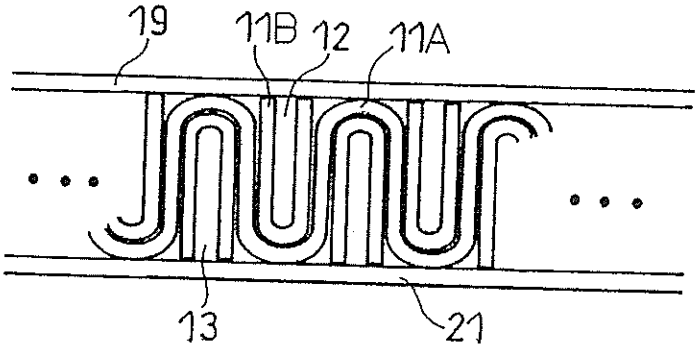

Fig. 5A

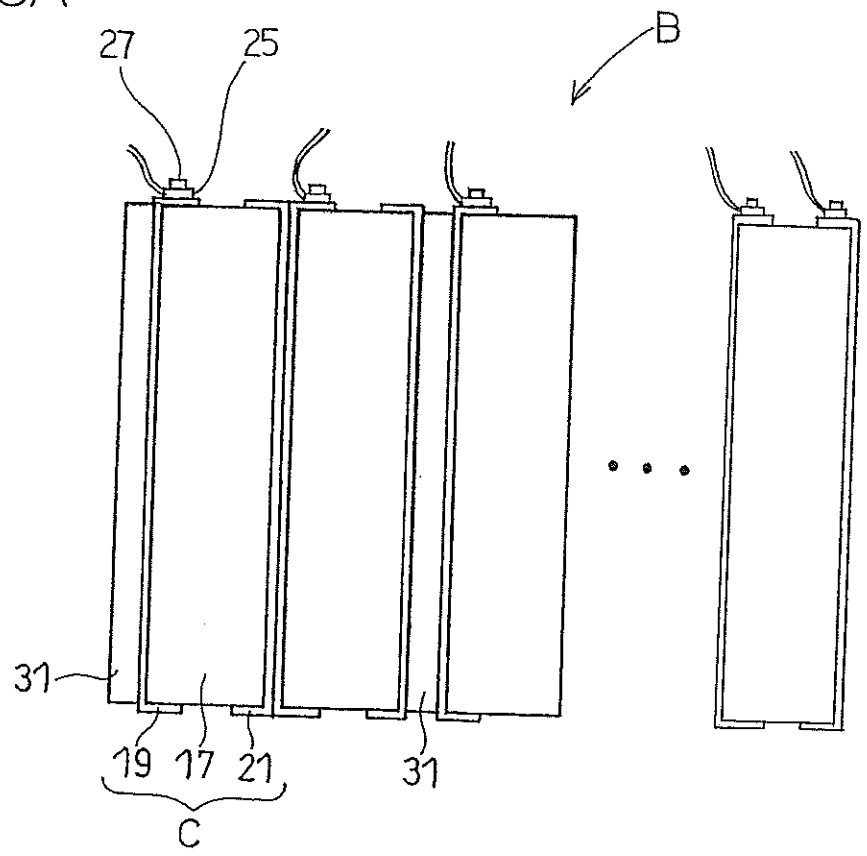

Fig. 5B

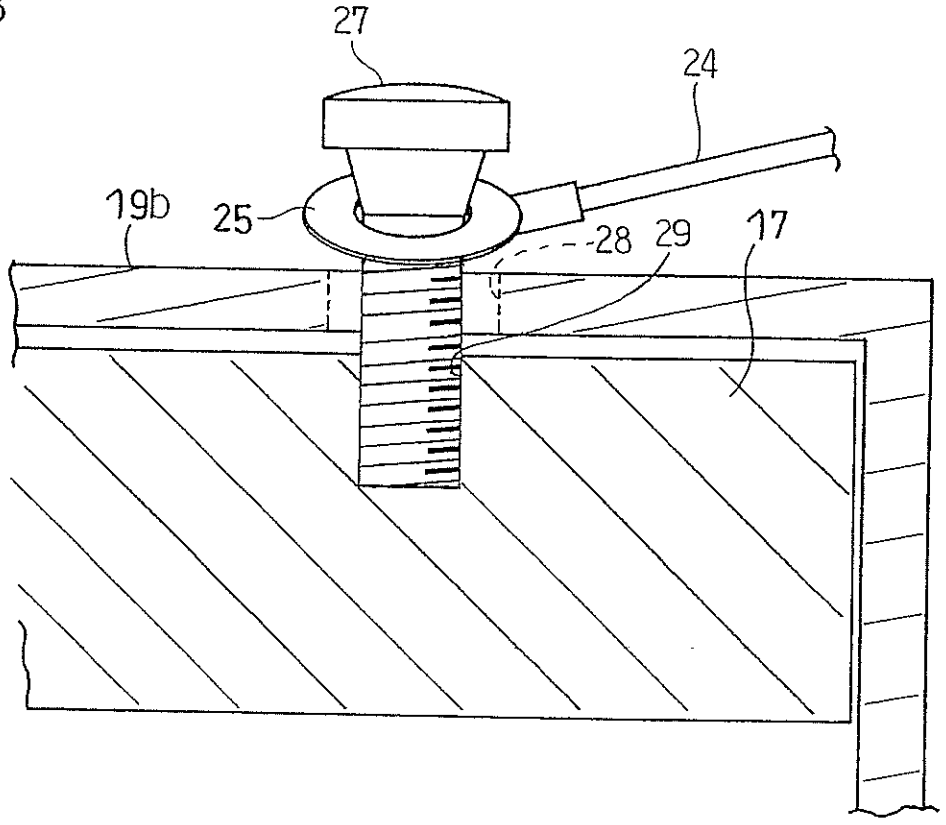

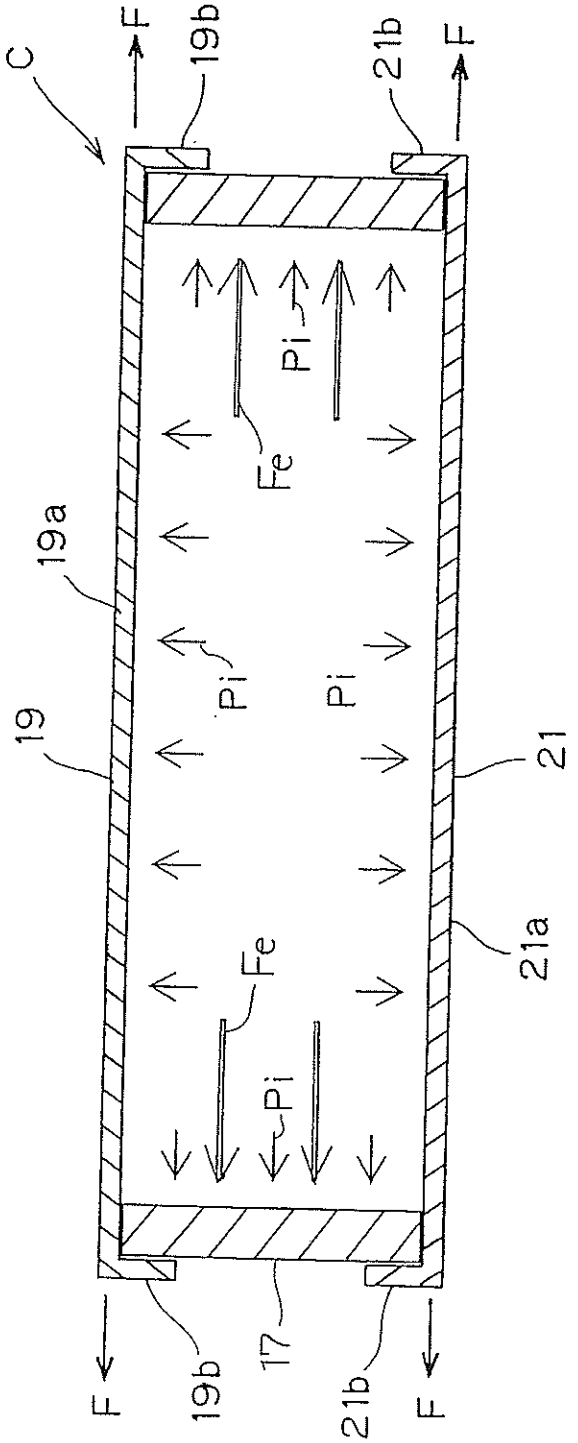

Fig. 6

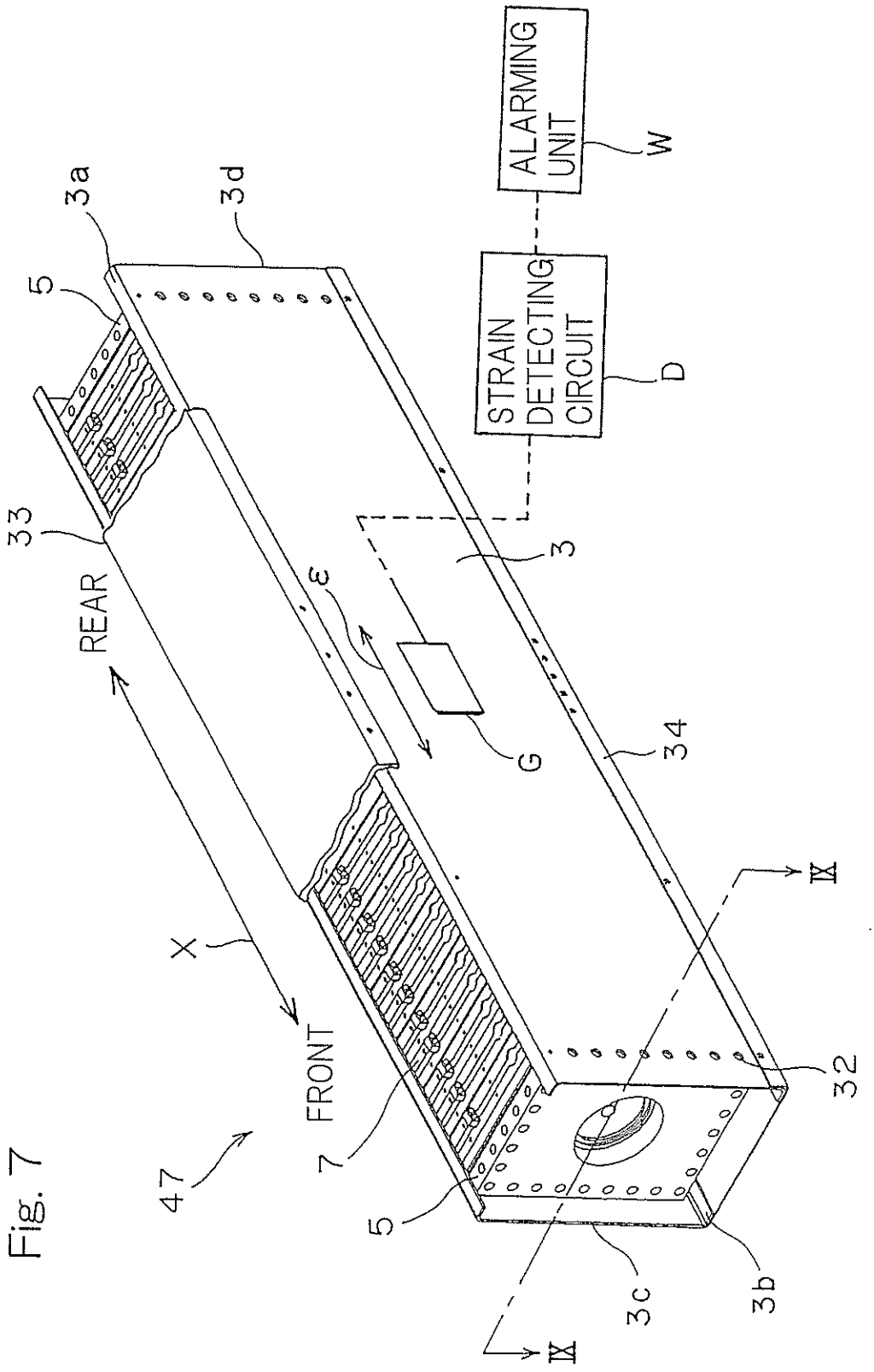
ALARMING UNIT
W
STRAIN DETECTING CIRCUIT
D
3a
3d
5
33
REAR
ε
3
G
34
X
FRONT
47
7
5
IX
IX
32
3c
3b

Fig. 7

Fig. 8

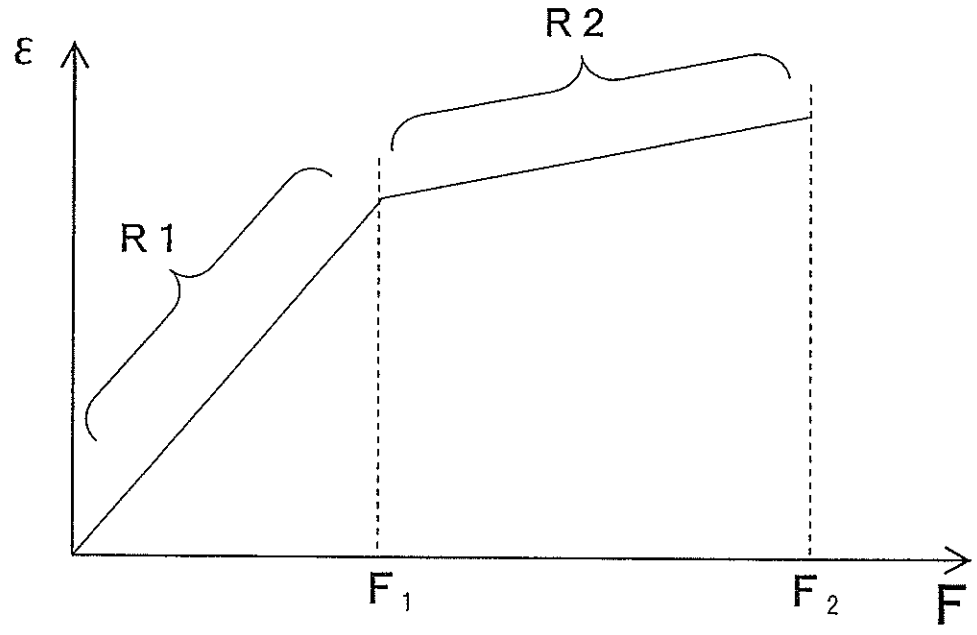

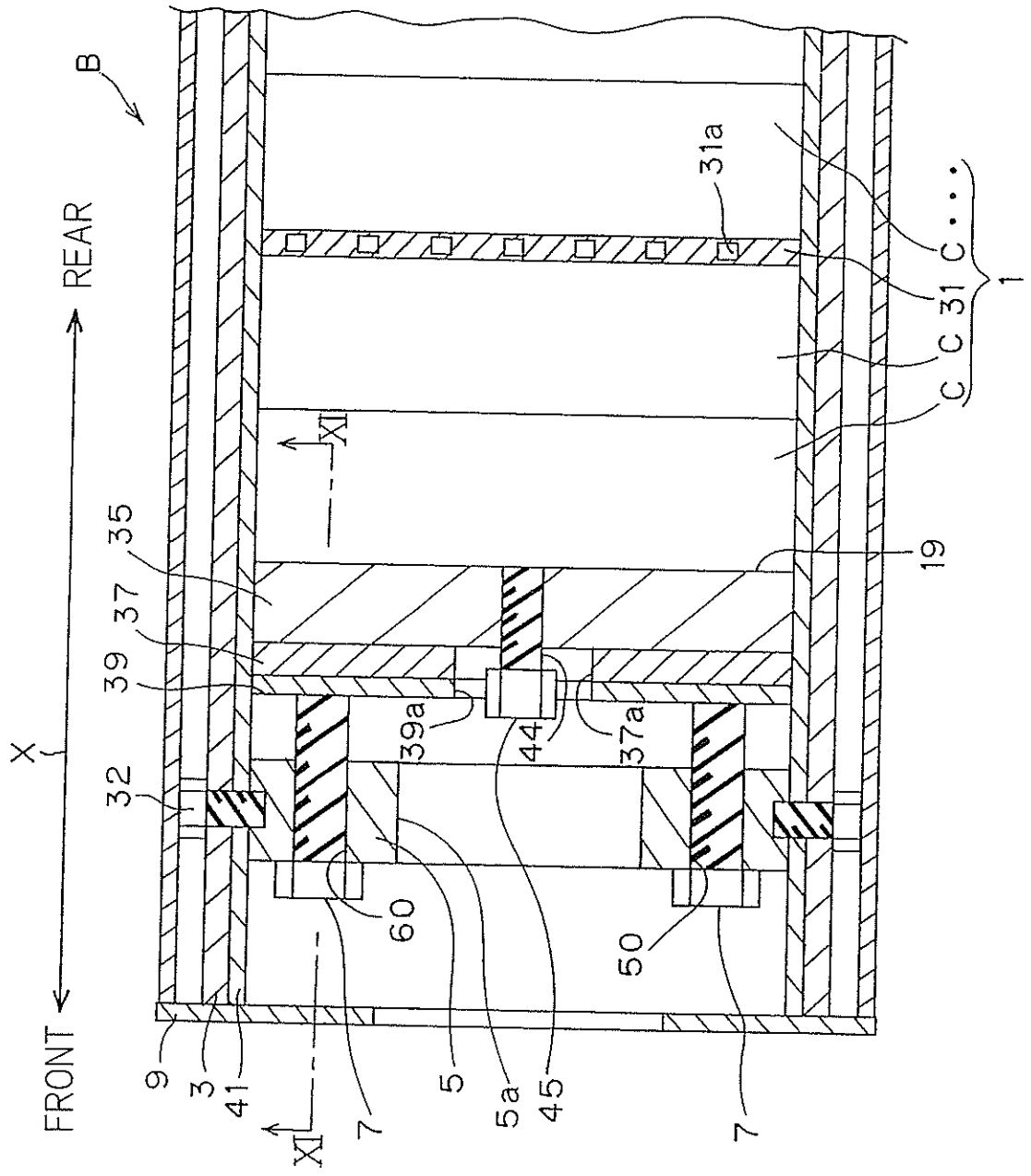
B
REAR
FRONT
X
31a
C
C
C
31
1
19
35
37
39
39a
44
37a
32
60
50
9
3
41
7
5
5a
45
7
XI
XI

Fig. 9

Fig. 10A

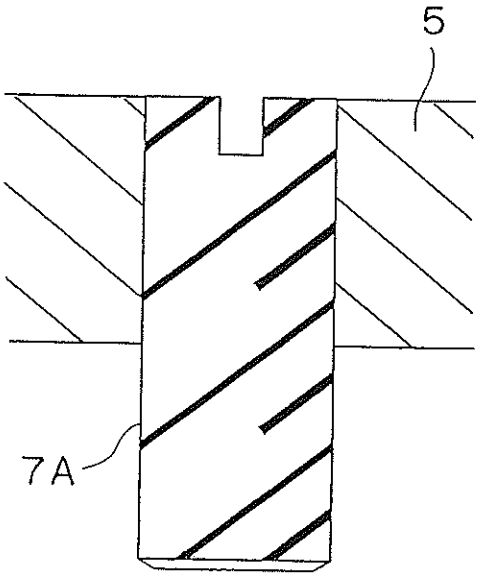

Fig. 10B

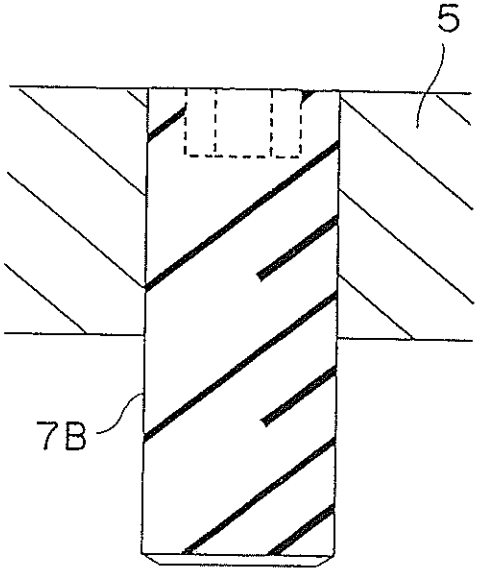

Fig. 11

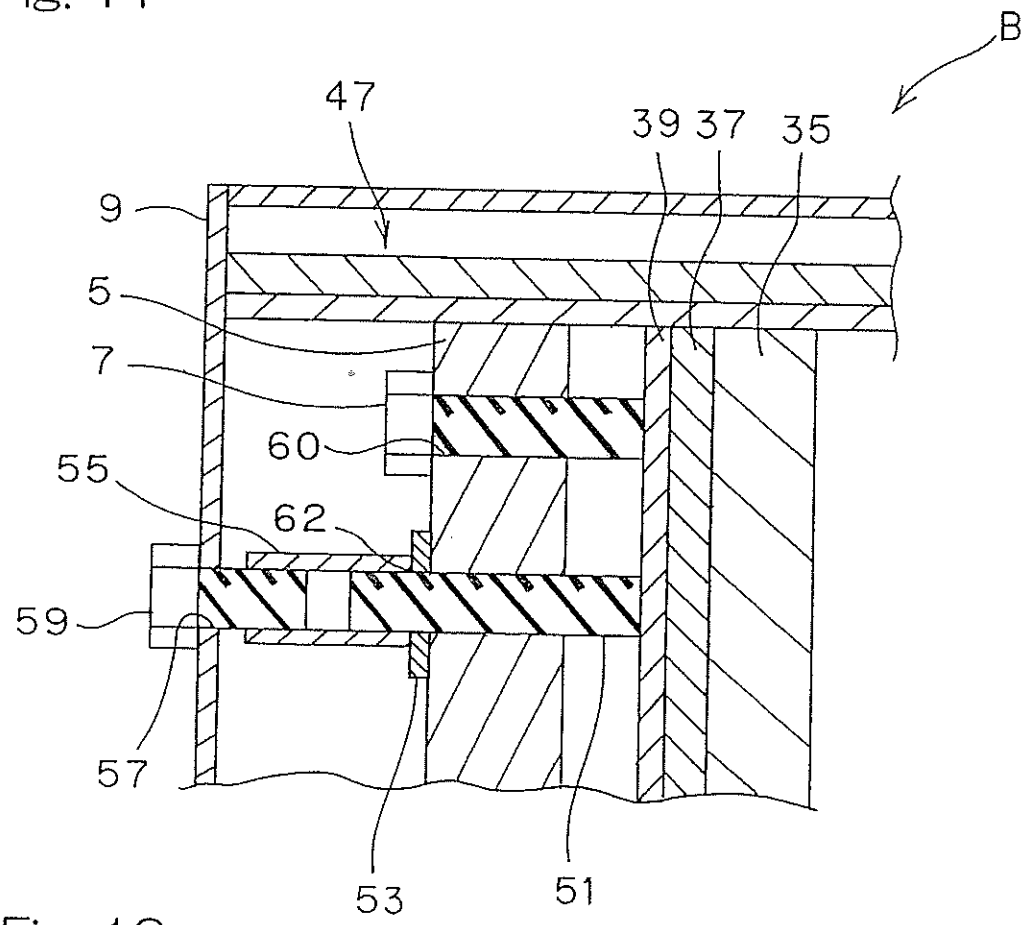

Fig. 12

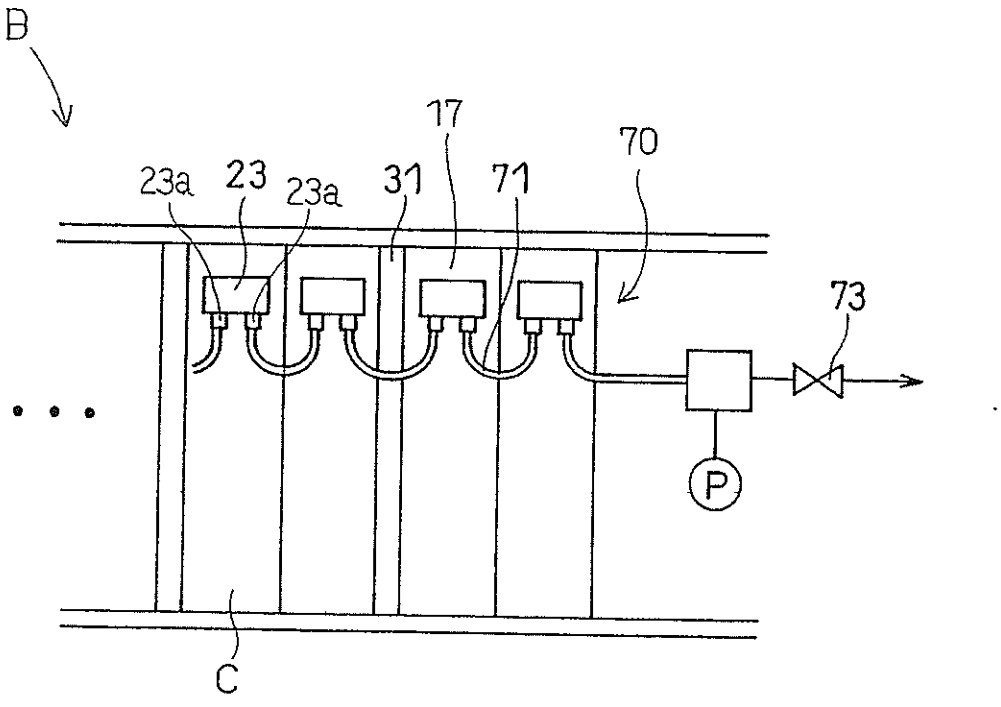

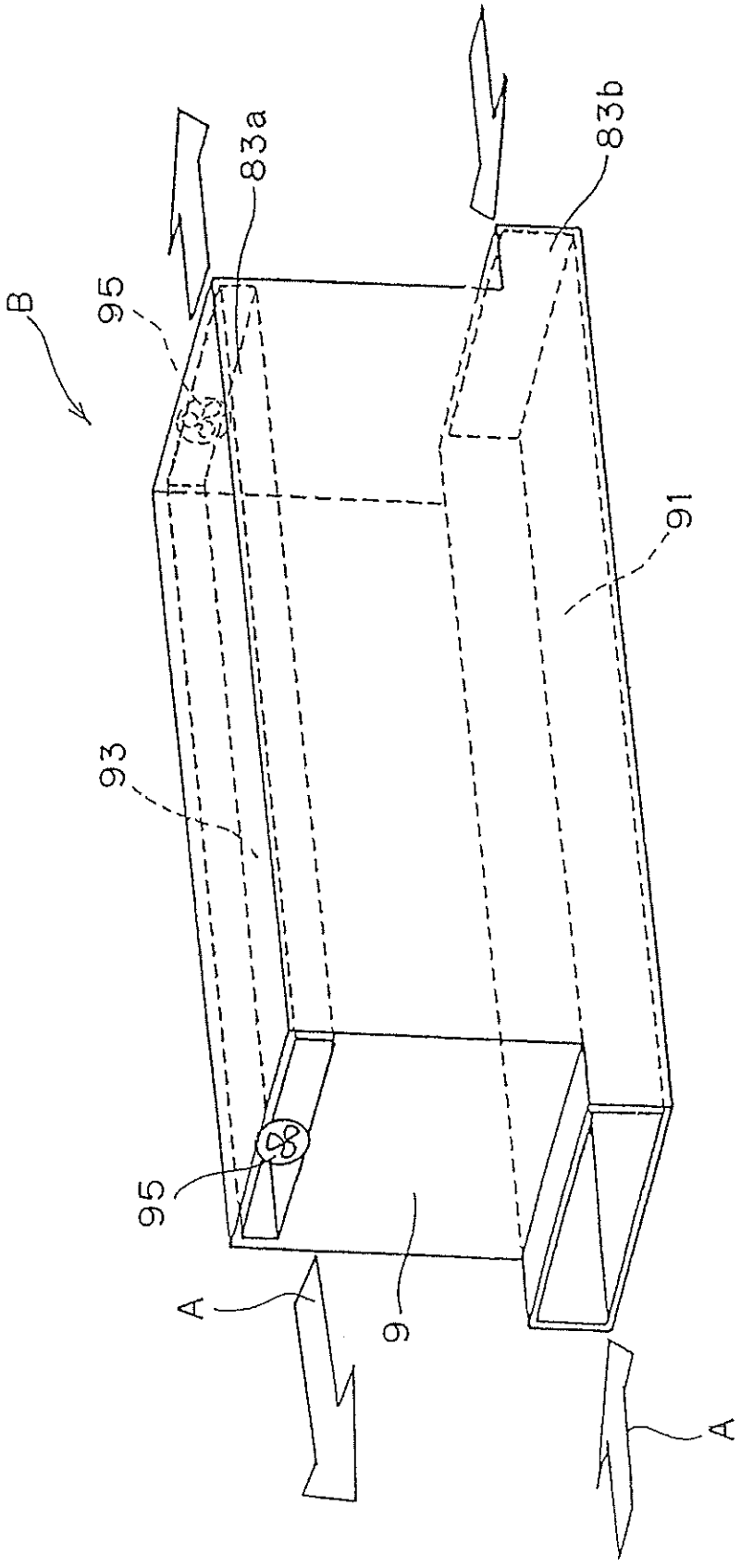

Fig. 13