9901482-1
IPOS

PCT

WORLD INTELLECTUAL PROPERTY ORGANIZATION
International Bureau

INTERNATIONAL APPLICATION PUBLISHED UNDER THE PATENT COOPERATION TREATY (PCT)

(51) International Patent Classification 6 : F23J 1/06, F23M 7/00

A1

(11) International Publication Number: WO 98/16781

(43) International Publication Date: 23 April 1998 (23.04.98)

(21) International Application Number: PCT/US97/18673

(22) International Filing Date: 14 October 1997 (14.10.97)

(30) Priority Data:
60/028,379 15 October 1996 (15.10.96) US

(71) Applicant: RELIABILITY INCORPORATED [US/US]; 16400 Park Row, Houston, TX 77084 (US).

(72) Inventors: LILLJA, Charles; 8814 Hazen Street, Houston, TX 77036 (US). HUGH, David, Roy; 14114 Longbourne Drive, Houston, TX 77077 (US).

(74) Agents: SMITH, E., Randall et al.; Conley, Rose & Tayon, P.C., P.O. Box 3267, Houston, TX 77253–3267 (US).

(81) Designated States: JP, KR, SG.

Published
With international search report.

(54) Title: EXPANDABLE PANEL FOR ENVIRONMENTALLY CONTROLLABLE CHAMBER

(57) Abstract
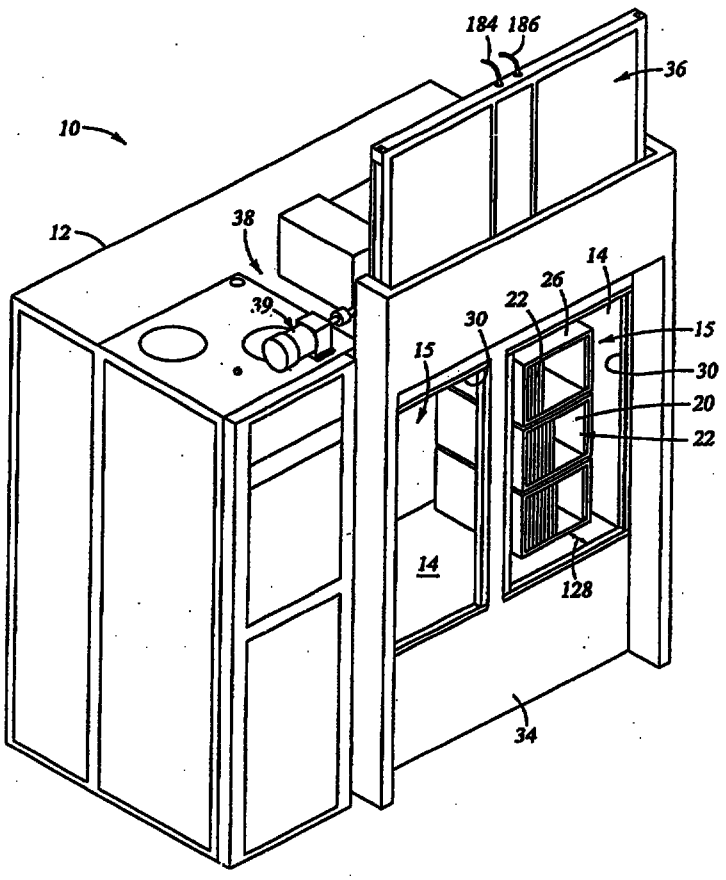
An apparatus having at least one environmentally controllable chamber (14) with an opening includes a chamber opening covering (36) having at least one expandable portion (120) that is covering actuator (38) enables movement of the covering between at least one open position and a closed position relative to the opening. The open position of the chamber opening covering allows at least partial access to the chamber through the opening.