FIG. 1

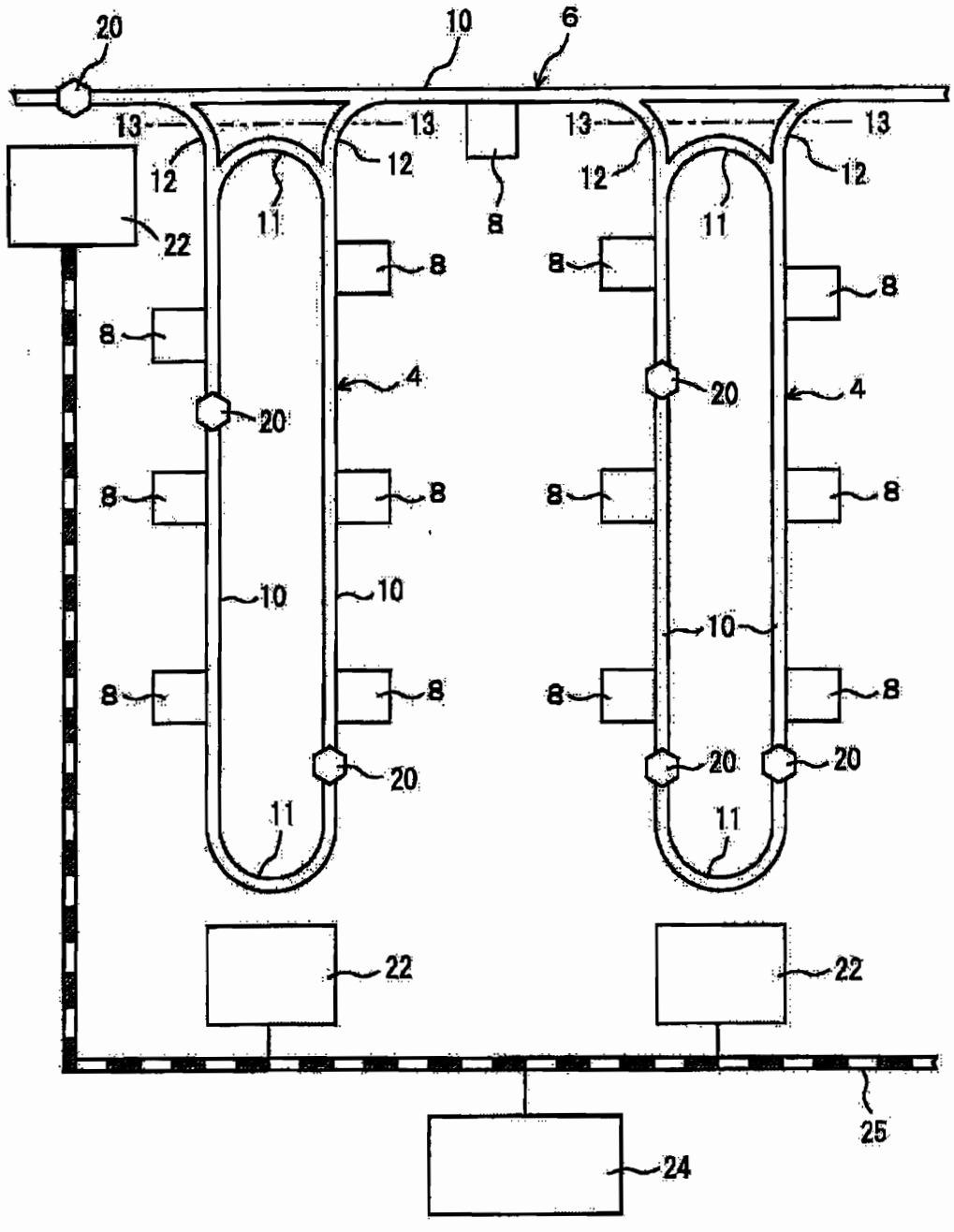

2

FIG. 2

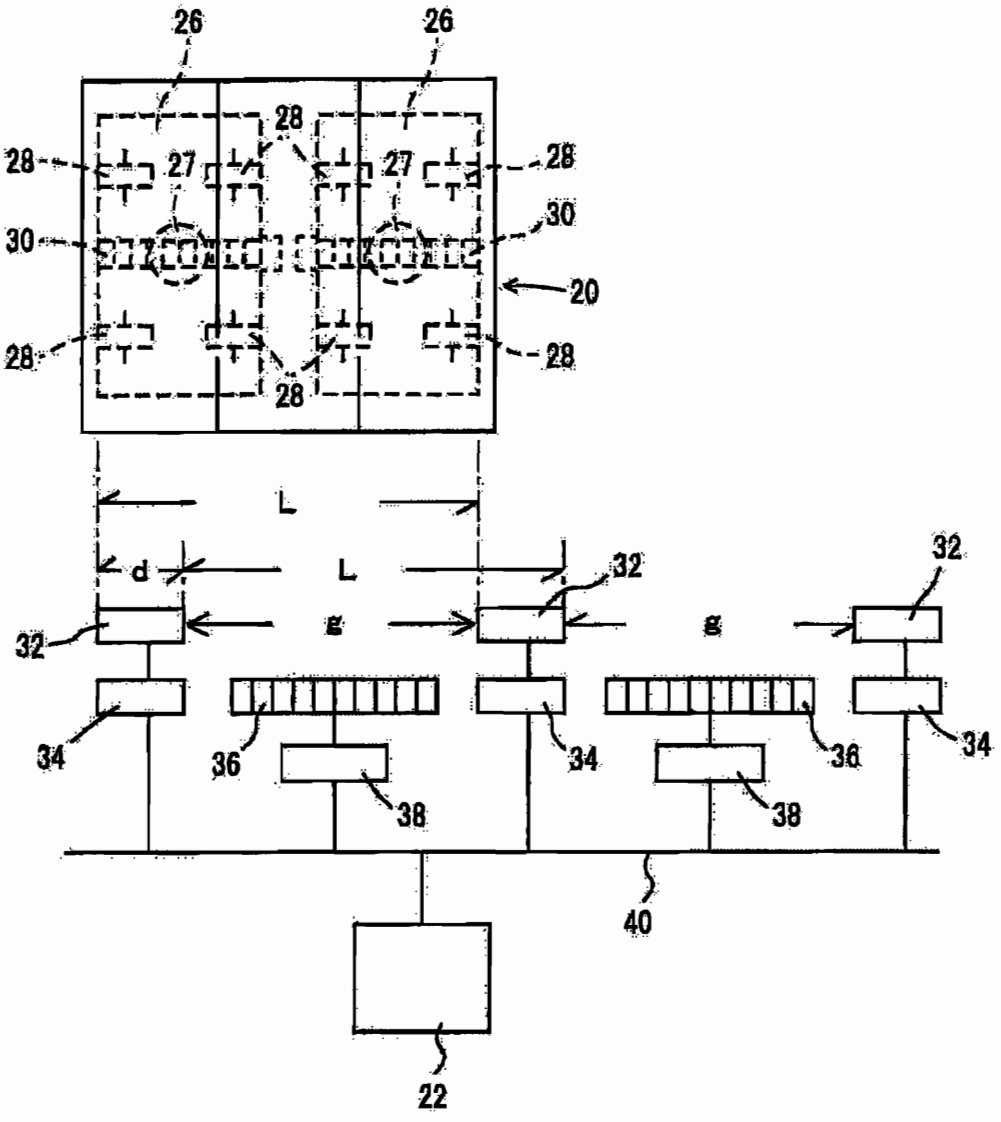
26
26
28
28
27
27
28
30
30
20
28
28
28
L
d
L
32
32
32
g
g
34
36
34
36
34
38
38
40
22

FIG. 3

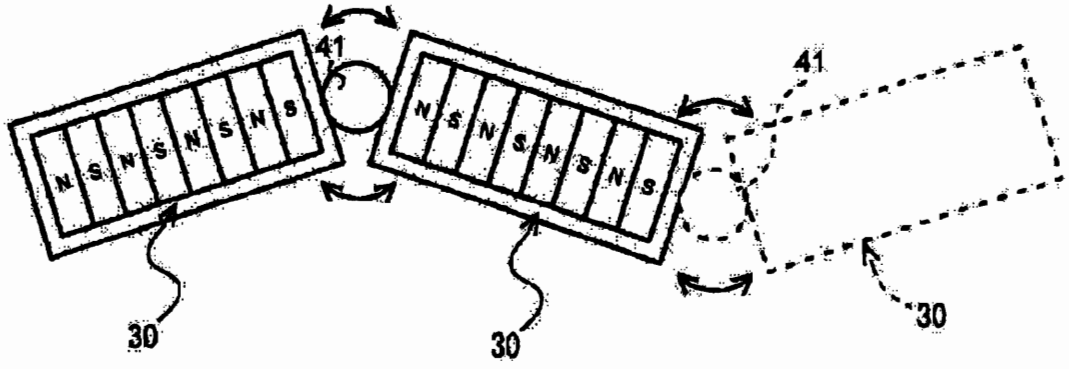
41
41
N
S
30
30
30

FIG. 4

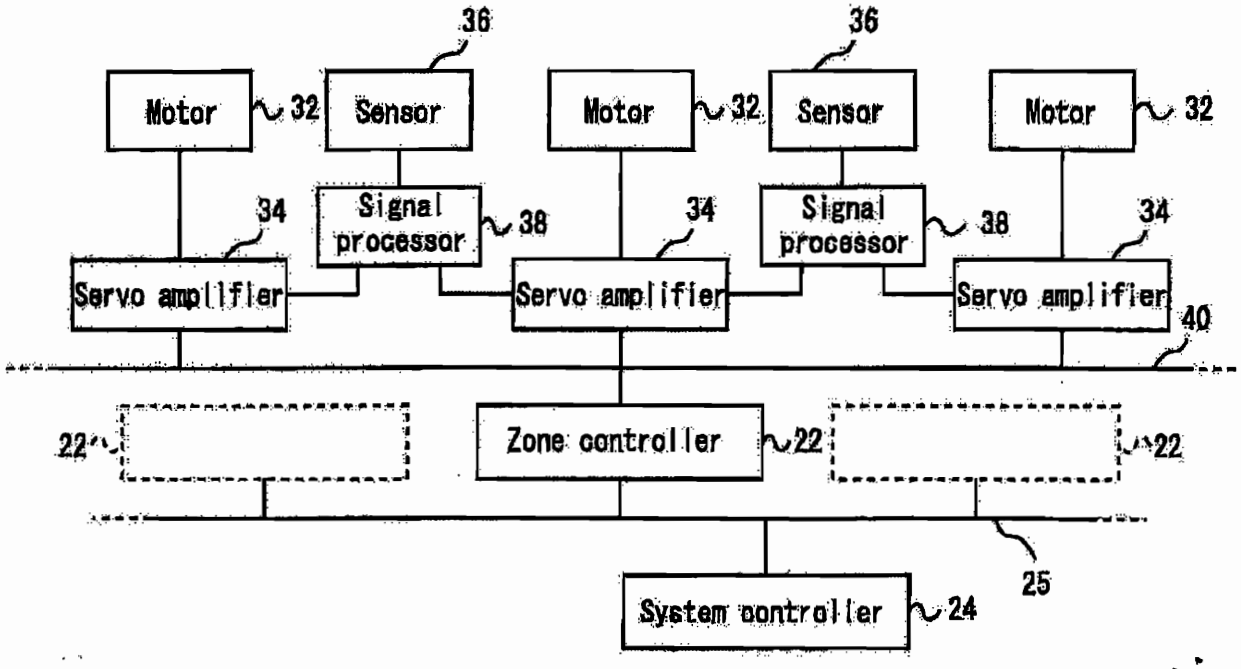

FIG. 5

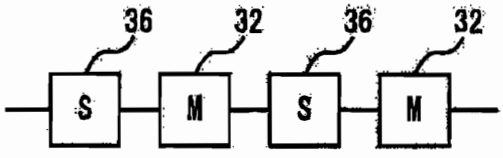

FIG. 6

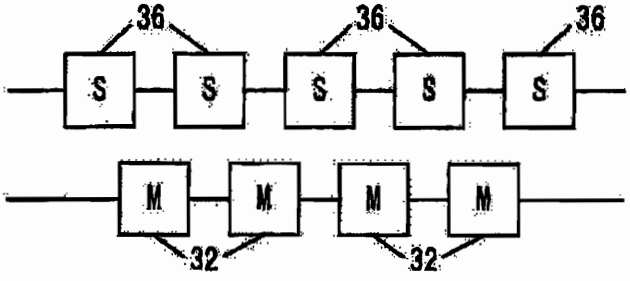

FIG. 7

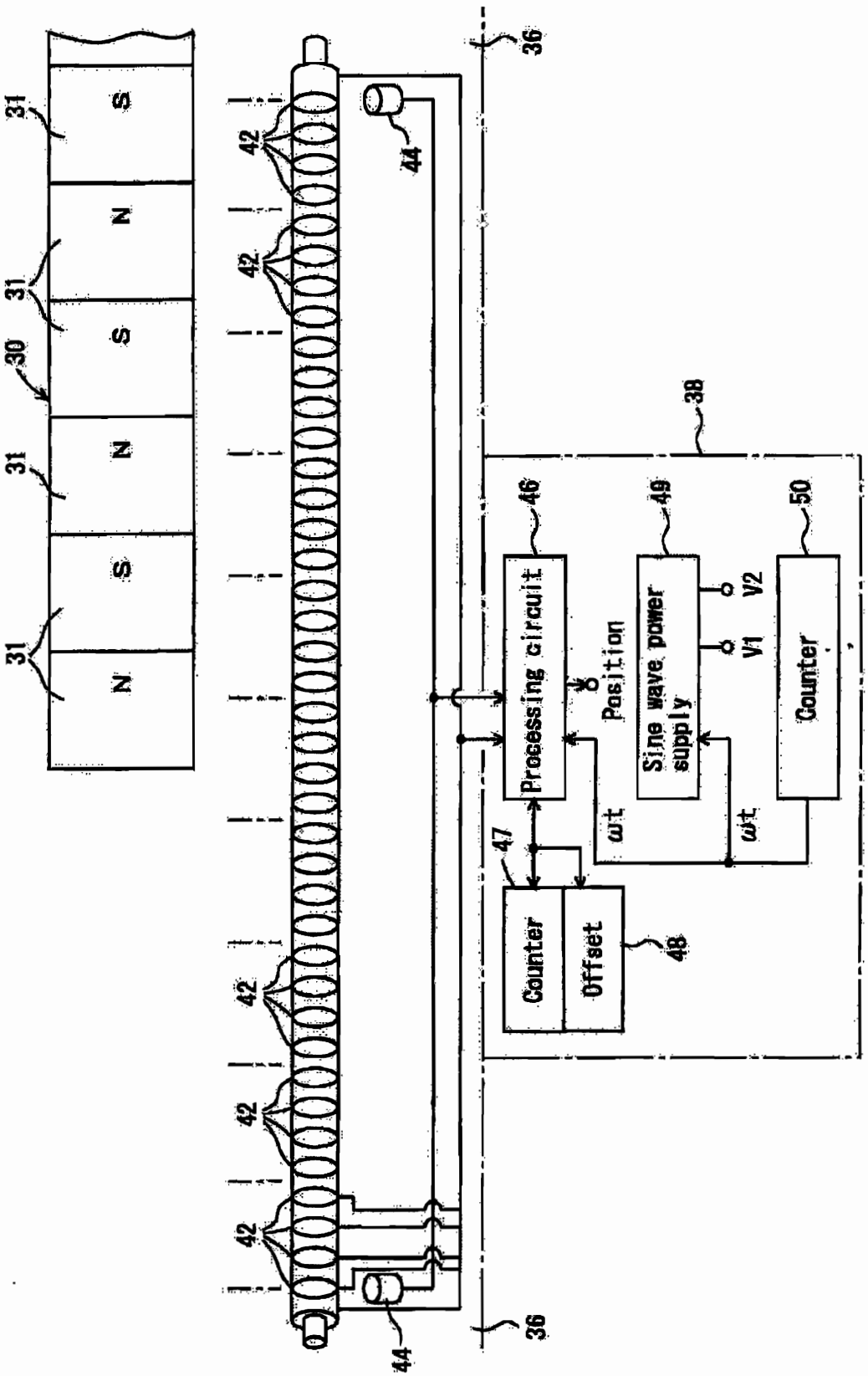
31
S
N
S
N
S
N
30
42
44
36
38
46
Processing circuit
Position
ωt
47
Counter
Offset
48
49
Sine wave power supply
V1
V2
50
Counter

FIG. 8

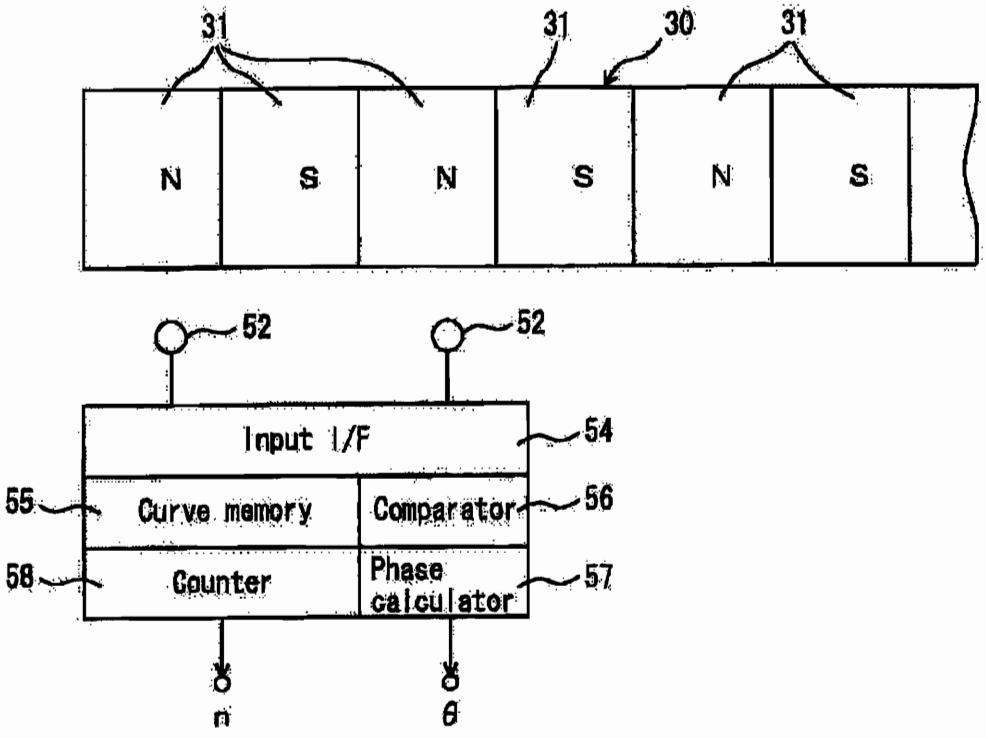
31
31
30
31
N
S
N
S
N
S
52
52
Input I/F
54
55
Curve memory
Comparator
56
58
Counter
Phase calculator
57
n
θ

FIG. 9

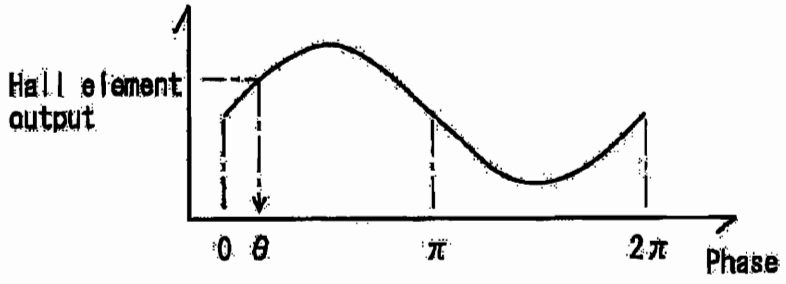
Hall element output
0
θ
π
2π
Phase

FIG. 10

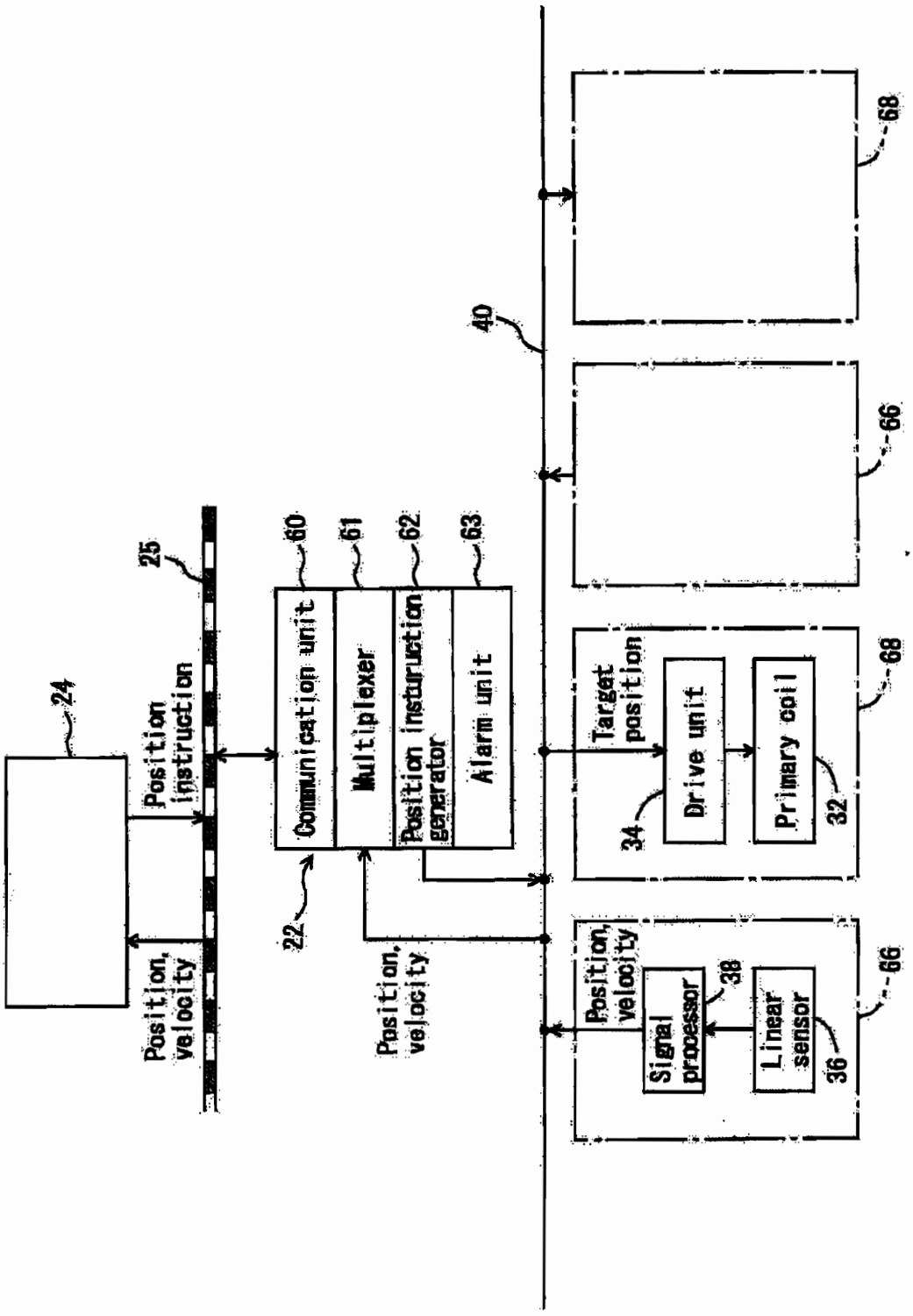
24
Position instruction
25
Position, velocity
22
60
Communication unit
61
Multiplexer
62
Position instruction generator
63
Alarm unit
Position, velocity
40
Target position
34
Drive unit
Primary coil
32
68
Position, velocity
Signal processor
38
Linear sensor
36
66
66
68

FIG. 11

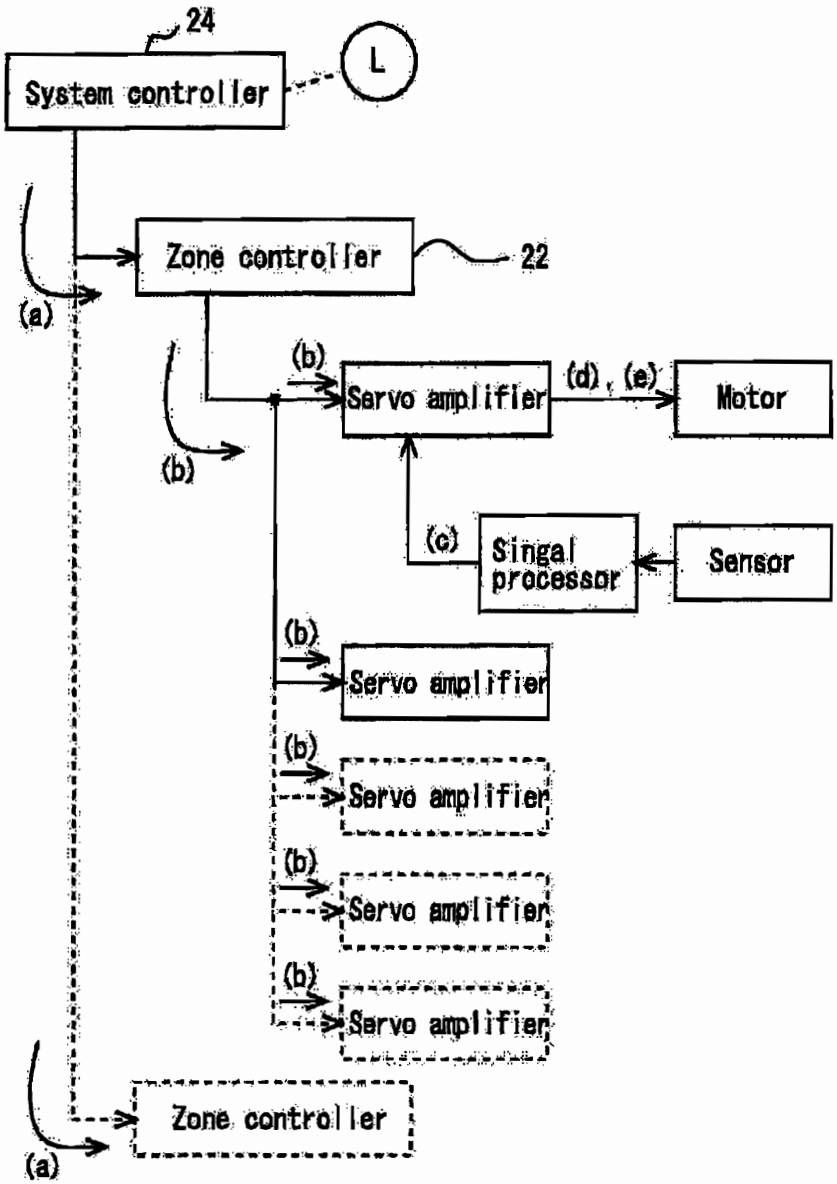
24
System controller
L
Zone controller
22
(a)
(b)
(b)
Servo amplifier
(d), (e)
Motor
(c)
Singal processor
Sensor
(b)
Servo amplifier
(b)
Servo amplifier
(b)
Servo amplifier
(b)
Servo amplifier
Zone controller
(a)

FIG. 12

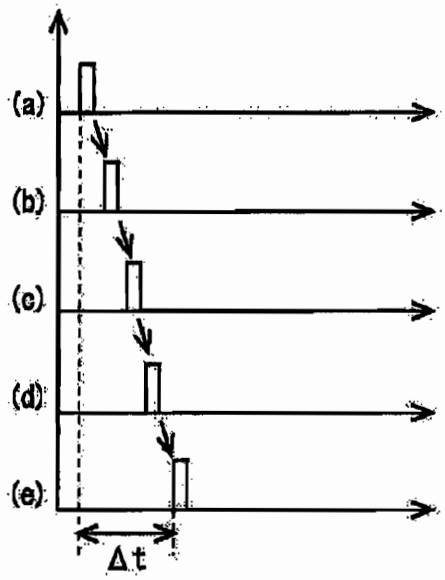

FIG. 13

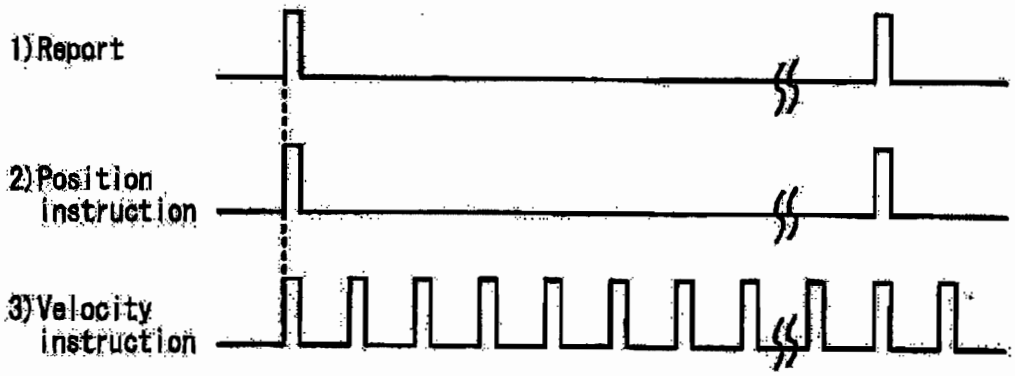

FIG. 14

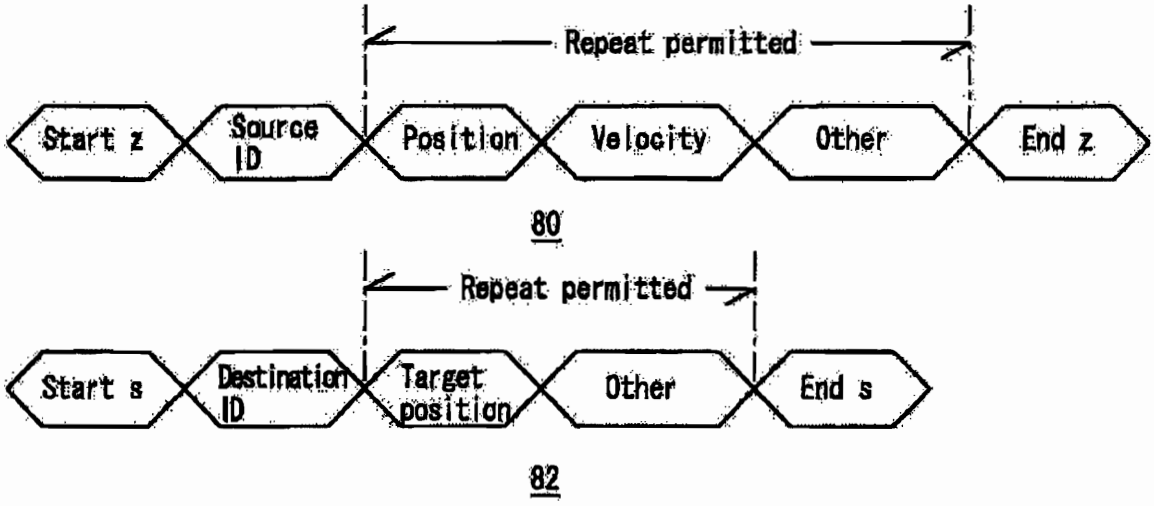

FIG. 15

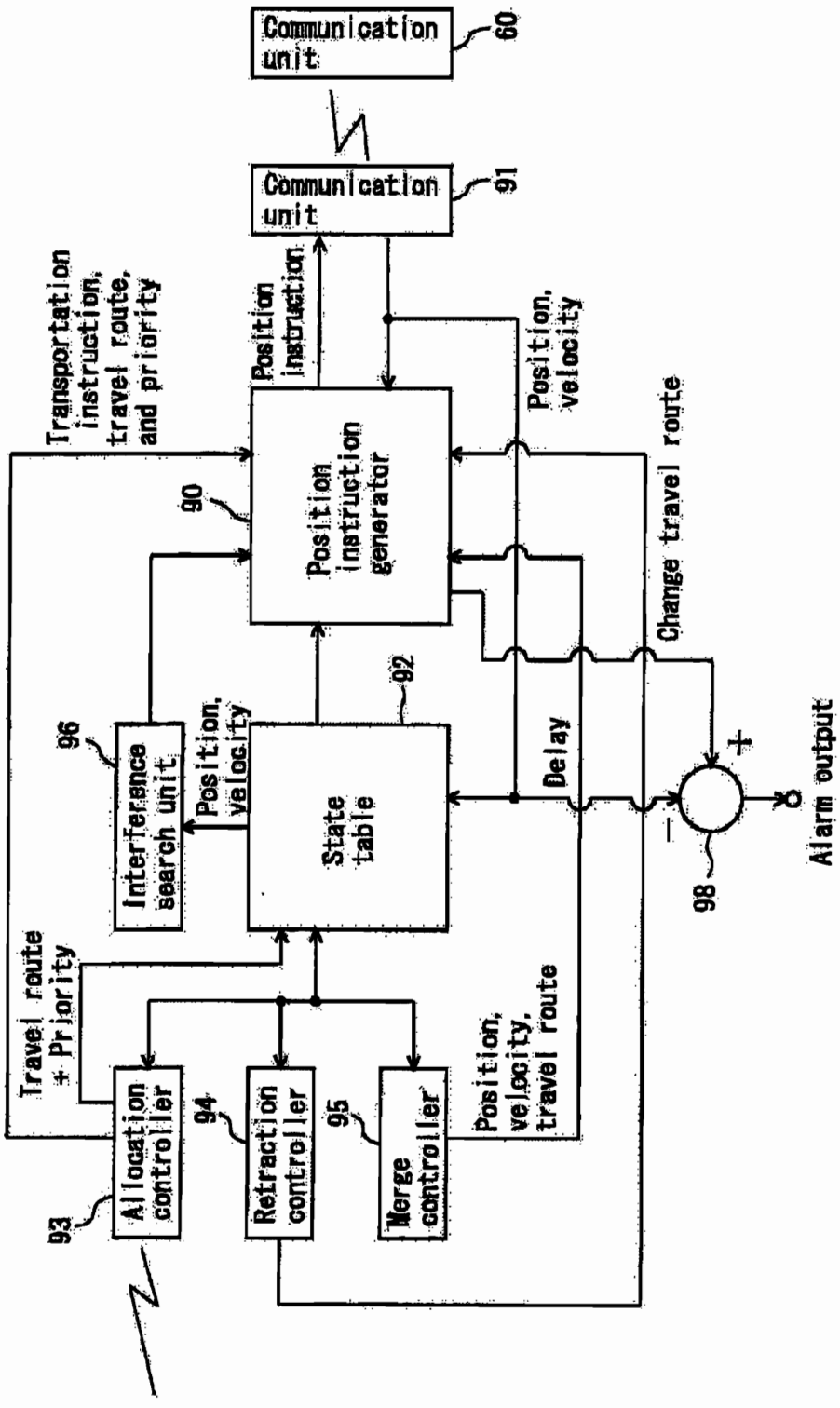
Communication unit
60
Communication unit
91
Transportation instruction, travel route, and priority
Position instruction
Position, velocity
Position instruction generator
90
Change travel route
96
Interference search unit
Position, velocity
State table
92
Delay
Travel route + Priority
Allocation controller
93
Retraction controller
94
Merge controller
95
Position, velocity, travel route
98
Alarm output
24